No. PF-42PA

TCM®

PARTS CATALOGUE

FORKLIFT TRUCK

DIESEL POWERED

FD30C7
FD30T7
FD30W7

TCM CORPORATION

ご使用のまえに

このパーツカタログは，TCM フォークリフトの構成部品を収録しています。

部品ご注文について

部品ご注文の際は，必ず車両の形式・仕様・製造番号（号車），部品番号および注文数を明示してください。車両の製造番号（号車）は車両銘板に表示しています。

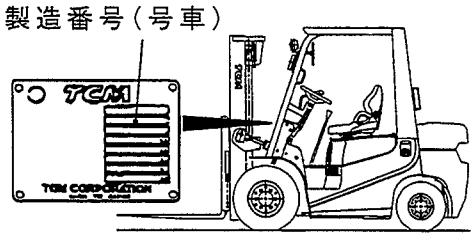

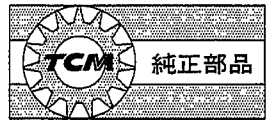

部品は，必ず「TCM 純正部品」をご使用ください。
純正部品以外の部品をご使用になり，故障が発生した場合は保証できません。

ご使用について

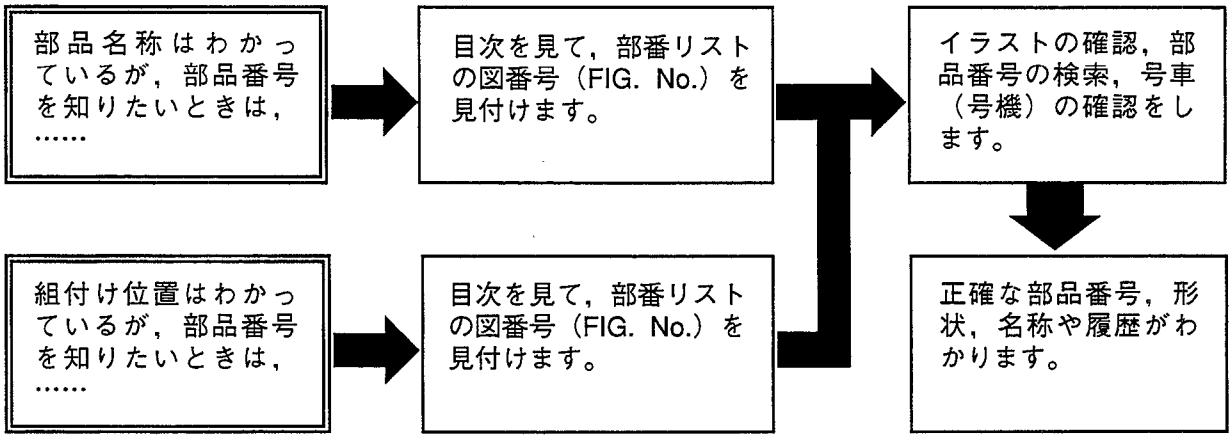

略語および記号

ＡＳＳＹ	組立品を示します。
ＲＨ	車両の前方向に向かって右側を示します。
ＬＨ	車両の前方向に向かって左側を示します。
ＡＲ	必要に応じた数を使用します。
＊	セットおよびキットの販売部品を示します。
Ｔ	厚みを示します。
＋	図示していません。
＃	単体販売しません。

部品は，品質向上のため予告なく変更することがありますので，あらかじめご了承ください。
詳細は，TCM 指定整備工場にご相談ください。

INTRODUCTION

This Parts Catalogue contains the component parts of the **TCM FORKLIFT TRUCK**.

How to order parts

When ordering, be sure to specify the model name, specification and serial number (machine number) of your machine, as well as the part number and desired quantity for each part. The machine serial number (machine number) is indicated on the machine name plate.

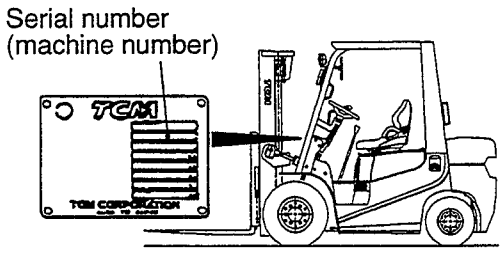

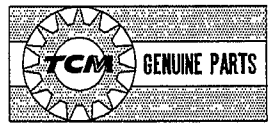

Always use "TCM's Genuine Parts". We cannot guarantee any loss or trouble attributable to other parts than ours.

How to use the Parts Catalogue

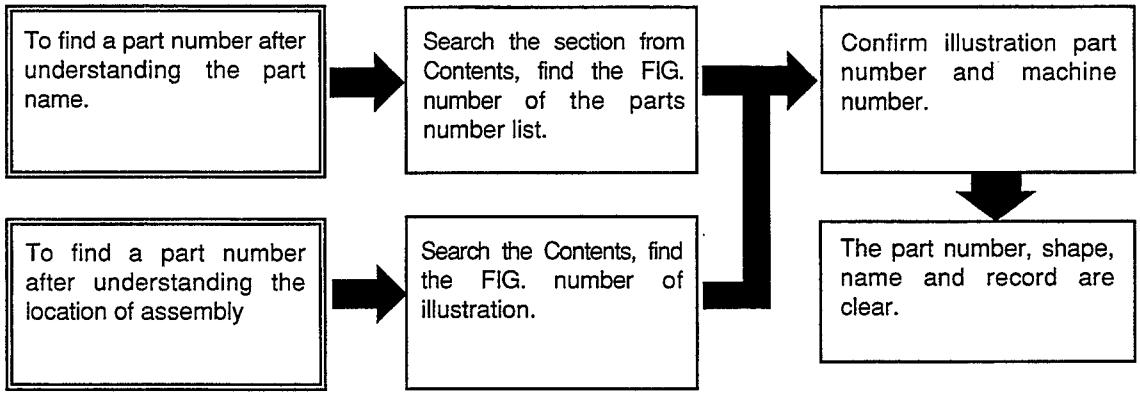

Abbreviations and symbols

ASSY ···	Assembled unit.
RH ·····	Right-hand when viewed forward on the truck.
LH ·····	Left-hand when viewed forward on the truck.
AR ·····	Quantity required.
* ·····	The marketable part set or kit.
T ·····	Thickness.
+ ·····	Not illustrated.
# ·····	Not sold separately.

Materals and specifications subject to change without notice.

CONTENTS 目次

CHASSIS シャーシ

a	FD30C7
b	FD30T7
c	FD30W7

SECTION 部門	a	b	c	FIG.NO.
ENGINE MOUNT エンジンマウント	○	○	○	1
AIR CLEANER エアークリーナ	○	○	○	2
AIR DUCT エアーダクト	○	○	○	3
PRE CLEANER [CAKB] プレクリーナ	○	○	○	4
COOLING UNIT (CLUTCH) クーリングユニット	○			5
COOLING UNIT (TOR-CON)(OIL CLUTCH) クーリングユニット		○	○	6
RADIATOR PARTS & RESERVE TANK ラジエータパーツ&リザーブタンク	○	○	○	7
FAN SHROUD (CLUTCH)(TOR-CON) ファンシュラウド	○	○		8
FAN SHROUD (OIL CLUTCH) ファンシュラウド			○	9
FUEL SYSTEM (SUPPLY) フューエルシステム	○	○	○	10
FUEL SYSTEM (SUCTION) フューエルシステム	○	○	○	11
EXHAUST SYSTEM エキゾーストシステム	○	○	○	12
EXHAUST SYSTEM [DPF] エキゾーストシステム	○	○	○	13
POST & TAIL [TUE] ポスト&テイル	○	○	○	14
POST & TAIL [TUE/(EXB,EXC,EXE,EXK,EXN)] ポスト&テイル	○	○		15
WIRE HARNESS [DPF] ワイヤハーネス	○	○	○	16
FRONT TUBE & JOINT [DPF] フロントチューブ&ジョイント	○	○	○	17
COMBINATION METER コンビネーションメータ	○	○	○	18
STEERING SHAFT COVER (CLUTCH)(OIL CLUTCH) ステアリングシャフトカバー	○		○	19
STEERING SHAFT COVER (TOR-CON) ステアリングシャフトカバー		○		20
ELECTRIC PARTS エレクトリックパーツ	○	○	○	21

CONTENTS 目次

CHASSIS シャーシ

a	FD30C7
b	FD30T7
c	FD30W7

SECTION 部門	a	b	c	FIG. NO.
BATTERY ﾊﾞｯﾃﾘ	○	○	○	22
FRONT GUARD WIRE HARNESS (CLUTCH & OIL CLUTCH) ﾌﾛﾝﾄｶﾞｰﾄﾞﾜｲﾔﾊｰﾈｽ	○		○	23
FRONT GUARD WIRE HARNESS (TOR-CON) ﾌﾛﾝﾄｶﾞｰﾄﾞﾜｲﾔﾊｰﾈｽ		○		24
ENGINE WIRE HARNESS (CLUTCH)(OIL CLUTCH) ｴﾝｼﾞﾝﾜｲﾔﾊｰﾈｽ	○		○	25
ENGINE WIRE HARNESS (TOR-CON) ｴﾝｼﾞﾝﾜｲﾔﾊｰﾈｽ		○		26
LIGHT UNIT ﾗｲﾄﾕﾆｯﾄ	○	○	○	27
BACK BUZZER ﾊﾞｯｸﾌﾞｻﾞｰ	○	○	○	28
LICENSE LIGHT ﾗｲｾﾝｽﾗｲﾄ	○	○	○	29
LICENSE LIGHT [SCB001/RRE] ﾗｲｾﾝｽﾗｲﾄ	○	○	○	30
LICENSE LIGHT [RRE/RW] ﾗｲｾﾝｽﾗｲﾄ	○	○	○	31
LICENSE LIGHT [TUE/RRE] ﾗｲｾﾝｽﾗｲﾄ	○	○	○	32
REAR WORKING LIGHT [RWLR] ﾘﾔｰﾜｰｷﾝｸﾞﾗｲﾄ	○	○	○	33
REAR WORKING LIGHT [RWLL] ﾘﾔｰﾜｰｷﾝｸﾞﾗｲﾄ	○	○	○	34
REAR WORKING LIGHT [RWL2] ﾘﾔｰﾜｰｷﾝｸﾞﾗｲﾄ	○	○	○	35
REVOLVING LIGHT [RLY][RLR] ﾘﾎﾞﾙﾋﾞﾝｸﾞﾗｲﾄ	○	○	○	36
SPOT LIGHT [SPL] ｽﾎﾟｯﾄﾗｲﾄ	○	○	○	37
HEATER UNIT [HR] ﾋｰﾀﾕﾆｯﾄ	○	○	○	38
HEATER VALVE & ELBOW [HR] ﾋｰﾀﾊﾞﾙﾌﾞ&ｴﾙﾎﾞ	○	○	○	39
FAN [FAN] ﾌｧﾝ	○	○	○	40
AMMETER [AM] ｱﾝﾒｰﾀ	○	○	○	41
SPEED METER [SM] ｽﾋﾟｰﾄﾞﾒｰﾀ	○	○	○	42

CONTENTS 目次

CHASSIS シャーシ

a	FD30C7
b	FD30T7
c	FD30W7

SECTION 部門	a	b	c	FIG. NO.
TORQUE CONVERTER THERMOMETER [TTM] トルクコンバータサーモメータ		○		43
TORQUE CONVERTER PRESSURE METER [TPM] トルクコンバータプレッシャメータ		○		44
SPEED DETECTOR UNIT [SAS] スピードディテクタユニット	○	○	○	45
SPEED ALARM SYSTEM [SASB] スピードアラームシステム	○	○	○	46
SPEED ALARM SYSTEM [SASR] スピードアラームシステム	○	○	○	47
SPEED ALARM SYSTEM [SASC] スピードアラームシステム	○	○	○	48
OK MONITOR [OKM] OKモニタ	○	○	○	49
DRIVE UNIT MOUNT (CLUTCH) ドライブユニットマウント	○			50
CLUTCH (CLUTCH) クラッチ	○			51
MISSION CASE (CLUTCH)(OIL CLUTCH) ミッションケース	○		○	52
MISSION GEAR (CLUTCH)(OIL CLUTCH) ミッションギヤー	○		○	53
DRIVE UNIT MOUNT (TOR-CON) ドライブユニットマウント		○		54
TORQUE CONVERTER CASE (TOR-CON) トルクコンバータケース		○		55
CHARGING PUMP (TOR-CON) チャージングポンプ		○		56
MISSION CASE (TOR-CON) ミッションケース		○		57
CLUTCH PACK (TOR-CON) クラッチパック		○		58
CONTROL VALVE (TOR-CON) コントロールバルブ		○		59
REDUCTION リダクション	○	○	○	60
DIFFERENTIAL ディファレンシャル	○	○	○	61
DRIVE UNIT MOUNT (OIL CLUTCH) ドライブユニットマウント			○	62
CLUTCH (OIL CLUTCH) クラッチ			○	63

CONTENTS 目次

CHASSIS シャーシ

a	FD30C7
b	FD30T7
c	FD30W7

SECTION 部門	a	b	c	FIG. NO.
DRIVE AXLE ドライブアクスル	○	○	○	64
WHEEL BRAKE ホイールブレーキ	○	○	○	65
STEERING WHEEL UNIT ステアリングホイールユニット	○	○	○	66
GEAR BOX ギヤーボックス	○	○	○	67
ORBITROL [EXC][EXE][EXK][EXN][OBT] オービットロール	○	○		68
GEAR BOX [(EXC,EXE,EXK,EXN)/PSS] ギヤーボックス	○	○		69
STEERING WHEEL UNIT (TOR-CON):[EXN] ステアリングホイールユニット		○		70
DRAG LINK ドラッグリンク	○	○	○	71
STEERING AXLE ステアリングアクスル	○	○	○	72
STEERING AXLE [EXC][EXE][EXK][EXN][OBT] ステアリングアクスル	○	○		73
STEERING AXLE [(EXC,EXE,EXK,EXN)/PSS] ステアリングアクスル	○	○		74
AXLE SUPPORT アクスルサポート	○	○	○	75
HUB NUT ハブナット	○	○	○	76
FENDER [DD][SDD][TUJSF] フェンダ	○	○	○	77
FRONT WHEEL フロントホイール	○	○	○	78
FRONT WHEEL [TJ F][TJSF][TS F] フロントホイール	○	○	○	79
FRONT WHEEL [TUJF][TUSF][TUWF][TUGF] フロントホイール	○	○	○	80
FRONT WHEEL [TRAF] フロントホイール	○	○	○	81
FRONT WHEEL [TUJSF] フロントホイール	○	○	○	82
FRONT WHEEL [TJ W][TJSW][TS W] フロントホイール	○	○	○	83
FRONT WHEEL [TUJW][TUSW][TUWW][TUGW] フロントホイール	○	○	○	84

CONTENTS 目次

a	FD30C7
b	FD30T7
c	FD30W7

CHASSIS シャーシ

SECTION 部門	a	b	c	FIG. NO.
FRONT WHEEL [TJ W28][TJSW28][TS W28] フロントホイール	○	○	○	85
REAR WHEEL リヤーホイール	○	○	○	86
REAR WHEEL [DR R] リヤーホイール	○	○	○	87
REAR WHEEL [TJ R][TJSR][TS R] リヤーホイール	○	○	○	88
REAR WHEEL [(TJ R,TJSR,TS R)/DR R] リヤーホイール	○	○	○	89
REAR WHEEL [TUJR][TUSR][TUWR][TUGR] リヤーホイール	○	○	○	90
REAR WHEEL [TUJR/DR R] リヤーホイール	○	○	○	91
REAR WHEEL [TRAR] リヤーホイール	○	○	○	92
POWER CYLINDER パワーシリンダ	○	○	○	93
POWER CYLINDER [EXC][EXE][EXK][EXN][OBT] パワーシリンダ	○	○		94
POWER CYLINDER [(EXC,EXE,EXK,EXN)/PSS] パワーシリンダ	○	○		95
POWER CYLINDER BOOT [PSB][FC][RINFC] パワーシリンダブーツ	○	○	○	96
OVERHEAD GUARD オーバヘッドガード	○	○	○	97
OVERHEAD GUARD [EXB][EXC][EXE][EXK][EXN] オーバヘッドガード	○	○		98
FRONT PIPE フロントパイプ	○	○	○	99
REAR PIPE リヤーパイプ	○	○	○	100
REAR PIPE [EXB][EXC][EXE][EXK][EXN] リヤーパイプ	○	○		101
REAR PIPE [RW] リヤーパイプ	○	○	○	102
FRONT LAMP BRACKET フロントランプブラケット	○	○	○	103
FRONT LAMP BRACKET [HL][BKH] フロントランプブラケット	○	○	○	104
REAR LAMP BRACKET リヤーランプブラケット	○	○	○	105

CONTENTS 目次

a	FD30C7
b	FD30T7
c	FD30W7

CHASSIS シャーシ

SECTION 部門	a	b	c	FIG. NO.
HEAD GUARD PARTS ﾍｯﾄﾞｶﾞｰﾄﾞﾊﾟｰﾂ	○	○	○	106
ACCEL PEDAL ｱｸｾﾙﾍﾟﾀﾞﾙ	○	○	○	107
FOOT PEDAL (CLUTCH) ﾌｯﾄﾍﾟﾀﾞﾙ	○			108
FOOT PEDAL (CLUTCH):[PC] ﾌｯﾄﾍﾟﾀﾞﾙ	○			109
FOOT PEDAL (TOR-CON) ﾌｯﾄﾍﾟﾀﾞﾙ		○		110
FOOT PEDAL (OIL CLUTCH) ﾌｯﾄﾍﾟﾀﾞﾙ			○	111
FOOT PEDAL CYLINDER (CLUTCH) ﾌｯﾄﾍﾟﾀﾞﾙｼﾘﾝﾀﾞ	○			112
FOOT PEDAL CYLINDER (CLUTCH):[PC] ﾌｯﾄﾍﾟﾀﾞﾙｼﾘﾝﾀﾞ	○			113
FOOT PEDAL CYLINDER (TOR-CON) ﾌｯﾄﾍﾟﾀﾞﾙｼﾘﾝﾀﾞ		○		114
FOOT PEDAL CYLINDER (OIL CLUTCH) ﾌｯﾄﾍﾟﾀﾞﾙｼﾘﾝﾀﾞ			○	115
BRAKE PIPE (CLUTCH) ﾌﾞﾚｰｷﾊﾟｲﾌﾟ	○			116
BRAKE PIPE (CLUTCH):[PC] ﾌﾞﾚｰｷﾊﾟｲﾌﾟ	○			117
BRAKE PIPE (TOR-CON) ﾌﾞﾚｰｷﾊﾟｲﾌﾟ		○		118
BRAKE PIPE (OIL CLUTCH) ﾌﾞﾚｰｷﾊﾟｲﾌﾟ			○	119
FOOT PEDAL COVER ﾌｯﾄﾍﾟﾀﾞﾙｶﾊﾞｰ	○	○	○	120
BRAKE MASTER CYLINDER ﾌﾞﾚｰｷﾏｽﾀｼﾘﾝﾀﾞ	○	○	○	121
BRAKE LEVER ﾌﾞﾚｰｷﾚﾊﾞｰ	○	○	○	122
FRAME ﾌﾚｰﾑ	○	○	○	123
OIL TANK (CLUTCH)(TOR-CON) ｵｲﾙﾀﾝｸ	○	○		124
OIL TANK (OIL CLUTCH) ｵｲﾙﾀﾝｸ			○	125
OIL CAP & LEVEL ｵｲﾙｷｬｯﾌﾟ&ﾚﾍﾞﾙ	○	○	○	126

CONTENTS 目次

CHASSIS シャーシ

a	FD30C7
b	FD30T7
c	FD30W7

SECTION 部門	a	b	c	FIG. NO.
FUEL TANK フューエルタンク	○	○	○	127
BALANCE WEIGHT バランスウエイト	○	○	○	128
BALANCE WEIGHT [RW] バランスウエイト	○	○	○	129
BALANCE WEIGHT [HC] バランスウエイト	○	○	○	130
FRONT GUARD フロントガード	○	○	○	131
BONNET ボンネット	○	○	○	132
RADIATOR COVER ラジエータカバー	○	○	○	133
RADIATOR COVER [RW] ラジエータカバー	○	○	○	134
RADIATOR COVER [SCB001][SCBCR] ラジエータカバー	○	○	○	135
BONNET HINGE ボンネットヒンジ	○	○	○	136
FLOOR BOARD フロアボード	○	○	○	137
TRAY トレー	○	○	○	138
TRAY [AW061][AW071][RWL][BB SW][BBASW] トレー	○	○	○	139
TRAY [SM][AM][TPM] トレー	○	○	○	140
TRAY [SM/(BB SW,BBASW)][SM/(BB SW,BBASW)/RWL] トレー	○	○	○	141
TRAY [SM/(AW061,AW071)/RWL] トレー	○	○	○	142
FRONT GUARD BOOT [FC] フロントガードブーツ	○	○	○	143
SEAT シート	○	○	○	144
SEAT [HGL] シート	○	○	○	145
SEAT [RW] シート	○	○	○	146
SEAT [SETDX1] シート	○	○	○	147

CONTENTS 目次

a	FD30C7
b	FD30T7
c	FD30W7

CHASSIS シャーシ

SECTION 部門	a	b	c	FIG. NO.
PUMP UNIT (CLUTCH)(TOR-CON) ポンプユニット	O	O		148
PUMP UNIT (OIL CLUTCH) ポンプユニット			O	149
CONTROL VALVE [2SV] コントロールバルブ	O	O	O	150
CONTROL VALVE [3SV] コントロールバルブ	O	O	O	151
CONTROL VALVE [4SV] コントロールバルブ	O	O	O	152
CONTROL VALVE [5SV] コントロールバルブ	O	O	O	153
INLET SECTION インレットセクション	O	O	O	154
SPOOL SECTION (LIFT) スプールセクション	O	O	O	155
SPOOL SECTION (TILT) スプールセクション	O	O	O	156
SPOOL SECTION [3SV][4SV][5SV] スプールセクション	O	O	O	157
CONTROL VALVE FITTING コントロールバルブフィッティング	O	O	O	158
VALVE CONTROL [2SV] バルブコントロール	O	O	O	159
VALVE CONTROL [3SV] バルブコントロール	O	O	O	160
VALVE CONTROL [4SV] バルブコントロール	O	O	O	161
VALVE CONTROL [5SV] バルブコントロール	O	O	O	162
VALVE CONTROL KNOB バルブコントロールノブ	O	O	O	163
HYDRAULIC LINE (MAIN)(1/3)(CLUTCH)(TOR-CON) ハイドロリックライン(メイン)(1/3)	O	O		164
HYDRAULIC LINE (MAIN)(1/3)(OIL CLUTCH) ハイドロリックライン(メイン)(1/3)			O	165
HYDRAULIC LINE (MAIN)(2/3) ハイドロリックライン(メイン)(2/3)	O	O	O	166
HYDRAULIC LINE (MAIN)(2/3)[EXC][EXE][EXK][EXN][OBT] ハイドロリックライン(メイン)(2/3)	O	O		167
HYDRAULIC LINE (MAIN)(2/3)[(EXC,EXE,EXK,EXN)/PSS] ハイドロリックライン(メイン)(2/3)	O	O		168

CONTENTS 目次

a	FD30C7
b	FD30T7
c	FD30W7

CHASSIS シャーシ

SECTION 部門	a	b	c	FIG. NO.
HYDRAULIC LINE (MAIN)(3/3) ﾊｲﾄﾞﾛﾘｯｸﾗｲﾝ(ﾒｲﾝ)(3/3)	○	○	○	169
HYDRAULIC LINE (TOR-CON) ﾊｲﾄﾞﾛﾘｯｸﾗｲﾝ(ﾄﾙｺﾝ)		○		170
HYDRAULIC LINE (OIL CLUTCH) ﾊｲﾄﾞﾛﾘｯｸﾗｲﾝ(ｵｲﾙｸﾗｯﾁ)			○	171
TILT CYLINDER ﾃｨﾙﾄｼﾘﾝﾀﾞ	○	○	○	172
TILT BOOT [TLB][FC] ﾃｨﾙﾄﾌﾞｰﾂ	○	○	○	173
DECAL (1/2) ﾃﾞｶﾙ(1/2)	○	○	○	174
DECAL (2/2) ﾃﾞｶﾙ(2/2)	○	○	○	175
DECAL (2/2)[EXB] ﾃﾞｶﾙ(2/2)	○	○		176
DECAL (2/2)[EXC] ﾃﾞｶﾙ(2/2)	○	○		177
DECAL (2/2)[EXE] ﾃﾞｶﾙ(2/2)	○	○		178
DECAL (2/2)[EXK] ﾃﾞｶﾙ(2/2)	○	○		179
DECAL (2/2)[EXN] ﾃﾞｶﾙ(2/2)	○	○		180
SERVICE TOOL [TO][EX] ｻｰﾋﾞｽﾂｰﾙ	○	○	○	181
FIRE EXTINGUISHER [FE][FE M] ﾌｧｲﾔｲｸｽﾃｨﾝｸﾞｲｯｼｬ	○	○	○	182

CONTENTS 目次

MAST マスト

a	FD30C7
b	FD30T7
c	FD30W7

SECTION 部門	a	b	c	FIG. NO.
[VM39F]				
FORK [VM39F] フォーク	○	○	○	183
LIFT BRACKET [VM39F] リフトブラケット	○	○	○	184
BACKREST [VM39F] バックレスト	○	○	○	185
MAST [VM39F] マスト	○	○	○	186
TILT GAUGE [VM39F] ティルトゲージ	○	○	○	187
LIFT CYLINDER [VM39F] リフトシリンダ	○	○	○	188
MAST PIPING [VM39F] マストパイピング	○	○	○	189
[VFM39F]				
FORK [VFM39F] フォーク	○	○	○	190
LIFT BRACKET [VFM39F] リフトブラケット	○	○	○	191
BACKREST [VFM39F] バックレスト	○	○	○	192
MAST [VFM39F] マスト	○	○	○	193
TILT GAUGE [VFM39F/(TG,PPC,PR,PRC,MPC)] ティルトゲージ	○	○	○	194
LIFT CYLINDER(FRONT) [VFM39F] リフトシリンダ(フロント)	○	○	○	195
LIFT CYLINDER(REAR) [VFM39F] リフトシリンダ(リヤー)	○	○	○	196
MAST PIPING [VFM39F] マストパイピング	○	○	○	197

CONTENTS 目次

MAST マスト

a	FD30C7
b	FD30T7
c	FD30W7

SECTION 部門	a	b	c	FIG. NO.
[VFHM39F]				
FORK [VFHM39F] フォーク	○	○	○	198
LIFT BRACKET [VFHM39F] リフトブラケット	○	○	○	199
BACKREST [VFHM39F] バックレスト	○	○	○	200
MAST [VFHM39F] マスト	○	○	○	201
TILT GAUGE [VFHM39F/(TG,PPC,PR,PRC,MPC)] ティルトゲージ	○	○	○	202
LIFT CYLINDER(FRONT) [VFHM39F] リフトシリンダ(フロント)	○	○	○	203
LIFT CYLINDER (REAR) [VFHM39F] リフトシリンダ(リヤー)	○	○	○	204
MAST PIPING [VFHM39F] マストパイピング	○	○	○	205

FIG.1 ENGINE MOUNT
(F6031020) エンジンマウント

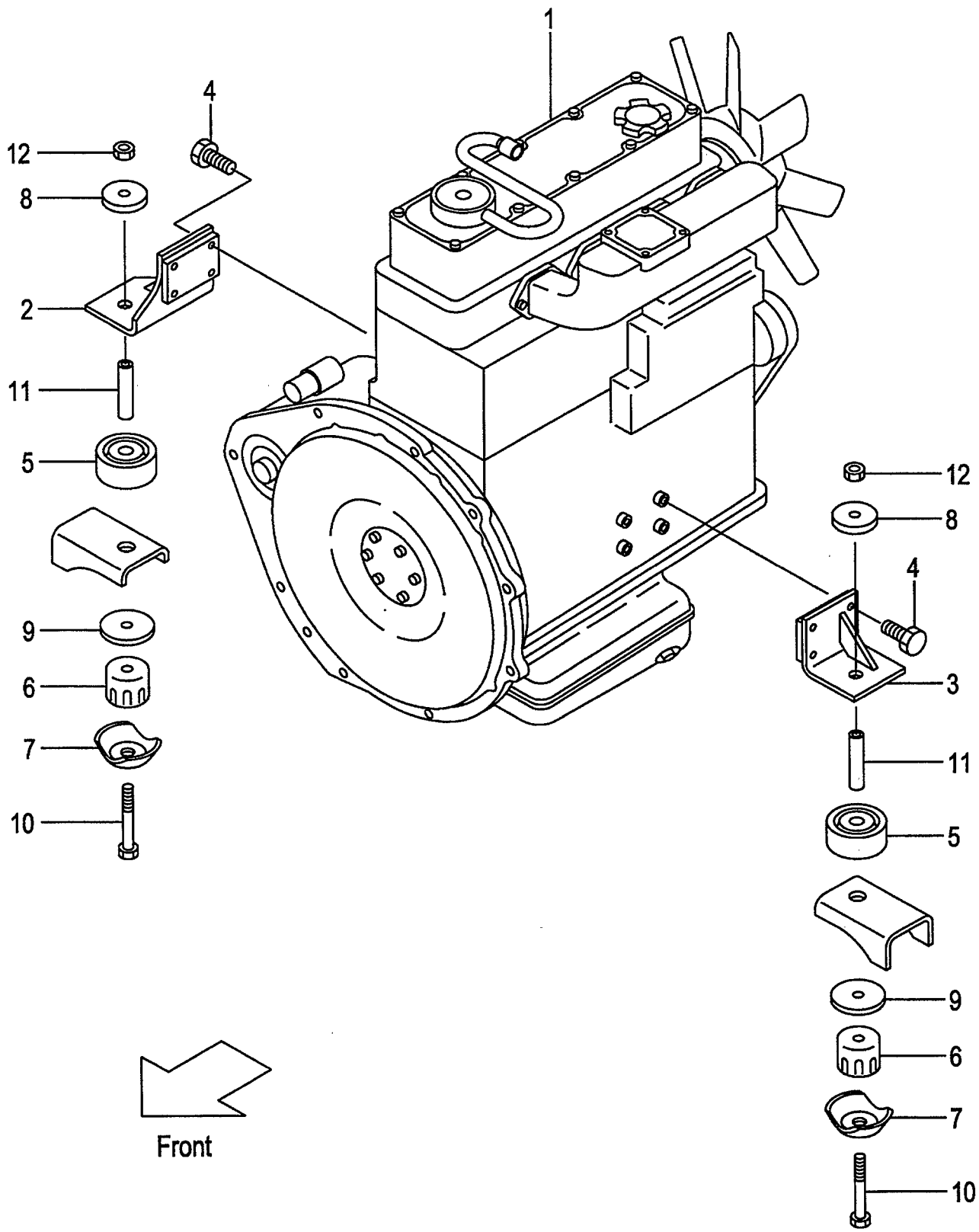

A:FD30C7
B:FD30T7
C:FD30W7

FIG.1
(F6031020)

Item No	Part No.	Mark	Description		Req'd	Remarks : Serial No.
1	242F1-00101		ENGINE,TD27	ｴﾝｼﾞﾝ	1	A
-	242G1-00101		ENGINE,TD27	ｴﾝｼﾞﾝ	1	B
-	242S1-00101		ENGINE,TD27	ｴﾝｼﾞﾝ	1	C
2	242F1-02001		BRACKET,RH	ﾌﾞﾗｹｯﾄ	1	A,B
-	242S1-02001		BRACKET,RH	ﾌﾞﾗｹｯﾄ	1	C
3	242F1-02051		BRACKET,LH	ﾌﾞﾗｹｯﾄ	1	
4	01218-10040		BOLT	ﾎﾞﾙﾄ	8	
5	216G1-02111		RUBBER,UNDER	ﾗﾊﾞｰ	2	
6	214A1-02111		RUBBER,UPPER	ﾗﾊﾞｰ	2	
7	214A1-02121		CAP	ｷｬｯﾌﾟ	2	
8	23651-02001		PLATE	ﾌﾟﾚｰﾄ	2	
9	534A5-13011		WASHER	ﾜｯｼｬ	2	
10	01103-10097		BOLT	ﾎﾞﾙﾄ	2	
11	234A1-02071		COLLAR	ｶﾗｰ	2	
12	23651-02011		NUT	ﾅｯﾄ	2	

FIG.2 AIR CLEANER
(F6031050) エアークリーナ

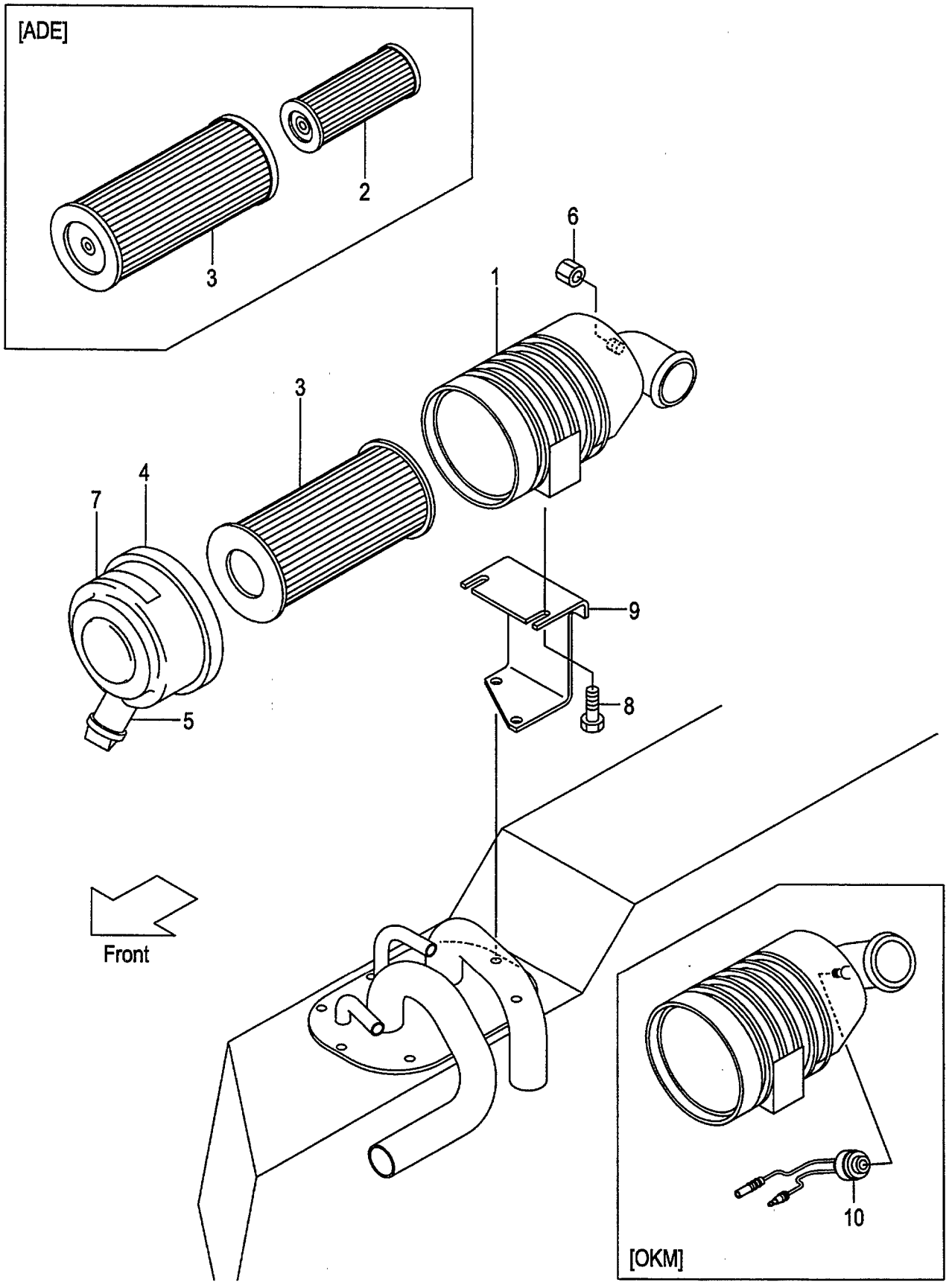

A:FD30C7
B:FD30T7
C:FD30W7

FIG.2
(F6031050)

Item No	Part No.	Mark	Description		Req'd	Remarks : Serial No.
A1	234A1-00101		CLEANER-ASSY,AIR	ｴｱｰｸﾘｰﾅｱｯｾﾝ	1	INC.1,3-7
-	534A0-60011		CLEANER-ASSY,AIR	ｴｱｰｸﾘｰﾅｱｯｾﾝ	1	[ADE] INC.1-7
1	234A1-00111		BODY	ﾎﾞﾃﾞｨ	1	
2	534A0-62011		ELEMENT,INNER	ｴﾚﾒﾝﾄ	1	[ADE]
3	256G1-08011		ELEMENT,OUTER	ｴﾚﾒﾝﾄ	1	
-	534A0-62001		ELEMENT,OUTER	ｴﾚﾒﾝﾄ	1	[ADE]
4	256G1-08021		COVER	ｶﾊﾞｰ	1	
5	256A1-08031		VALVE,VACUATOR	ﾊﾞﾙﾌﾞ	1	
6	53651-12551		CAP,NIPPLE	ｷｬｯﾌﾟ	1	
7	234A1-00121		LABEL	ﾗﾍﾞﾙ	1	
-	516G0-62001		LABEL	ﾗﾍﾞﾙ	1	[ADE]
8	01183-08016		BOLT	ﾎﾞﾙﾄ	2	
9	239A1-02511		BRACKET,AIR-CLEANER	ﾌﾞﾗｹｯﾄ	1	A,B
-	239H1-02001		BRACKET,AIR-CLEANER	ﾌﾞﾗｹｯﾄ	1	C
-	239H1-02001		BRACKET,AIR-CLEANER	ﾌﾞﾗｹｯﾄ	1	A [PC]
10	522A1-10201		SENSOR,762MM	ｾﾝｻ	1	[OKM]

FIG.3 AIR DUCT
(F6031080) エアーダクト

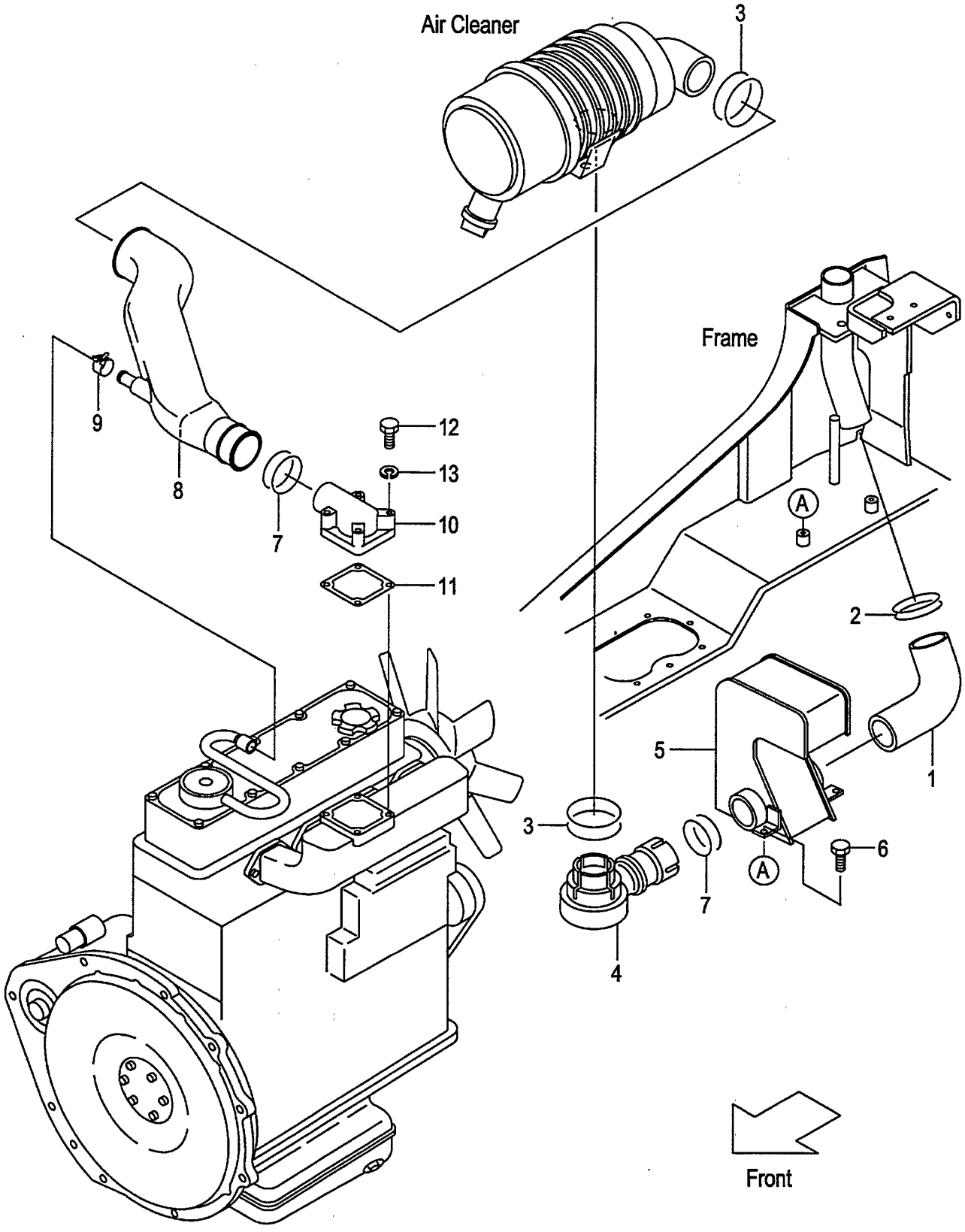

FIG.3
(F6031080)

A:FD30C7 FD30T7 FD30W7

Item No	Part No.	Mark	Description		Req'd	Remarks : Serial No.
1	217M1-02031		HOSE,AIR-DUCT	ﾎｰｽ	1	
2	04911-00060		CLIP	ｸﾘｯﾌﾟ	1	
3	04911-00070		CLIP	ｸﾘｯﾌﾟ	2	
4	234A1-02001		INTAKE,AIR	ｲﾝﾃｰｸ	1	
5	217M1-02402		RESONATOR	ﾚｿﾞﾈｰﾀ	1	
6	01185-08016		BOLT	ﾎﾞﾙﾄ	2	
7	04911-00055		CLIP	ｸﾘｯﾌﾟ	2	
8	242F1-02101		PIPE,AIR-INTAKE	ﾊﾟｲﾌﾟ	1	
9	23652-22121		CLIP	ｸﾘｯﾌﾟ	1	
10	242F1-02111		INTAKE,AIR	ｲﾝﾃｰｸ	1	
11	242F1-02121		GASKET	ｶﾞｽｹｯﾄ	1	
12	01100-08065		BOLT	ﾎﾞﾙﾄ	4	
13	02010-00008		WASHER	ﾜｯｼｬ	4	

FIG.4 PRE CLEANER [CAKB]

(F6031090) ﾌﾟﾚｸﾘｰﾅ

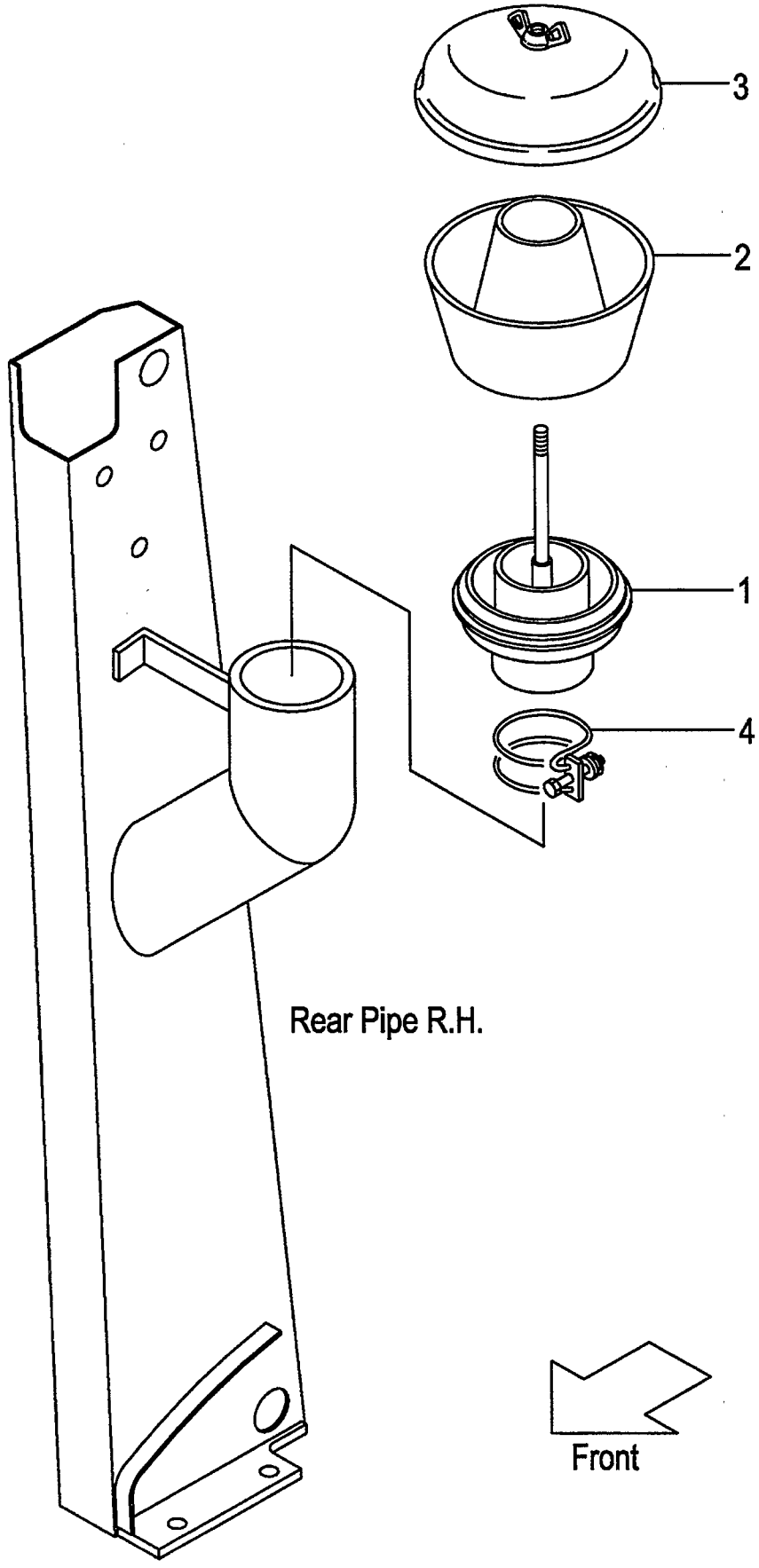

FIG.4
(F6031090)

A:FD30C7 FD30T7 FD30W7

Item No	Part No.	Mark	Description		Req'd	Remarks : Serial No.
A1	522B0-92021		CLEANER-ASSY,PRE	ﾌﾟﾚｸﾘｰﾅｱｯｾﾝ	1	[CAKB] INC.1-3
1	522B0-92031		SLEEVE	ｽﾘｰﾌﾞ	1	[CAKB]
2	522B0-92041		BODY	ﾎﾞﾃﾞｨ	1	[CAKB]
3	522B0-92051		COVER	ｶﾊﾞｰ	1	[CAKB]
4	04911-00090		CLIP	ｸﾘｯﾌﾟ	1	[CAKB]

FIG.5 COOLING UNIT (CLUTCH)

(F6032130) クーリング゛ユニット

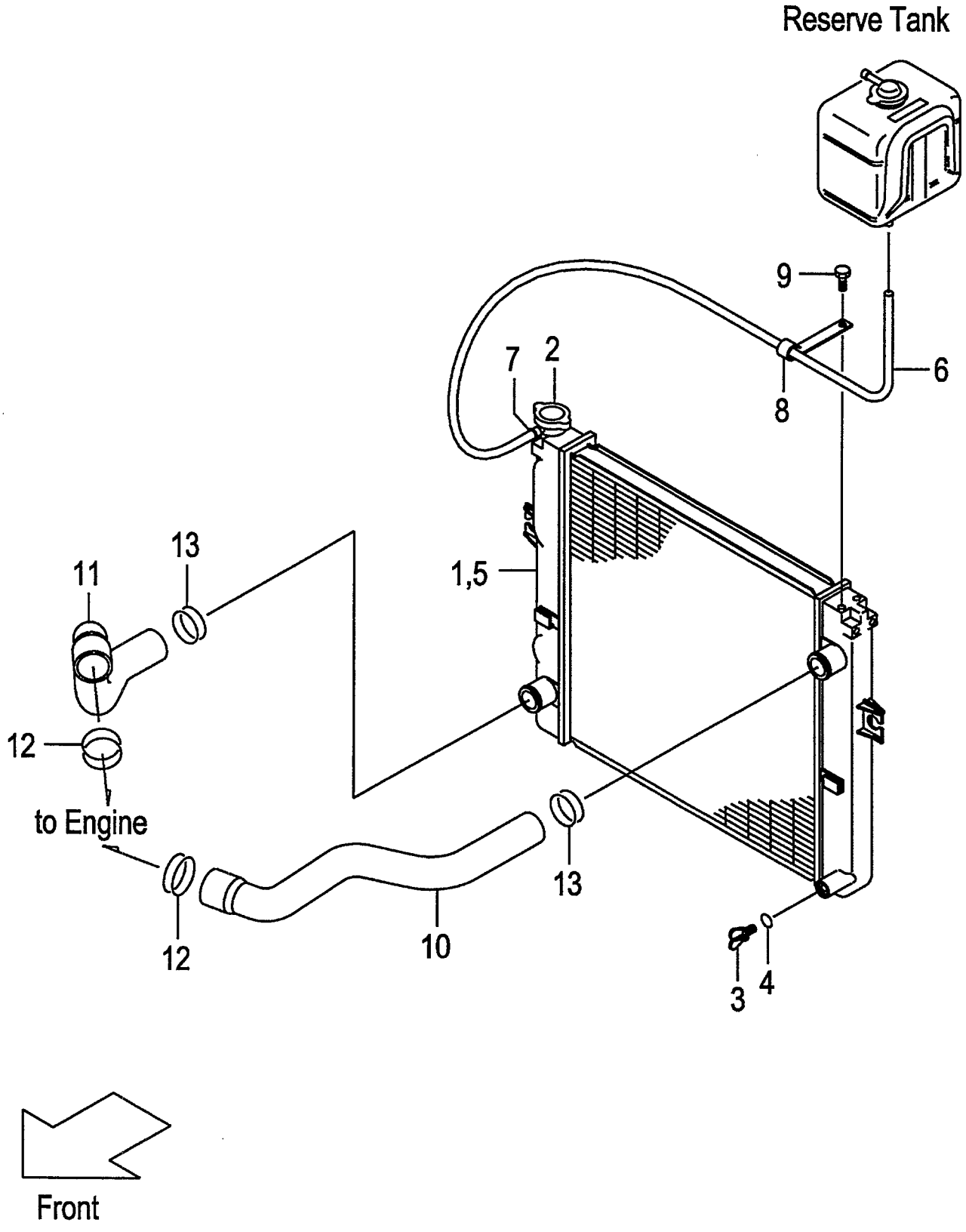

FIG.5
(F6032130)

A:FD30C7

Item No	Part No.	Mark	Description		Req'd	Remarks : Serial No.
A1	237A2-10102		RADIATOR-ASSY	ﾗｼﾞｴｰﾀｱｯｾﾝ	1	INC.1-7
-	537A6-60302		RADIATOR-ASSY	ﾗｼﾞｴｰﾀｱｯｾﾝ	1	[RADPF][HCS][EXK] INC.1-7
1	NO PART NO.	#	RADIATOR	ﾗｼﾞｴｰﾀ	1	
-	NO PART NO.	#	RADIATOR	ﾗｼﾞｴｰﾀ	1	[RADPF][HCS][EXK]
2	222A2-10211		CAP	ｷｬｯﾌﾟ	1	
3	234A2-12201		COCK	ｺｯｸ	1	
4	234A2-12211		O-RING	Oﾘﾝｸﾞ	1	
5	NO PART NO.	#	NUT	ﾅｯﾄ	3	
-	NO PART NO.	#	NUT	ﾅｯﾄ	4	[RADPF][HCS][EXK]
6	NO PART NO.		HOSE	ﾎｰｽ	1	
7	23772-12071		CLIP	ｸﾘｯﾌﾟ	1	
8	214A2-42331		CLIP	ｸﾘｯﾌﾟ	1	
9	01185-08016		BOLT	ﾎﾞﾙﾄ	1	
10	242F2-12001		HOSE,UPPER	ﾎｰｽ	1	
11	242F2-12051		HOSE,LOWER	ﾎｰｽ	1	
12	04911-00053		CLIP	ｸﾘｯﾌﾟ	2	
13	04911-00044		CLIP	ｸﾘｯﾌﾟ	2	

FIG.6 COOLING UNIT (TOR-CON)(OIL CLUTCH)

(F6032150) クーリング゛ユニット

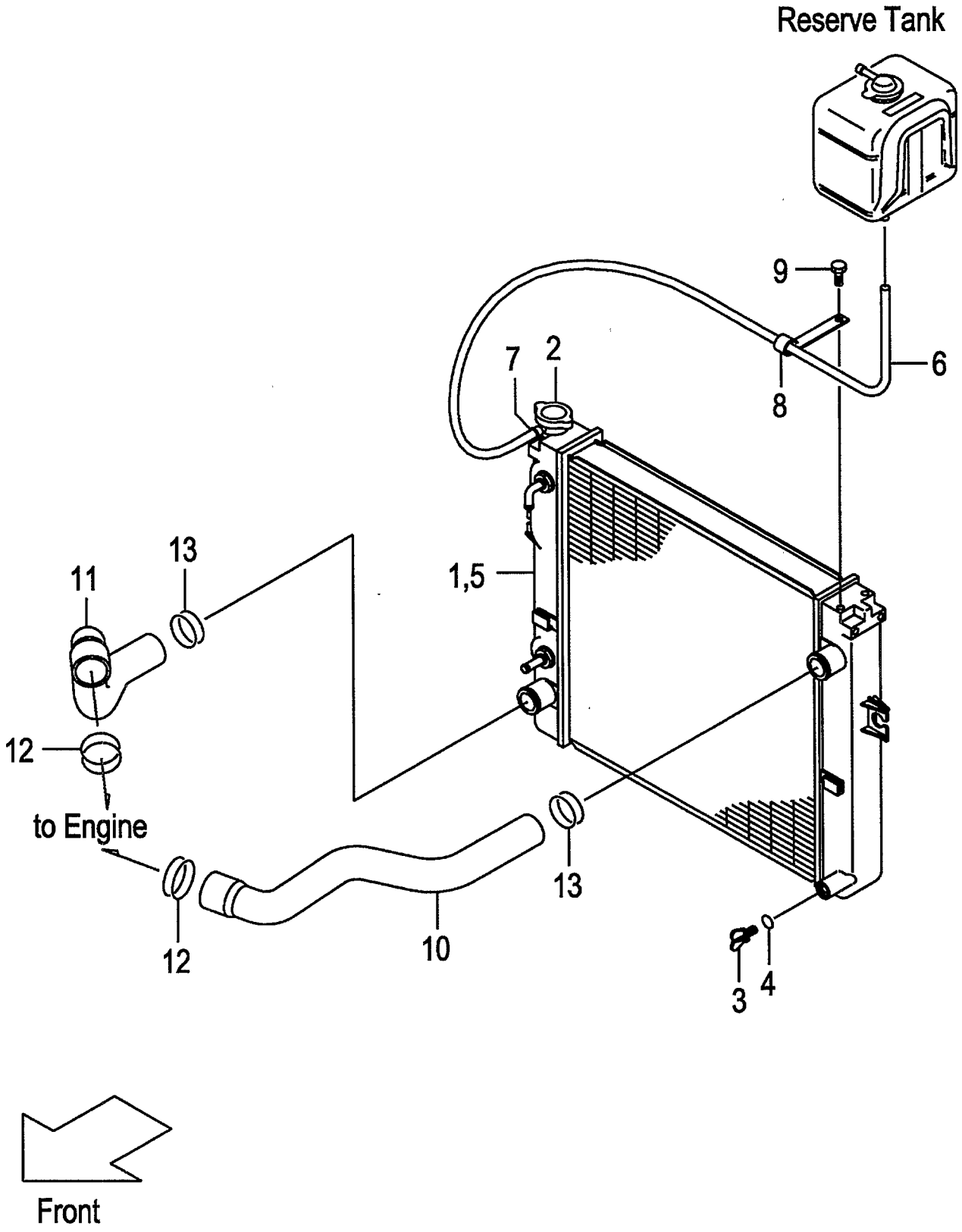

A:FD30T7
B:FD30W7

FIG.6
(F6032150)

Item No	Part No.	Mark	Description		Req'd	Remarks : Serial No.
A1	236L2-10102		RADIATOR-ASSY	ﾗｼﾞｴｰﾀｱｯｾﾝ	1	A INC.1-7
-	237H2-10102		RADIATOR-ASSY	ﾗｼﾞｴｰﾀｱｯｾﾝ	1	B INC.1-7
-	536B6-60302		RADIATOR-ASSY	ﾗｼﾞｴｰﾀｱｯｾﾝ	1	A [RADPF][HCS][EXK] INC.1-7
-	537A6-60302		RADIATOR-ASSY	ﾗｼﾞｴｰﾀｱｯｾﾝ	1	B [RADPF][HCS] INC.1-7
1	NO PART NO.	#	RADIATOR	ﾗｼﾞｴｰﾀ	1	A
-	NO PART NO.	#	RADIATOR	ﾗｼﾞｴｰﾀ	1	B
-	NO PART NO.	#	RADIATOR	ﾗｼﾞｴｰﾀ	1	A [RADPF][HCS][EXK]
-	NO PART NO.	#	RADIATOR	ﾗｼﾞｴｰﾀ	1	B [RADPF][HCS]
2	222A2-10211		CAP	ｷｬｯﾌﾟ	1	
3	234A2-12201		COCK	ｺｯｸ	1	
4	234A2-12211		O-RING	Oﾘﾝｸﾞ	1	
5	NO PART NO.	#	NUT	ﾅｯﾄ	4	
6	NO PART NO.		HOSE	ﾎｰｽ	1	
7	23772-12071		CLIP	ｸﾘｯﾌﾟ	1	
8	214A2-42331		CLIP	ｸﾘｯﾌﾟ	1	
9	01185-08016		BOLT	ﾎﾞﾙﾄ	1	
10	242F2-12001		HOSE,UPPER	ﾎｰｽ	1	
11	242F2-12051		HOSE,LOWER	ﾎｰｽ	1	
12	04911-00053		CLIP	ｸﾘｯﾌﾟ	2	
13	04911-00044		CLIP	ｸﾘｯﾌﾟ	2	

FIG.7 RADIATOR PARTS & RESERVE TANK

(F6032160) ﾗｼﾞｴｰﾀﾊﾟｰﾂ&ﾘｻﾞｰﾌﾞﾀﾝｸ

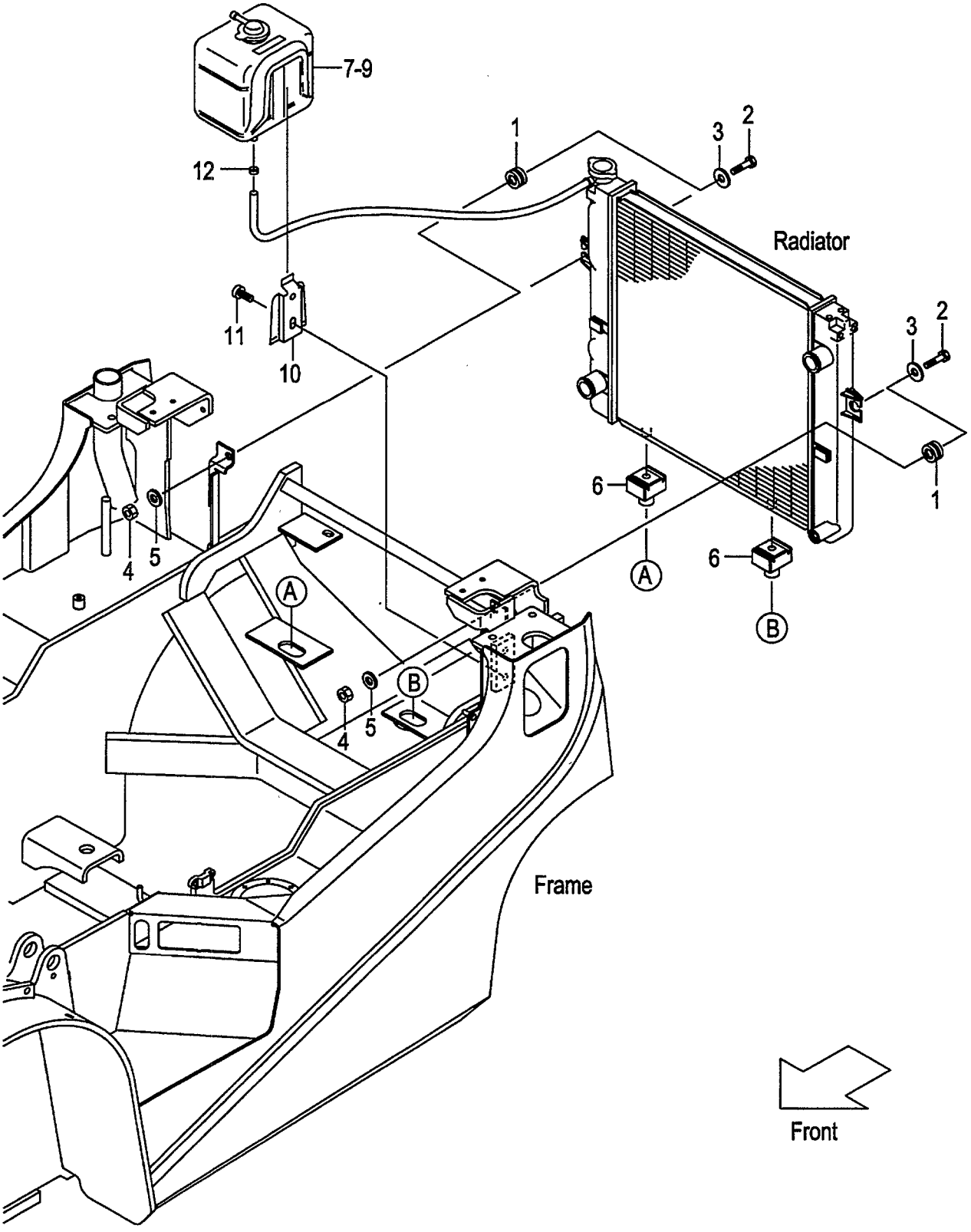

FIG.7
(F6032160)

A:FD30C7 FD30T7 FD30W7

Item No	Part No.	Mark	Description		Req'd	Remarks : Serial No.
1	214A2-12001		RUBBER	ﾗﾊﾞｰ	2	
2	214A2-12021		BOLT	ﾎﾞﾙﾄ	2	
3	22252-32251		WASHER	ﾜｯｼｬ	2	
4	23652-12051		NUT	ﾅｯﾄ	2	
5	02000-00010		WASHER	ﾜｯｼｬ	2	
6	239A2-12021		RUBBER	ﾗﾊﾞｰ	2	
7	214A2-12111		TANK,RESERVE	ﾀﾝｸ	1	INC.8,9
-	214A2-12121		TANK,RESERVE	ﾀﾝｸ	1	[OKM] INC.8,9
8	214A2-13001		CAP	ｷｬｯﾌﾟ	1	
9	214A2-13011		PACKING	ﾊﾟｯｷﾝｸﾞ	1	
10	214A2-12141		BRACKET	ﾌﾞﾗｹｯﾄ	1	
11	214A2-42611		SCREW	ｽｸﾘｭ	2	
12	214A2-12201		CLIP	ｸﾘｯﾌﾟ	1	

FIG.8 FAN SHROUD (CLUTCH)(TOR-CON)

(F60321A0) ﾌｧﾝｼｭﾗｳﾄﾞ

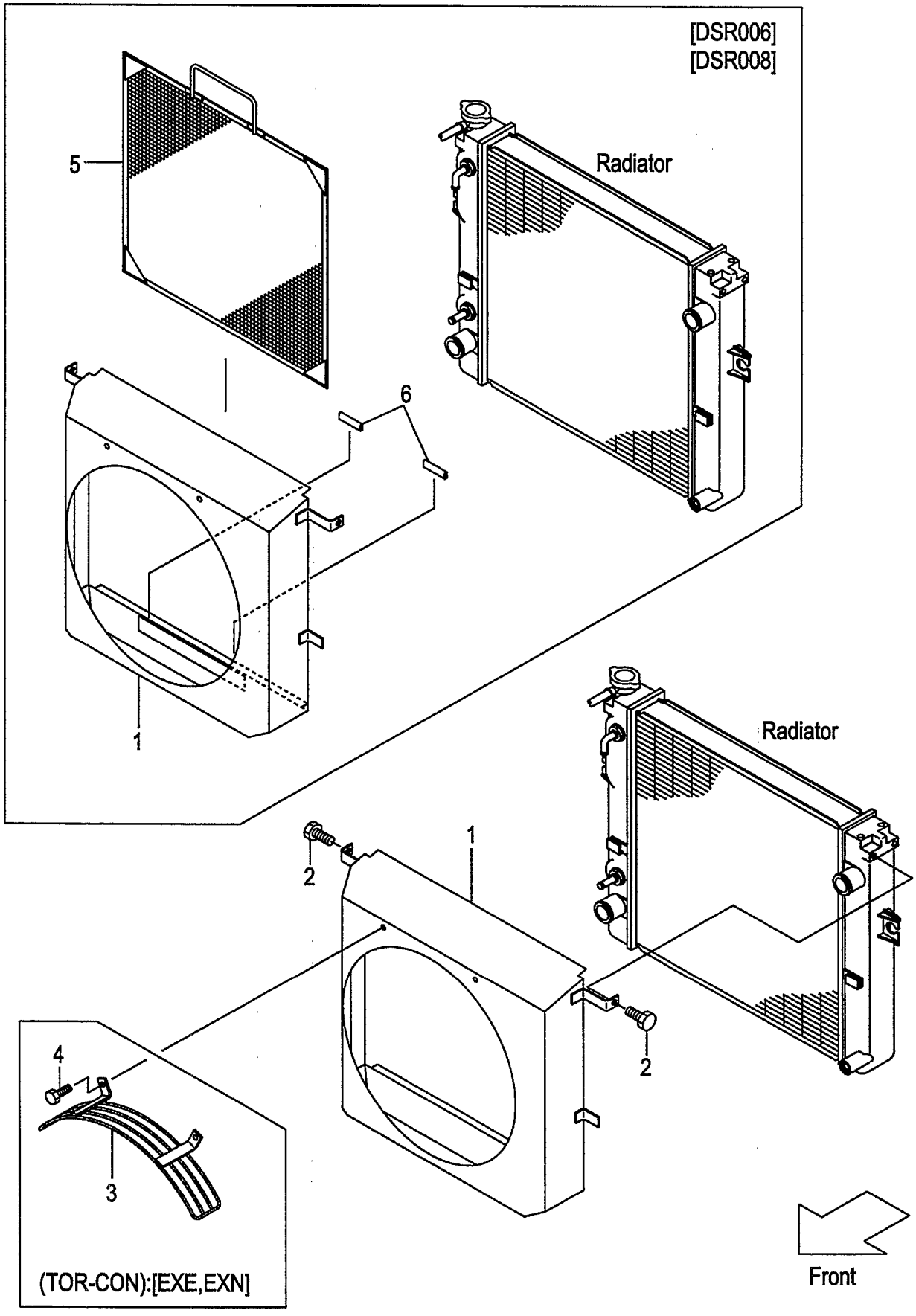

A:FD30C7
B:FD30T7

FIG.8
(F60321A0)

Item No	Part No.	Mark	Description		Req'd	Remarks : Serial No.
1	242F2-12201		SHROUD,FAN	ｼｭﾗｳﾄﾞ	1	
-	542F6-52001		SHROUD,FAN	ｼｭﾗｳﾄﾞ	1	[DSR006][DSR008]
2	01185-08016		BOLT	ﾎﾞﾙﾄ	2	
3	532B3-82201		GUARD,FAN	ｶﾞｰﾄﾞ	1	B [EXE][EXN]
4	01185-08020		BOLT	ﾎﾞﾙﾄ	2	B [EXE][EXN]
5	539A6-52051		SCREEN,DUST	ｽｸﾘｰﾝ	1	[DSR006]
-	539A6-52151		SCREEN,DUST	ｽｸﾘｰﾝ	1	[DSR008]
6	209P6-42831		EDGING	ｴｯｼﾞﾝｸﾞ	2	[DSR006][DSR008]

FIG.9 FAN SHROUD (OIL CLUTCH)

(F60321B0) ﾌｧﾝｼｭﾗｳﾄﾞ

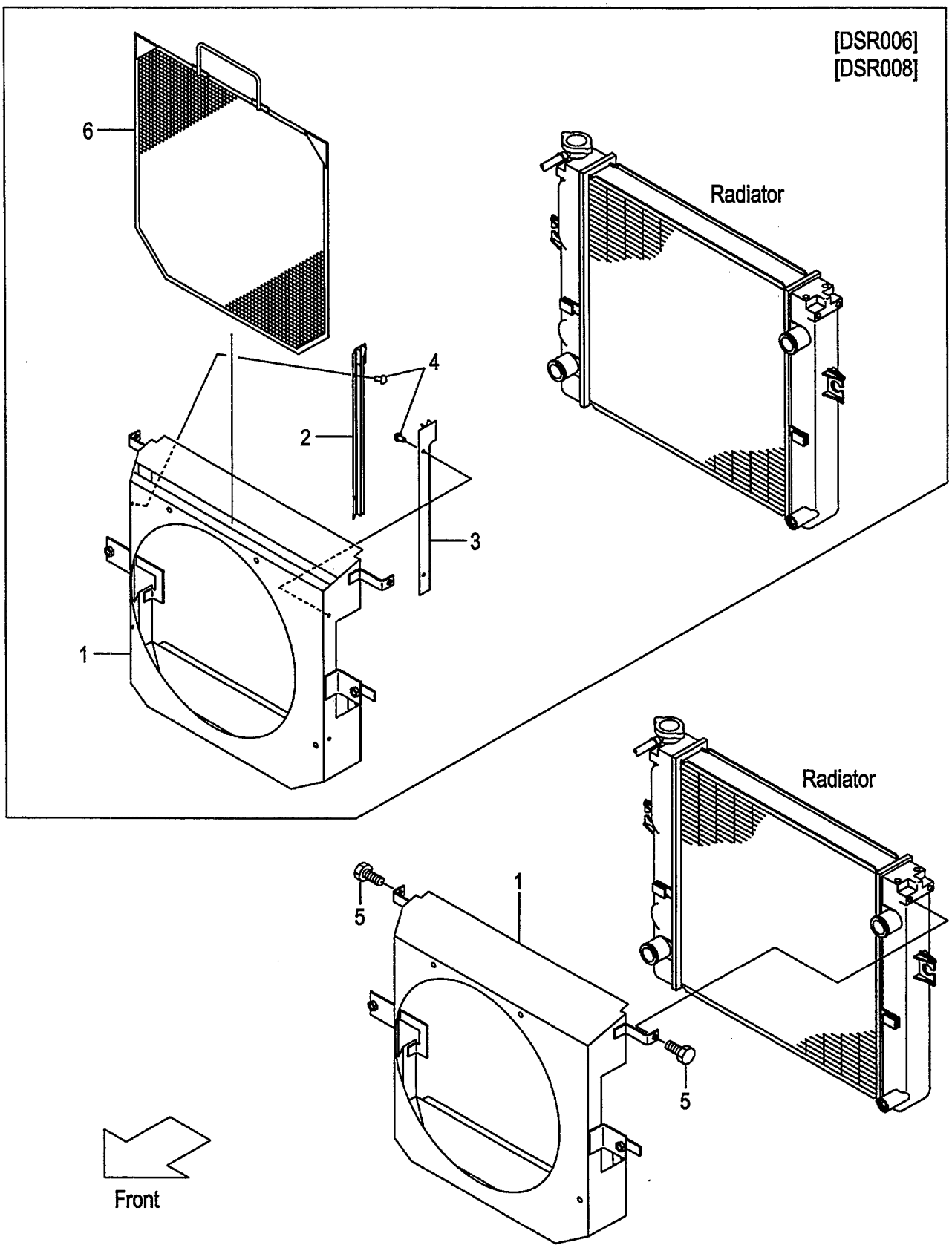

FIG.9
(F60321B0)

A:FD30W7

Item No	Part No.	Mark	Description		Req'd	Remarks : Serial No.
A1	542S6-50101		SHROUD-ASSY,FAN	ｼｭﾗｳﾄﾞｱｯｾﾝ	1	[DSR006][DSR008] INC.1-4
1	242S2-12201		SHROUD,FAN	ｼｭﾗｳﾄﾞ	1	
-	542S6-52201		SHROUD,FAN	ｼｭﾗｳﾄﾞ	1	[DSR006][DSR008]
2	542S6-52011		GUIDE,RH	ｶﾞｲﾄﾞ	1	[DSR006][DSR008]
3	539H6-52351		GUIDE,LH	ｶﾞｲﾄﾞ	1	[DSR006][DSR008]
4	22256-42001		RIVET	ﾘﾍﾞｯﾄ	4	[DSR006][DSR008]
5	01185-08016		BOLT	ﾎﾞﾙﾄ	2	
6	542S6-52051		SCREEN,DUST	ｽｸﾘｰﾝ	1	[DSR006]
-	542S6-52151		SCREEN,DUST	ｽｸﾘｰﾝ	1	[DSR008]

FIG.10 FUEL SYSTEM (SUPPLY)

(F6032210) フューエルシステム

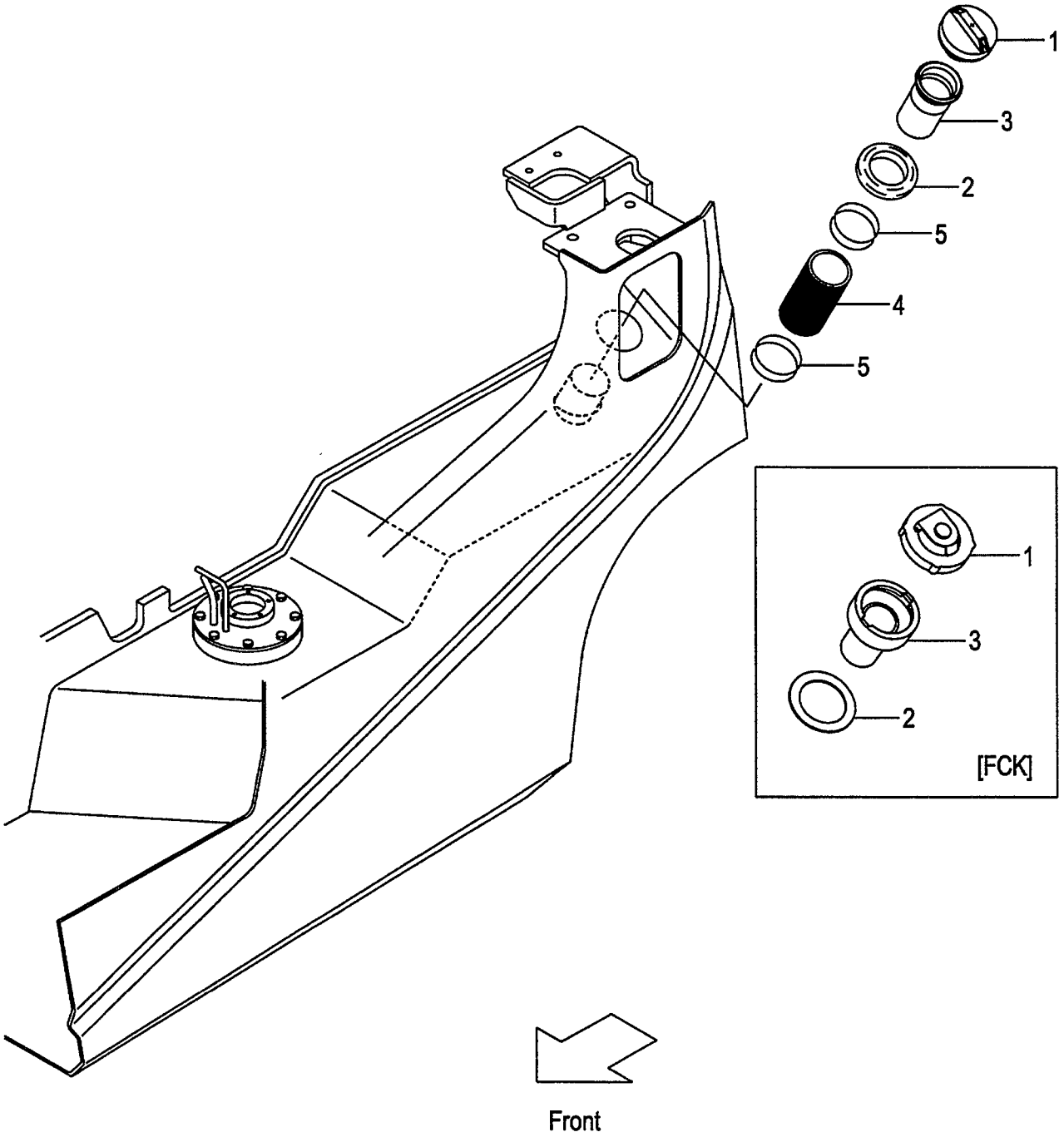

FIG.10
(F6032210)

A:FD30C7 FD30T7 FD30W7

Item No	Part No.	Mark	Description		Req'd	Remarks : Serial No.
1	216G2-22051		CAP,FUEL	ｷｬｯﾌﾟ	1	
-	518G8-12001		CAP,FUEL	ｷｬｯﾌﾟ	1	[FCK]
2	216G2-22211		GROMMET	ｸﾞﾛﾒｯﾄ	1	
-	518G8-12101		RUBBER	ﾗﾊﾞｰ	1	[FCK]
3	218G2-22001		PIPE,FUEL	ﾊﾟｲﾌﾟ	1	
-	518G8-12051		PIPE,FUEL	ﾊﾟｲﾌﾟ	1	[FCK]
4	218G2-22051		HOSE,FUEL	ﾎｰｽ	1	
5	04911-00060		CLIP	ｸﾘｯﾌﾟ	2	

FIG.11 FUEL SYSTEM (SUCTION)

(F6032220) フューエルシステム

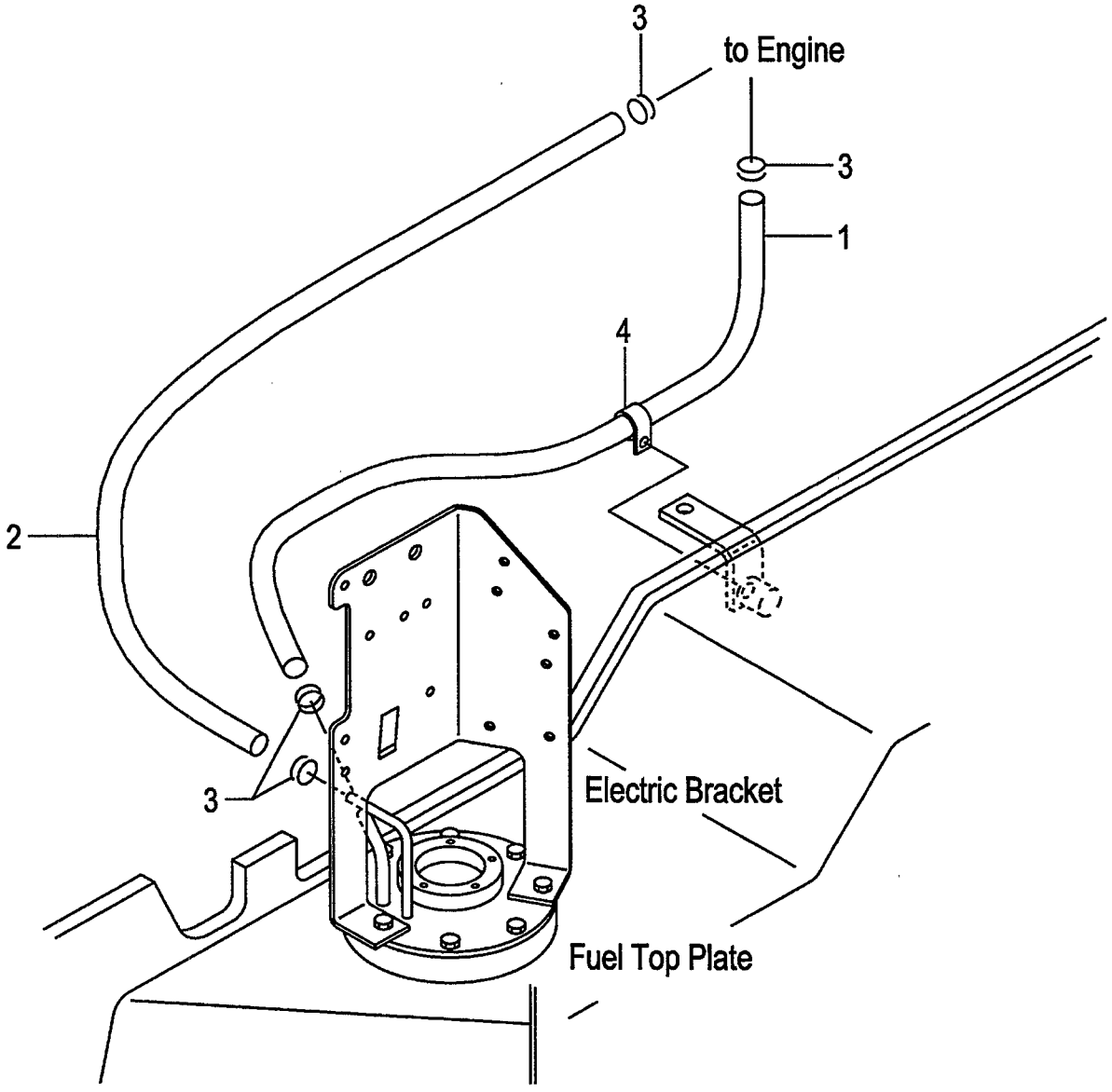

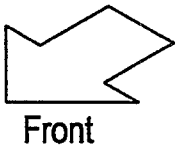

FIG.11
(F6032220)

A:FD30C7 FD30T7 FD30W7

Item No	Part No.	Mark	Description	Req'd	Remarks : Serial No.
1	242F2-22001		HOSE,FUEL,7.5X700 ホース	1	
2	23322-22011		HOSE,FUEL,6.5X330 ホース	1	
3	22192-22091		CLIP クリップ	4	
4	26602-42081		CLIP クリップ	1	

FIG.12 EXHAUST SYSTEM

(F6032330) エキゾーストシステム

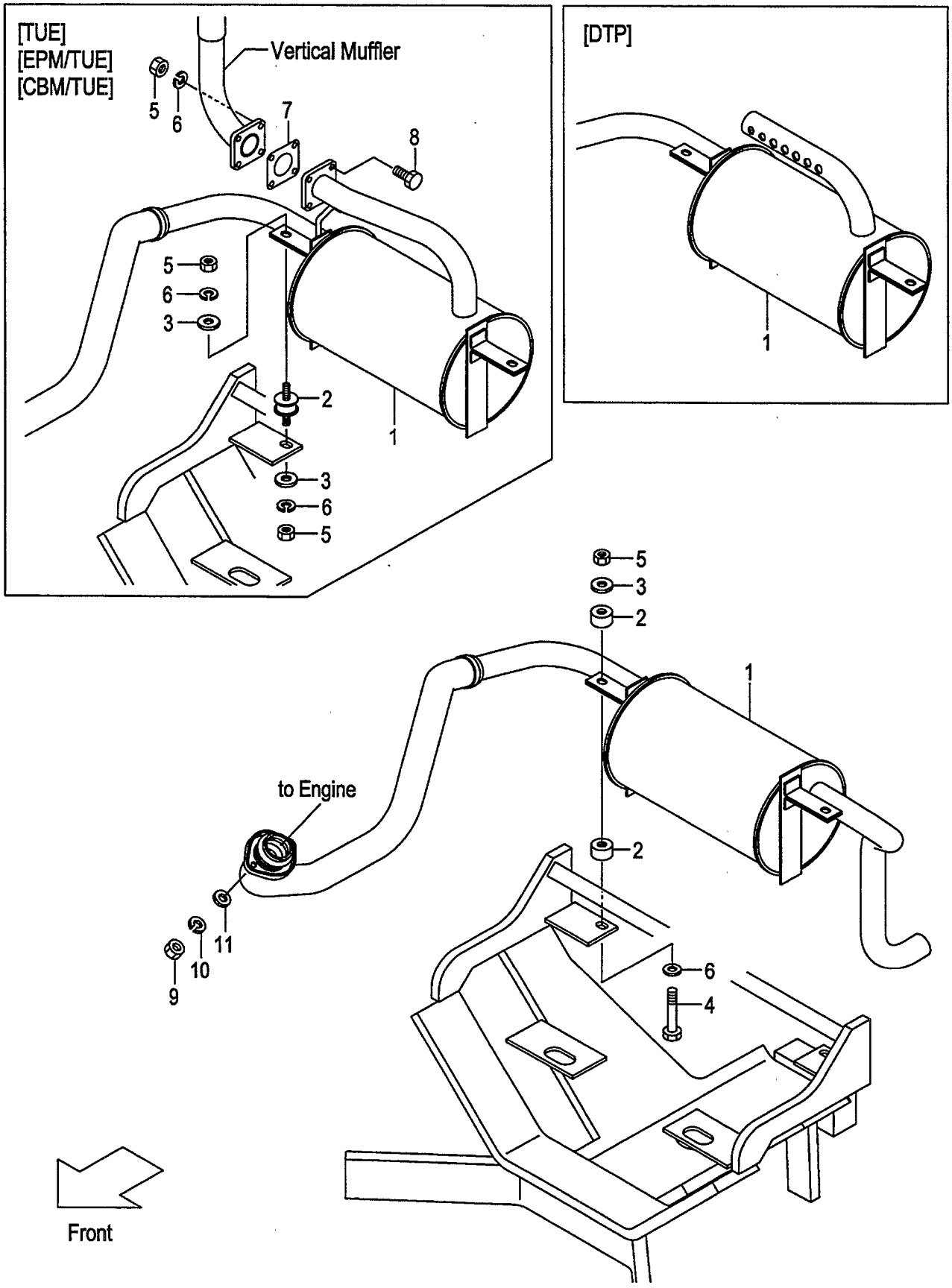

FIG.12
(F6032330)

A:FD30C7 FD30T7 FD30W7

Item No	Part No.	Mark	Description		Req'd	Remarks : Serial No.
1	242P2-30101		MUFFLER	ﾏﾌﾗ	1	
-	542F0-80101		MUFFLER	ﾏﾌﾗ	1	[TUE]
-	542P1-70101		MUFFLER	ﾏﾌﾗ	1	[EPM]
-	542F0-80201		MUFFLER	ﾏﾌﾗ	1	[EPM/TUE]
-	542P1-70201		MUFFLER	ﾏﾌﾗ	1	[CBM]
-	542F0-80301		MUFFLER	ﾏﾌﾗ	1	[CBM/TUE]
-	542F1-70301		MUFFLER	ﾏﾌﾗ	1	[DTP]
2	22252-32241		RUBBER	ﾗﾊﾞｰ	4	
-	539A0-82201		RUBBER	ﾗﾊﾞｰ	2	[TUE][EPM/TUE][CBM/TUE]
3	22252-32251		WASHER	ﾜｯｼｬ	2	
-	124T3-43041		PLATE	ﾌﾟﾚｰﾄ	4	[TUE][EPM/TUE][CBM/TUE]
4	21232-32551		BOLT	ﾎﾞﾙﾄ	2	(WITHOUT TUE,EPM/TUE,CBM/TUE)
5	23652-12051		NUT	ﾅｯﾄ	2	
-	01400-00008		NUT	ﾅｯﾄ	8	[TUE][EPM/TUE][CBM/TUE]
6	02000-00010		WASHER	ﾜｯｼｬ	2	
-	02010-00008		WASHER	ﾜｯｼｬ	8	[TUE][EPM/TUE][CBM/TUE]
7	217G2-32001		GASKET	ｶﾞｽｹｯﾄ	1	[TUE][EPM/TUE][CBM/TUE]
8	01182-08025		BOLT	ﾎﾞﾙﾄ	4	[TUE][EPM/TUE][CBM/TUE]
9	01400-20008		NUT	ﾅｯﾄ	2	
10	02010-00008		WASHER	ﾜｯｼｬ	2	
11	02000-00008		WASHER	ﾜｯｼｬ	2	

FIG.13 EXHAUST SYSTEM [DPF]

(F6032340) エキゾーストシステム

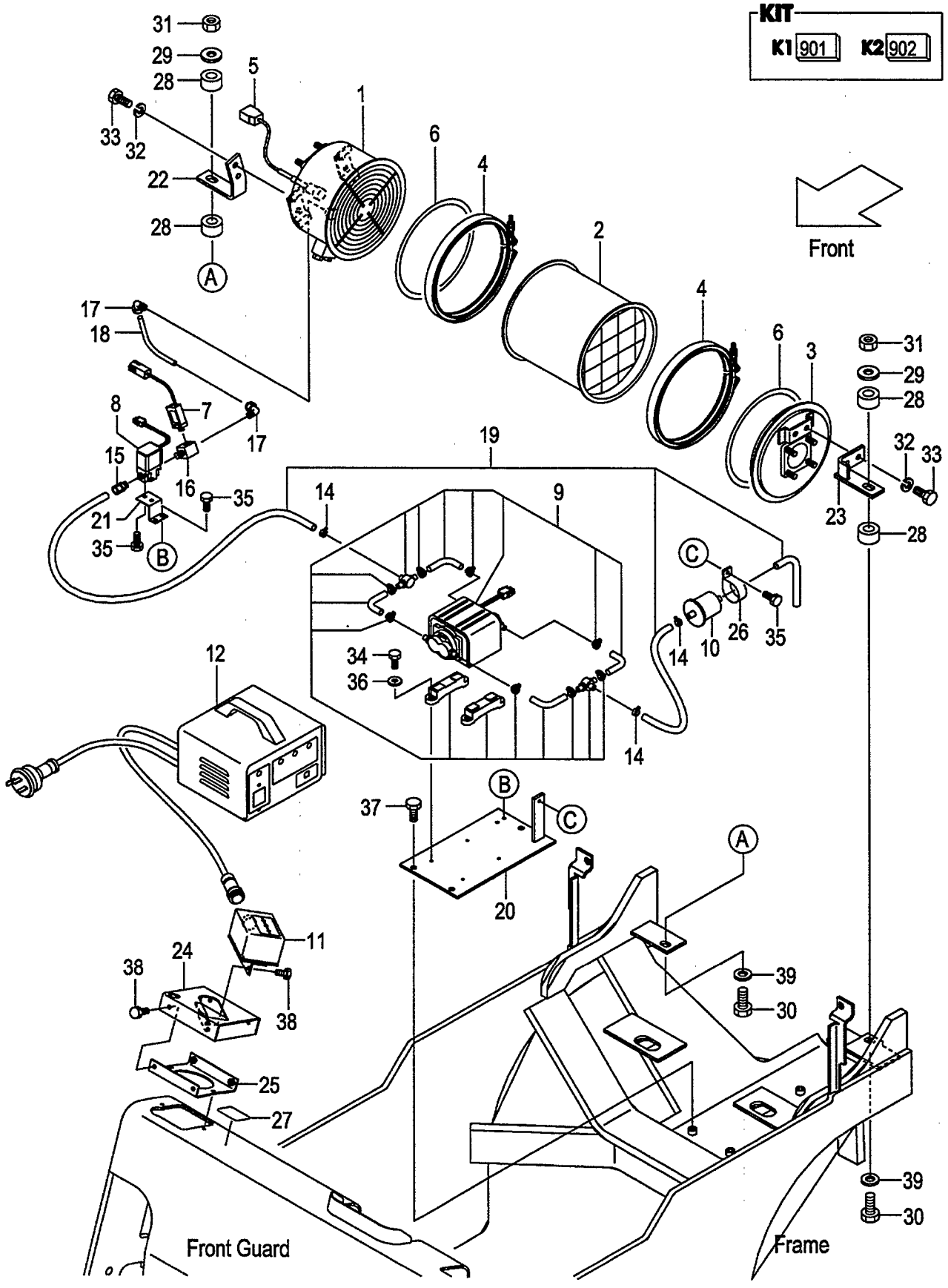

FIG.13
(F6032340)

A:FD30C7 FD30T7 FD30W7

Item No	Part No.	Mark	Description		Req'd	Remarks : Serial No.
901	509P5-90101	K1	KIT,DPF-MUFFLER	ﾏﾌﾗｷｯﾄ	1	[DPF] INC.1-15
902	509P5-92511	K2	KIT,PIPING	ﾊﾟｲﾋﾟﾝｸﾞｷｯﾄ	1	[DPF] INC.14,15
A1	509P5-92001	*	MUFFLER-ASSY,DPF	ﾏﾌﾗｱｯｾﾝ	1	[DPF] INC.1-6
1	509P5-92011	*	UNIT,INLET	ﾕﾆｯﾄ	1	[DPF]
2	509P5-92021	*	UNIT,FILTER	ﾕﾆｯﾄ	1	[DPF]
3	509P5-92031	*	UNIT,OUTLET	ﾕﾆｯﾄ	1	[DPF]
4	509P5-92041	*	V-BAND	Vﾊﾞﾝﾄﾞ	2	[DPF]
5	509P5-92051	*	SENSOR,TEMP	ｾﾝｻ	1	[DPF]
6	509P5-92061	*	GASKET	ｶﾞｽｹｯﾄ	2	[DPF]
7	509P5-92071	*	SENSOR,PRESS	ｾﾝｻ	1	[DPF]
8	509P5-92081	*	VALVE,SOLENOIDE	ﾊﾞﾙﾌﾞ	1	[DPF]
9	509P5-92091	*	PUMP,AIR	ﾎﾟﾝﾌﾟ	1	[DPF]
10	509P5-92101	*	FILTER,AIR	ﾌｨﾙﾀ	1	[DPF]
11	509P5-92111	*	UNIT,MONITOR	ﾕﾆｯﾄ	1	[DPF]
12	509P5-92121	*	UNIT,CONTROLLER	ﾕﾆｯﾄ	1	[DPF]
13	509P5-92241	*+	KIT,CONNECTOR	ｺﾈｸﾀｷｯﾄ	1	[DPF]
14	NO PART NO.	*#	CLIP	ｸﾘｯﾌﾟ	3	[DPF]
15	NO PART NO.	*#	NIPPLE	ﾆｯﾌﾟﾙ	1	[DPF]
16	509P5-92181		THREE-WAY	ｽﾘｰｳｴｲ	1	[DPF]
17	509P5-92201		ELBOW	ｴﾙﾎﾞ	2	[DPF]
18	509P5-92211		PIPE,COPPER	ﾊﾟｲﾌﾟ	1	[DPF]
19	509P5-92231		HOSE	ﾎｰｽ	1	[DPF]
20	539A5-92261		BRACKET,PUMP	ﾌﾞﾗｹｯﾄ	1	[DPF]
21	539A5-92251		BRACKET,VALVE	ﾌﾞﾗｹｯﾄ	1	[DPF]
22	539A5-92131		BRACKET,MUFFLER,RH	ﾌﾞﾗｹｯﾄ	1	[DPF]
23	539A5-92141		BRACKET,MUFFLER,LH	ﾌﾞﾗｹｯﾄ	1	[DPF]
24	539A5-92371		BRACKET,MONITOR	ﾌﾞﾗｹｯﾄ	1	[DPF]
25	516G1-42021		BRACKET	ﾌﾞﾗｹｯﾄ	1	[DPF]
26	509P5-92491		BAND	ﾊﾞﾝﾄﾞ	1	[DPF]
27	509P5-92521		DECAL,DPF-CAUTION	ﾃﾞｶﾙ	1	[DPF]
28	22252-32241		RUBBER	ﾗﾊﾞｰ	4	[DPF]
29	22252-32251		WASHER	ﾜｯｼｬ	2	[DPF]
30	21232-32551		BOLT	ﾎﾞﾙﾄ	2	[DPF]
31	23652-12051		NUT	ﾅｯﾄ	2	[DPF]
32	02013-00008		WASHER	ﾜｯｼｬ	4	[DPF]
33	01109-08020		BOLT	ﾎﾞﾙﾄ	4	[DPF]
34	01170-04012		BOLT	ﾎﾞﾙﾄ	4	[DPF]
35	01183-05010		BOLT	ﾎﾞﾙﾄ	5	[DPF]
36	02000-00004		WASHER	ﾜｯｼｬ	4	[DPF]
37	01185-08016		BOLT	ﾎﾞﾙﾄ	3	[DPF]
38	01185-06012		BOLT	ﾎﾞﾙﾄ	6	[DPF]
39	02000-00010		WASHER	ﾜｯｼｬ	2	[DPF]

FIG.14 POST & TAIL [TUE]

(F6032360) ﾎﾟｽﾄ&ﾃｲﾙ

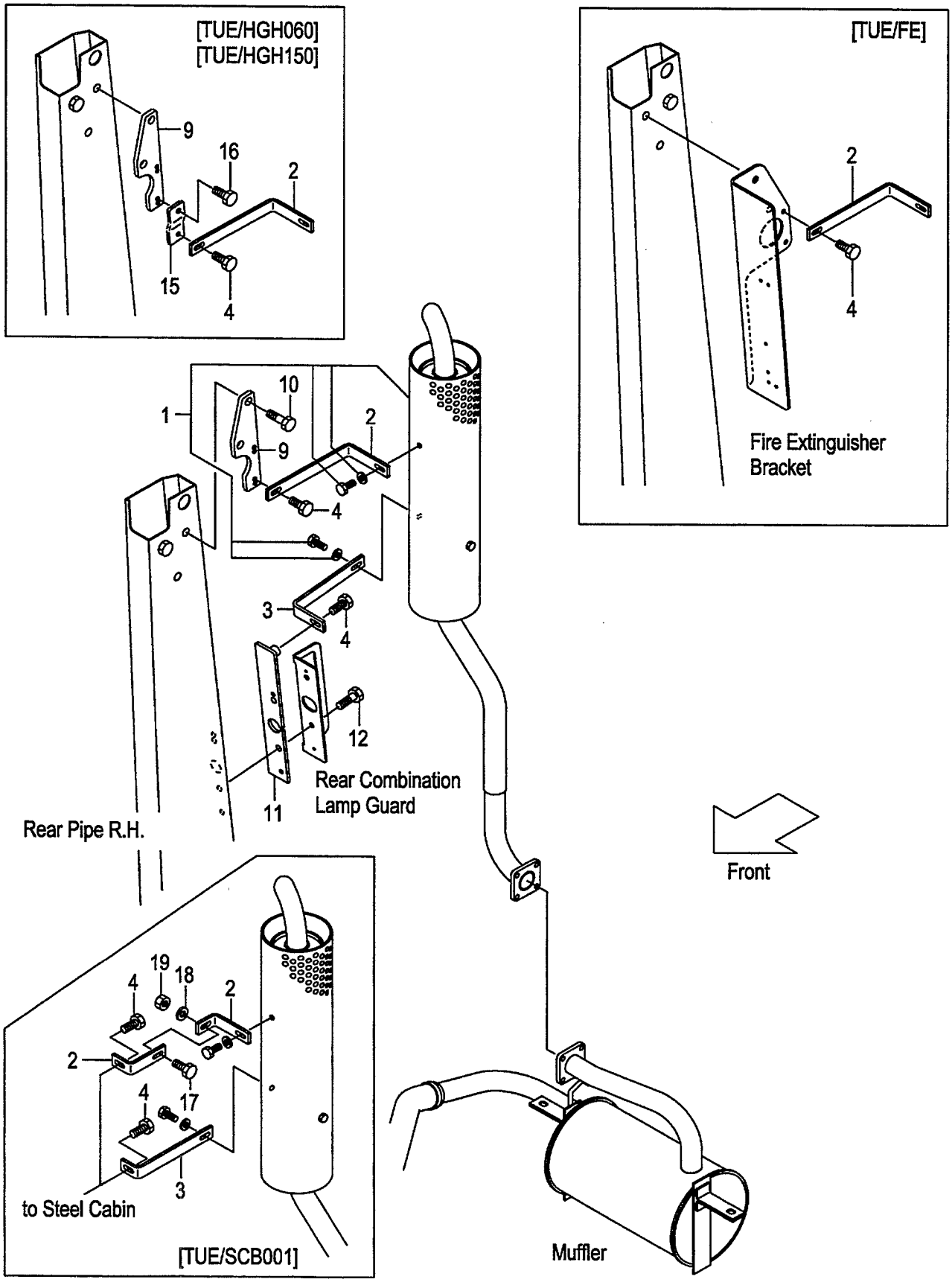

A:FD30C7 FD30T7
B:FD30W7

FIG.14
(F6032360)

Item No	Part No.	Mark	Description		Req'd	Remarks : Serial No.
1	537A0-80302		MUFFLER,VERTICAL	ﾏﾌﾗ	1	[TUE]
-	539C1-90502		MUFFLER,VERTICAL	ﾏﾌﾗ	1	[TUE/RW]
2	537A0-82001		STAY	ｽﾃｰ	1	[TUE]
-	524W3-92211		STAY	ｽﾃｰ	2	[TUE/SCB001]
-	539C1-90521		STAY	ｽﾃｰ	1	[TUE/RW]
3	537A0-82011		STAY	ｽﾃｰ	1	[TUE]
-	514A0-82022		STAY	ｽﾃｰ	1	[TUE/SCB001]
-	514A0-82081		STAY	ｽﾃｰ	1	[TUE/RW]
4	01185-08016		BOLT	ﾎﾞﾙﾄ	2	[TUE]
-	01185-08016		BOLT	ﾎﾞﾙﾄ	1	[TUE/RW]
5	01100-08045		BOLT	ﾎﾞﾙﾄ	1	[TUE/RW]
6	02000-00008		WASHER	ﾜｯｼｬ	1	[TUE/RW]
7	02010-00008		WASHER	ﾜｯｼｬ	1	[TUE/RW]
8	516G2-72071		SPACER	ｽﾍﾟｰｻ	1	[TUE/RW]
9	510F0-82032		BRACKET,STAY	ﾌﾞﾗｹｯﾄ	1	[TUE](WITHOUT TUE/FE)
10	01186-12045		BOLT	ﾎﾞﾙﾄ	2	[TUE](WITHOUT TUE/FE)
11	534A0-82101		BRACKET,STAY	ﾌﾞﾗｹｯﾄ	1	[TUE]
-	539C1-92501		GUARD	ｶﾞｰﾄﾞ	1	[TUE/RW]
12	01183-08022		BOLT	ﾎﾞﾙﾄ	2	[TUE]
-	01100-12045		BOLT	ﾎﾞﾙﾄ	4	[TUE/RW]
13	02000-00012		WASHER	ﾜｯｼｬ	4	[TUE/RW]
14	02010-00012		WASHER	ﾜｯｼｬ	4	[TUE/RW]
15	514A0-82251		BRACKET,STAY	ﾌﾞﾗｹｯﾄ	1	[TUE/HGH060]
-	529F0-82101		BRACKET,STAY	ﾌﾞﾗｹｯﾄ	1	[TUE/HGH150]
16	01183-08016		BOLT	ﾎﾞﾙﾄ	1	[TUE/HGH060][TUE/HGH150]
17	01185-08030		BOLT	ﾎﾞﾙﾄ	1	[TUE/SCB001]
18	02000-00008		WASHER	ﾜｯｼｬ	1	[TUE/SCB001]
19	01400-00008		NUT	ﾅｯﾄ	1	[TUE/SCB001]

FIG.15 POST & TAIL [TUE/(EXB,EXC,EXE,EXK,EXN)]

(F6032370) ﾎﾟｽﾄ&ﾃｲﾙ

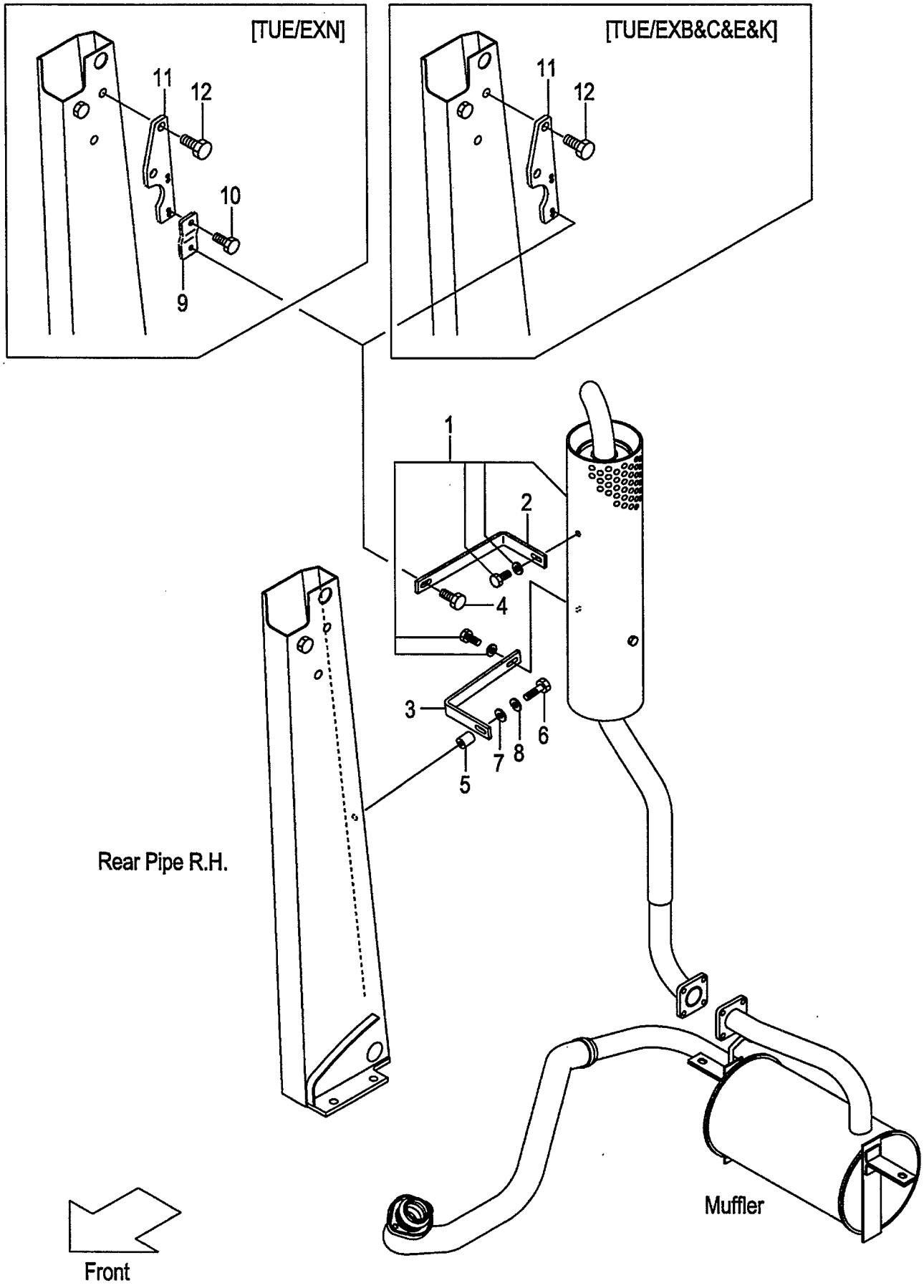

FIG.15
(F6032370)

A:FD30C7 FD30T7

Item No	Part No.	Mark	Description		Req'd	Remarks : Serial No.
1	537A0-80302		MUFFLER,VERTICAL	ﾏﾌﾗ	1	[TUE/EXB&C&E&K&N]
2	537A0-82001		STAY	ｽﾃｰ	1	[TUE/EXB&C&E&K&N]
3	537A0-82011		STAY	ｽﾃｰ	1	[TUE/EXB&C&E&K&N]
4	01185-08016		BOLT	ﾎﾞﾙﾄ	1	[TUE/EXB&C&E&K&N]
5	516G2-72071		SPACER	ｽﾍﾟｰｻ	1	[TUE/EXB&C&E&K&N]
6	01100-08045		BOLT	ﾎﾞﾙﾄ	1	[TUE/EXB&C&E&K&N]
7	02000-00008		WASHER	ﾜｯｼｬ	1	[TUE/EXB&C&E&K&N]
8	02010-00008		WASHER	ﾜｯｼｬ	1	[TUE/EXB&C&E&K&N]
9	514A0-82251		BRACKET,STAY	ﾌﾞﾗｹｯﾄ	1	[TUE/EXN]
10	01183-08016		BOLT	ﾎﾞﾙﾄ	1	[TUE/EXN]
11	510F0-82032		BRACKET,STAY	ﾌﾞﾗｹｯﾄ	1	[TUE/EXB&C&E&K&N]
12	01186-12045		BOLT	ﾎﾞﾙﾄ	2	[TUE/EXB&C&E&K&N]

FIG.16 WIRE HARNESS [DPF]

(F6032380) ワイヤハーネス

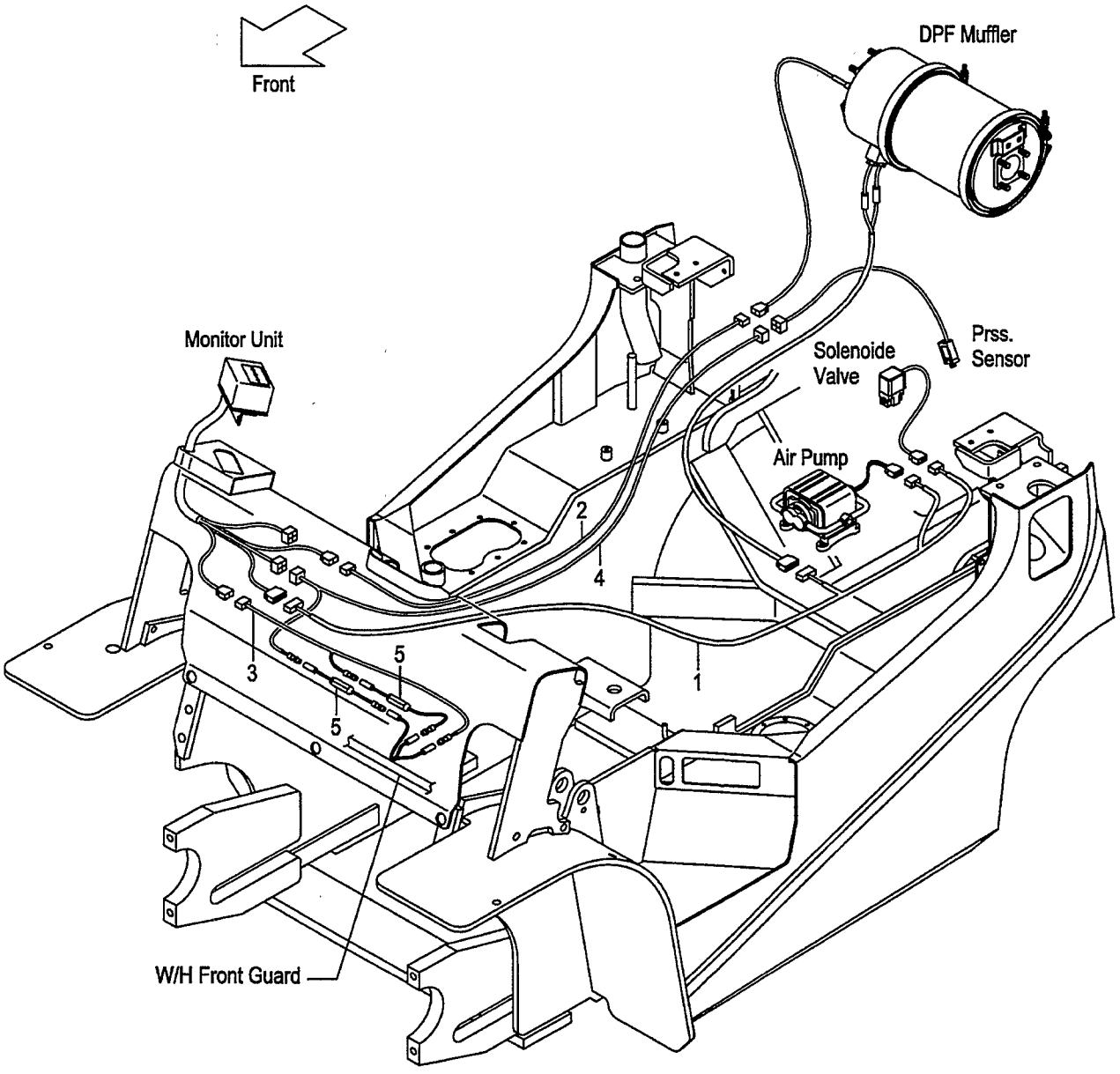

FIG.16
(F6032380)

A:FD30C7 FD30T7 FD30W7

Item No	Part No.	Mark	Description	Req'd	Remarks : Serial No.
1	539A5-92441		WIRE-HARNESS ﾜｲﾔﾊｰﾈｽ	1	[DPF] (MONITOR-HEATER&PUMP&VALVE)
2	509P5-92451		WIRE-HARNESS ﾜｲﾔﾊｰﾈｽ	1	[DPF](MONITOR-TEMP SENSOR)
3	509M5-92381		WIRE-HARNESS ﾜｲﾔﾊｰﾈｽ	1	[DPF](MONITOR-OPT TERMINAL)
4	509P5-92471		WIRE-HARNESS ﾜｲﾔﾊｰﾈｽ	1	[DPF] (MONITOR-PRESSURE SENSOR)
5	509P5-92481		WIRE-HARNESS ﾜｲﾔﾊｰﾈｽ	2	[DPF](FUSE BOX)

FIG.17 FRONT TUBE & JOINT [DPF]

(F6032390) フロントチューブ&ジョイント

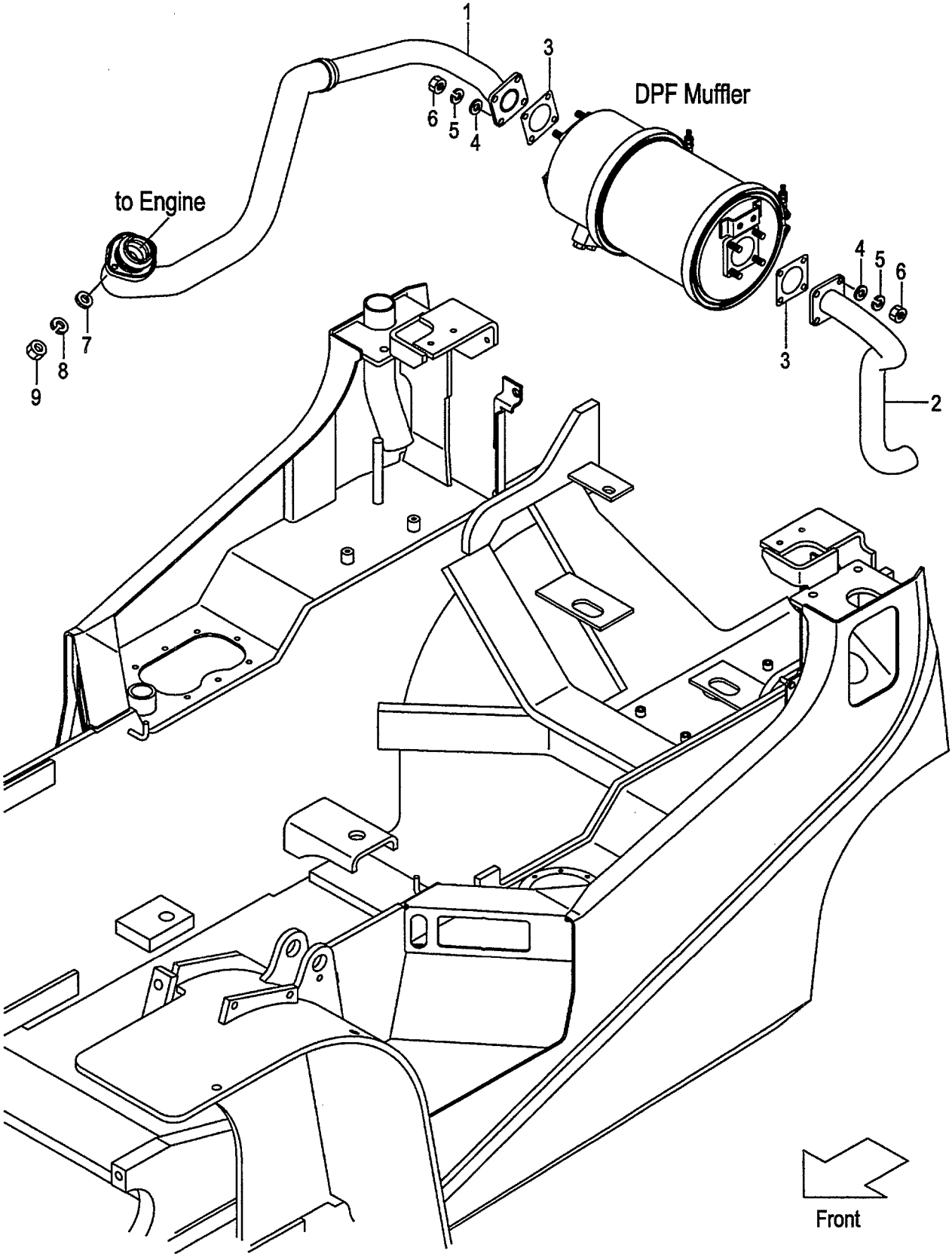

FIG.17
(F6032390)

A:FD30C7 FD30T7 FD30W7

Item No	Part No.	Mark	Description		Req'd	Remarks : Serial No.
1	542F5-92001		TUBE,FRONT	ﾁｭｰﾌﾞ	1	[DPF]
2	539F5-92341		TUBE,TAIL	ﾁｭｰﾌﾞ	1	[DPF]
3	509P5-92351		GASKET	ｶﾞｽｹｯﾄ	2	[DPF]
4	02001-00008		WASHER	ﾜｯｼｬ	8	[DPF]
5	02013-00008		WASHER	ﾜｯｼｬ	8	[DPF]
6	01400-30008		NUT	ﾅｯﾄ	8	[DPF]
7	02000-00008		WASHER	ﾜｯｼｬ	4	[DPF]
8	02010-00008		WASHER	ﾜｯｼｬ	4	[DPF]
9	01400-20008		NUT	ﾅｯﾄ	4	[DPF]

FIG.18 COMBINATION METER
(F6032420) コンビネーションメータ

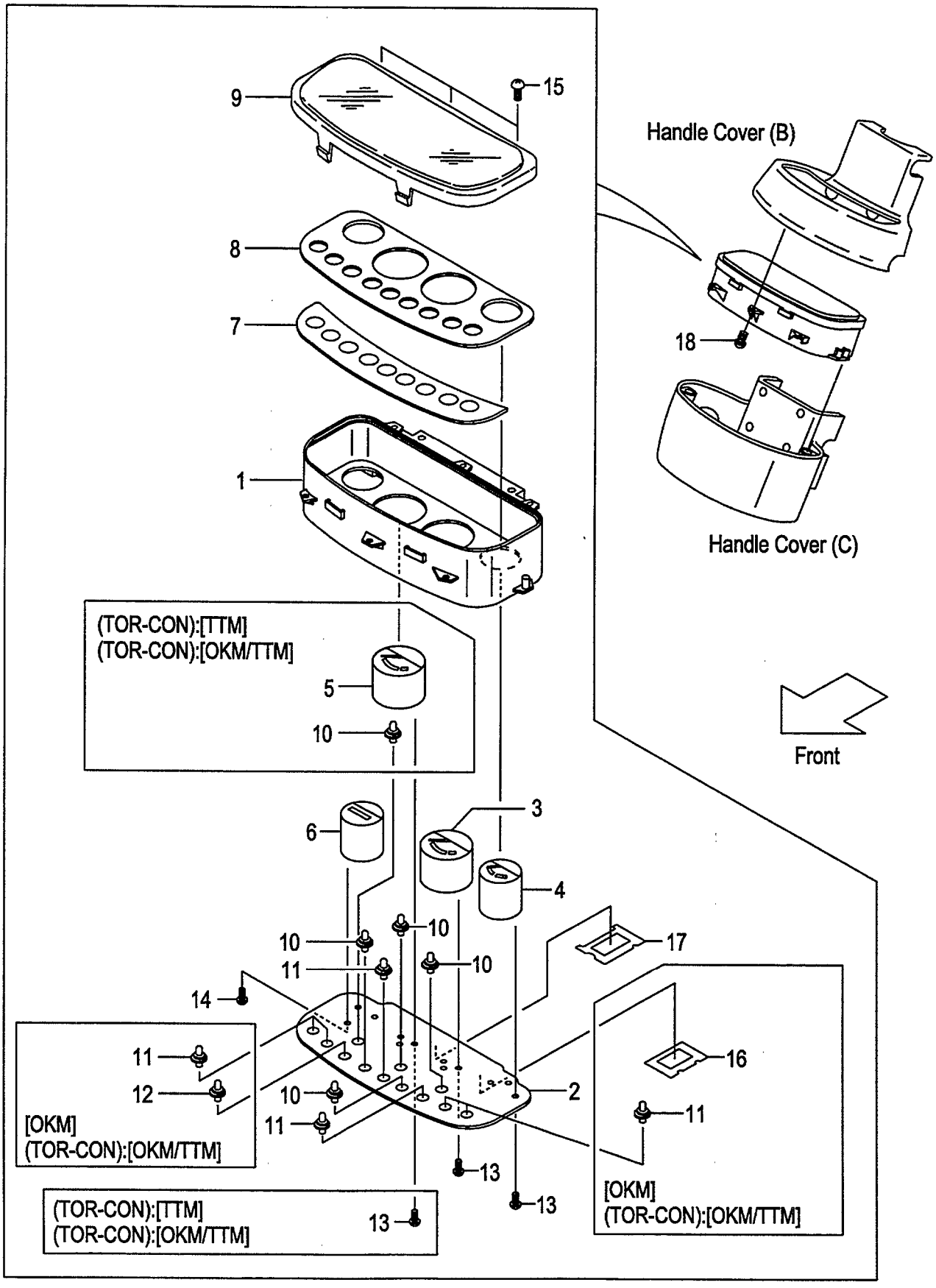

A:FD30C7
B:FD30T7
C:FD30W7

FIG.18
(F6032420)

Item No	Part No.	Mark	Description		Req'd	Remarks : Serial No.
A1	217G2-40301		METER-ASSY,COMBINATION	ﾒｰﾀｱｯｾﾝ	1	INC.1-4,6-11,13-15,17
-	517G6-20101		METER-ASSY,COMBINATION	ﾒｰﾀｱｯｾﾝ	1	[OKM] INC.1-4,6-17
-	517H8-80101		METER-ASSY,COMBINATION	ﾒｰﾀｱｯｾﾝ	1	B
						[TTM] INC.1-11,13-15,17
-	517G6-20201		METER-ASSY,COMBINATION	ﾒｰﾀｱｯｾﾝ	1	B
						[OKM/TTM] INC.1-17
1	216G2-43201		HOUSING	ﾊｳｼﾞﾝｸﾞ	1	
2	216G2-43221		CIRCUIT,PRINTED	ｻｰｷｯﾄ	1	
-	516G6-22051		CIRCUIT,PRINTED	ｻｰｷｯﾄ	1	[OKM]
-	516G6-22051		CIRCUIT,PRINTED	ｻｰｷｯﾄ	1	B
						[OKM/TTM]
3	216G2-43231		GAUGE,WATER-TEMP	ｹﾞｰｼﾞ	1	
4	216G2-43241		GAUGE,FUEL	ｹﾞｰｼﾞ	1	
5	216G2-43251		GAUGE,OIL-TEMP	ｹﾞｰｼﾞ	1	B
						[TTM][OKM/TTM]
6	216G2-43261		METER,HOUR	ﾒｰﾀ	1	
7	216G2-43271		LENS,WARNING	ﾚﾝｽﾞ	1	
8	216G2-43281		PLATE,SHADOW	ﾌﾟﾚｰﾄ	1	
-	216G2-43291		PLATE,SHADOW	ﾌﾟﾚｰﾄ	1	B
						[TTM][OKM/TTM]
9	216G2-43301		COVER,FRONT	ｶﾊﾞｰ	1	
10	222A2-42331		SOCKET & BULB	ｿｹｯﾄ&ﾊﾞﾙﾌﾞ	4	(14V/1.4W)
-	222A2-42331		SOCKET & BULB	ｿｹｯﾄ&ﾊﾞﾙﾌﾞ	5	B
						[TTM][OKM/TTM](14V/1.4W)
11	222A2-42401		SOCKET & BULB	ｿｹｯﾄ&ﾊﾞﾙﾌﾞ	2	(13.5V/2W)
-	222A2-42401		SOCKET & BULB	ｿｹｯﾄ&ﾊﾞﾙﾌﾞ	6	[OKM](13.5V/2W)
-	222A2-42401		SOCKET & BULB	ｿｹｯﾄ&ﾊﾞﾙﾌﾞ	6	B
						[OKM/TTM](13.5V/2W)
12	222A2-42341		SOCKET & BULB	ｿｹｯﾄ&ﾊﾞﾙﾌﾞ	1	[OKM](14V/3W)
-	222A2-42341		SOCKET & BULB	ｿｹｯﾄ&ﾊﾞﾙﾌﾞ	1	B
						[OKM/TTM](14V/3W)
13	229F2-42421		SCREW	ｽｸﾘｭ	6	
-	229F2-42421		SCREW	ｽｸﾘｭ	9	B
						[TTM][OKM/TTM]
14	229F2-42431		SCREW	ｽｸﾘｭ	3	
15	222A2-42361		SCREW	ｽｸﾘｭ	3	
16	516G6-22031		GASKET	ｶﾞｽｹｯﾄ	1	[OKM]
-	516G6-22031		GASKET	ｶﾞｽｹｯﾄ	1	B
						[OKM/TTM]
17	216G2-43161		GASKET	ｶﾞｽｹｯﾄ	1	
18	222A2-42031		SCREW	ｽｸﾘｭ	5	

FIG.19 STEERING SHAFT COVER (CLUTCH)(OIL CLUTCH)

(F6032430) ステアリングシャフトカバー

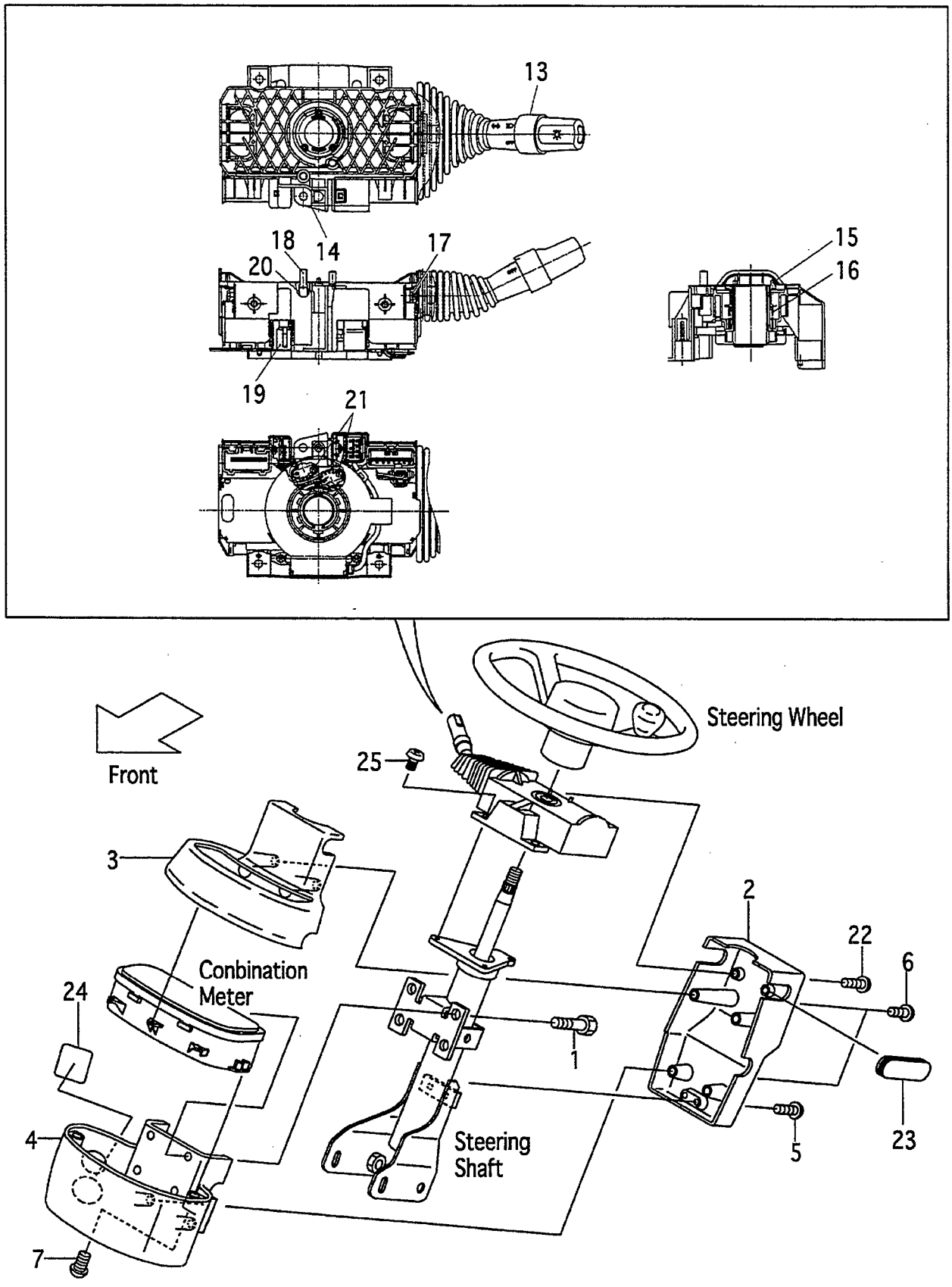

A:FD30C7
B:FD30W7

FIG.19
(F6032430)

Item No	Part No.	Mark	Description		Req'd	Remarks : Serial No.
1	01185-06016		BOLT	ﾎﾞﾙﾄ	4	
2	239A4-12501		COVER,HANDLE,A	ｶﾊﾞｰ	1	
3	239A4-12511		COVER,HANDLE,B	ｶﾊﾞｰ	1	
4	239A4-12521		COVER,HANDLE,C	ｶﾊﾞｰ	1	
-	539A7-72001		COVER,HANDLE,C	ｶﾊﾞｰ	1	[SWD]
5	214A6-42771		SCREW	ｽｸﾘｭ	2	
6	222A2-42031		SCREW	ｽｸﾘｭ	4	
7	216G4-12091		SCREW	ｽｸﾘｭ	2	
8	04913-11200	+	BAND	ﾊﾞﾝﾄﾞ	1	
9	216G2-42131	+	BAND	ﾊﾞﾝﾄﾞ	14	
10	04913-10100	+	BAND	ﾊﾞﾝﾄﾞ	6	
11	04913-11100	+	BAND	ﾊﾞﾝﾄﾞ	2	
12	04913-10200	+	BAND	ﾊﾞﾝﾄﾞ	2	
A1	239A2-40501		SWITCH-ASSY,COMBINATION	ｽｲｯﾁｱｯｾﾝ	1	INC.13-21
13	280C2-42331		SWITCH,TURN-SIGNAL	ｽｲｯﾁ	1	
14	NO PART NO.	#	BODY	ﾎﾞﾃﾞｨ	1	
15	NO PART NO.	#	CAM,CANCEL,RH	ｶﾑ	1	
16	NO PART NO.	#	SPRING	ｽﾌﾟﾘﾝｸﾞ	1	
17	NO PART NO.	#	SCREW	ｽｸﾘｭ	4	
18	280C2-42351		CONTACT,HORN	ｺﾝﾀｸﾄ	2	
19	NO PART NO.	#	CODE,CP-HORN	ｺｰﾄﾞ	1	
20	NO PART NO.	#	SPRING	ｽﾌﾟﾘﾝｸﾞ	2	
21	NO PART NO.	#	SCREW	ｽｸﾘｭ	2	
22	209K2-43001		SCREW	ｽｸﾘｭ	2	
23	239A4-12541		GROMMET,HANDLE-COVER	ｸﾞﾛﾒｯﾄ	1	
24	229F6-42201		SEAL,PANEL-COVER,A	ｼｰﾙ	1	
25	01033-05014		SCREW	ｽｸﾘｭ	3	

FIG.20 STEERING SHAFT COVER (TOR-CON)

(F6032440) ステアリング゛シャフトカバ゛ー

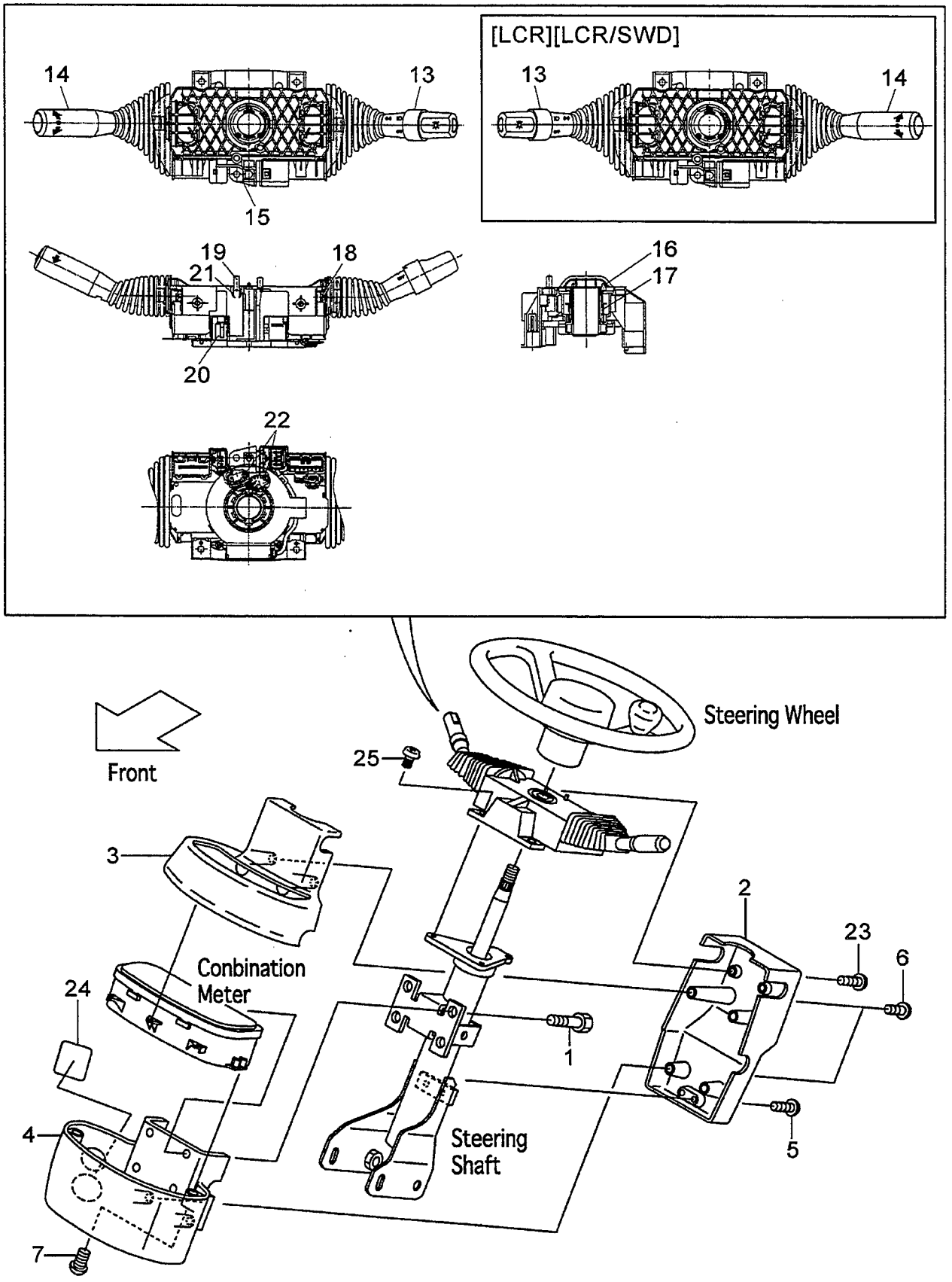

FIG.20
(F6032440)

A:FD30T7

Item No	Part No.	Mark	Description		Req'd	Remarks : Serial No.
1	01185-06016		BOLT	ﾎﾞﾙﾄ	4	
2	239A4-12501		COVER,HANDLE,A	ｶﾊﾞｰ	1	
3	239A4-12511		COVER,HANDLE,B	ｶﾊﾞｰ	1	
4	239A4-12521		COVER,HANDLE,C	ｶﾊﾞｰ	1	
-	539A7-72001		COVER,HANDLE,C	ｶﾊﾞｰ	1	[SWD][LCR/SWD]
5	214A6-42771		SCREW	ｽｸﾘｭ	2	
6	222A2-42031		SCREW	ｽｸﾘｭ	4	
7	216G4-12091		SCREW	ｽｸﾘｭ	2	
8	04913-11200	+	BAND	ﾊﾞﾝﾄﾞ	1	
9	216G2-42131	+	BAND	ﾊﾞﾝﾄﾞ	14	
10	04913-10100	+	BAND	ﾊﾞﾝﾄﾞ	6	
11	04913-11100	+	BAND	ﾊﾞﾝﾄﾞ	2	
12	04913-10200	+	BAND	ﾊﾞﾝﾄﾞ	2	
A1	209K2-40501		SWITCH-ASSY,COMBINATION	ｽｲｯﾁｱｯｾﾝ	1	INC.13-22
-	509K2-30101		SWITCH-ASSY,COMBINATION	ｽｲｯﾁｱｯｾﾝ	1	[LCR][LCR/SWD] INC.13-22
13	280C2-42331		SWITCH,TURN-SIGNAL	ｽｲｯﾁ	1	
-	280C2-42301		SWITCH,TURN-SIGNAL	ｽｲｯﾁ	1	[LCR][LCR/SWD]
14	280C2-42341		SWITCH,DIRECTION	ｽｲｯﾁ	1	
-	280C2-42311		SWITCH,DIRECTION	ｽｲｯﾁ	1	[LCR][LCR/SWD]
15	NO PART NO.	#	BODY	ﾎﾞﾃﾞｨ	1	
16	NO PART NO.	#	CAM,CANCEL,RH	ｶﾑ	1	
-	NO PART NO.	#	CAM,CANCEL,RH	ｶﾑ	1	[LCR][LCR/SWD]
17	NO PART NO.	#	SPRING	ｽﾌﾟﾘﾝｸﾞ	1	
18	NO PART NO.	#	SCREW	ｽｸﾘｭ	4	
19	280C2-42351		CONTACT,HORN	ｺﾝﾀｸﾄ	2	
20	NO PART NO.	#	CODE,CP-HORN	ｺｰﾄﾞ	1	
21	NO PART NO.	#	SPRING	ｽﾌﾟﾘﾝｸﾞ	2	
22	NO PART NO.	#	SCREW	ｽｸﾘｭ	2	
23	209K2-43001		SCREW	ｽｸﾘｭ	2	
24	229F6-42201		SEAL,PANEL-COVER,A	ｼｰﾙ	1	
25	01033-05014		SCREW	ｽｸﾘｭ	3	

FIG.21 ELECTRIC PARTS

(F6032460) エレクトリックパーツ

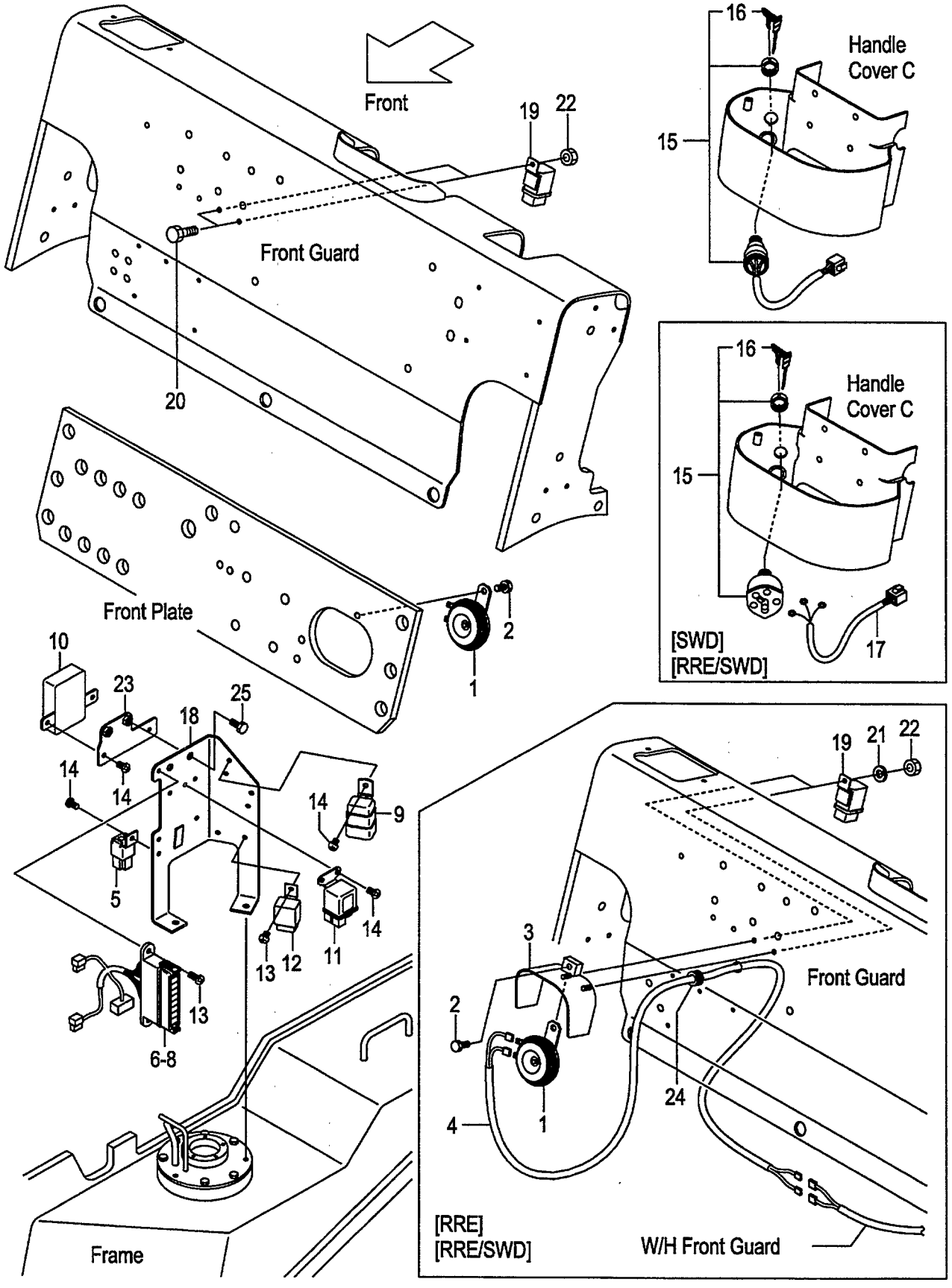

A:FD30C7 FD30T7
B:FD30W7

FIG.21
(F6032460)

Item No	Part No.	Mark	Description		Req'd	Remarks : Serial No.
1	216G2-43651		HORN	ﾎｰﾝ	1	
2	01185-08016		BOLT	ﾎﾞﾙﾄ	1	
-	01185-08012		BOLT	ﾎﾞﾙﾄ	1	[RRE][RRE/SWD]
3	539A9-92301		BRACKET,HORN	ﾌﾞﾗｹｯﾄ	1	[RRE][RRE/SWD]
4	539A9-92351		WIRE-HARNESS,RRE	ﾜｲﾔﾊｰﾈｽ	1	[RRE][RRE/SWD]
5	216G2-43711		UNIT,FLASHER	ﾕﾆｯﾄ	1	
6	235C2-40301		BOX,FUSE	ﾎﾞｯｸｽ	1	INC.7,8
7	214T2-42311		FUSE,10A	ﾋｭｰｽﾞ	7	
8	214T2-42321		FUSE,30A	ﾋｭｰｽﾞ	1	
9	216G2-42321		RELAY,STARTER	ﾘﾚｰ	1	
10	242F2-42301		TIMER,QGS-CONTROLLER	ﾀｲﾏ	1	
11	242F2-42311		RELAY,GLOW-PLUG	ﾘﾚｰ	1	
12	242F2-42321		DETECTOR	ﾃﾞｨﾃｸﾀ	1	
13	214A2-42621		SCREW	ｽｸﾘｭ	3	
14	214A2-42611		SCREW	ｽｸﾘｭ	6	
15	216G2-42311		SWITCH,STARTER	ｽｲｯﾁ	1	INC.16
-	24352-42521		SWITCH,STARTER	ｽｲｯﾁ	1	[SWD][RRE/SWD] INC.16
16	216G2-43401		KEY,SPARE,511323	ｷｰ	1	(1SET=2PCS)
-	216G2-43411		KEY,SPARE,512421	ｷｰ	(1)	(1SET=2PCS)
-	216G2-43421		KEY,SPARE,513454	ｷｰ	(1)	(1SET=2PCS)
-	93956-59279		KEY,SPARE,511323	ｷｰ	1	[SWD][RRE/SWD](1SET=2PCS)
17	534A7-72001		WIRE,LEAD	ﾜｲﾔ	1	[SWD][RRE/SWD]
18	218G2-42001		BRACKET,ELECTRIC	ﾌﾞﾗｹｯﾄ	1	
19	26062-42881		RELAY,12V	ﾘﾚｰ	2	
20	239A5-42381		BOLT	ﾎﾞﾙﾄ	2	(WITHOUT RRE,RRE/SWD)
21	02010-00006		WASHER	ﾜｯｼｬ	2	[RRE][RRE/SWD]
22	01400-00006		NUT	ﾅｯﾄ	2	
23	242F2-42001		BRACKET,QGS-CONTROL	ﾌﾞﾗｹｯﾄ	1	
24	205A2-63311		GROMMET	ｸﾞﾛﾒｯﾄ	1	[RRE][RRE/SWD]
25	01183-08016		BOLT	ﾎﾞﾙﾄ	2	

FIG.22 BATTERY
(F6032480) ﾊﾞｯﾃﾘ

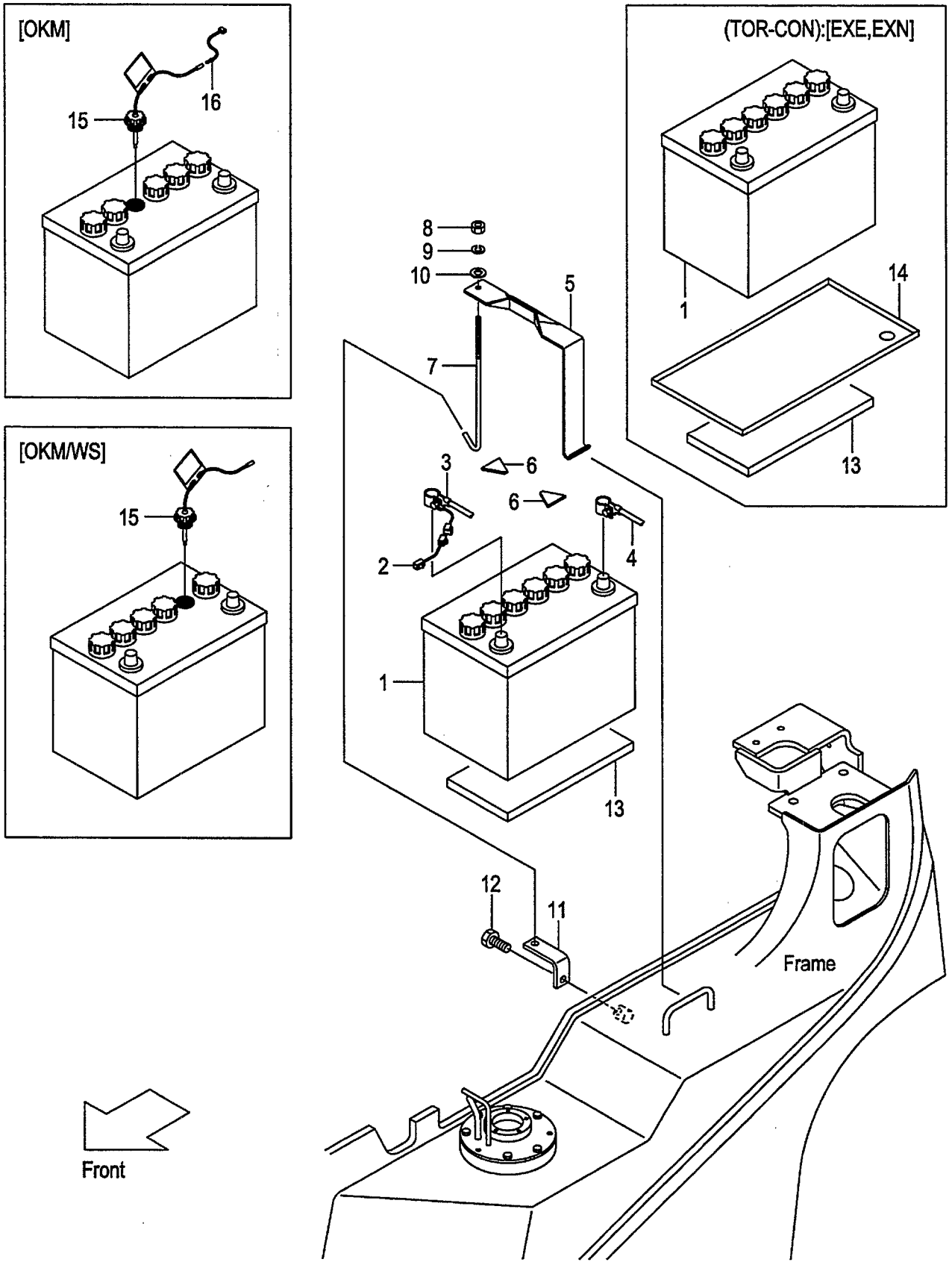

A:FD30C7
B:FD30T7
C:FD30W7

FIG.22
(F6032480)

Item No	Part No.	Mark	Description		Req'd	Remarks : Serial No.
1	230C2-42301		BATTERY,WET,95D31R	ﾊﾞｯﾃﾘ	1	
-	534A7-02001		BATTERY,WET,115D31R	ﾊﾞｯﾃﾘ	1	[WS]
2	25592-42081		WIRE,FUSIBLE-LINK	ﾜｲﾔ	1	
3	242F2-42151		CABLE,BATTERY(+)	ｹｰﾌﾞﾙ	1	
4	238A2-42151		CABLE,BATTERY(-)	ｹｰﾌﾞﾙ	1	
5	217G2-42021		HOLDER,BATTERY	ﾎﾙﾀﾞ	1	
6	216G2-43111		RUBBER	ﾗﾊﾞｰ	2	
7	256A2-42171		BOLT,ANCHOR	ﾎﾞﾙﾄ	1	
8	01420-00006		NUT	ﾅｯﾄ	1	
9	02010-00006		WASHER	ﾜｯｼｬ	1	
10	23452-42181		WASHER	ﾜｯｼｬ	1	
11	239A2-42101		HOOK,ANCHOR-BOLT	ﾌｯｸ	1	
12	01185-08016		BOLT	ﾎﾞﾙﾄ	1	
13	239B2-42301		RUBBER	ﾗﾊﾞｰ	1	
14	539A2-72121		CASE,BATTERY	ｹｰｽ	1	B [EXE][EXN]
15	521A2-42001		CAP,BATTERY	ｷｬｯﾌﾟ	1	[OKM]
-	522A2-42001		CAP,BATTERY	ｷｬｯﾌﾟ	1	[OKM/WS]
16	539A6-22021		WIRE,LEAD	ﾜｲﾔ	1	[OKM](WITHOUT OKM/WS)

FIG.23 FRONT GUARD WIRE HARNESS (CLUTCH & OIL CLUTCH)

(F60324C0) ﾌﾛﾝﾄｶﾞｰﾄﾞﾜｲﾔﾊｰﾈｽ

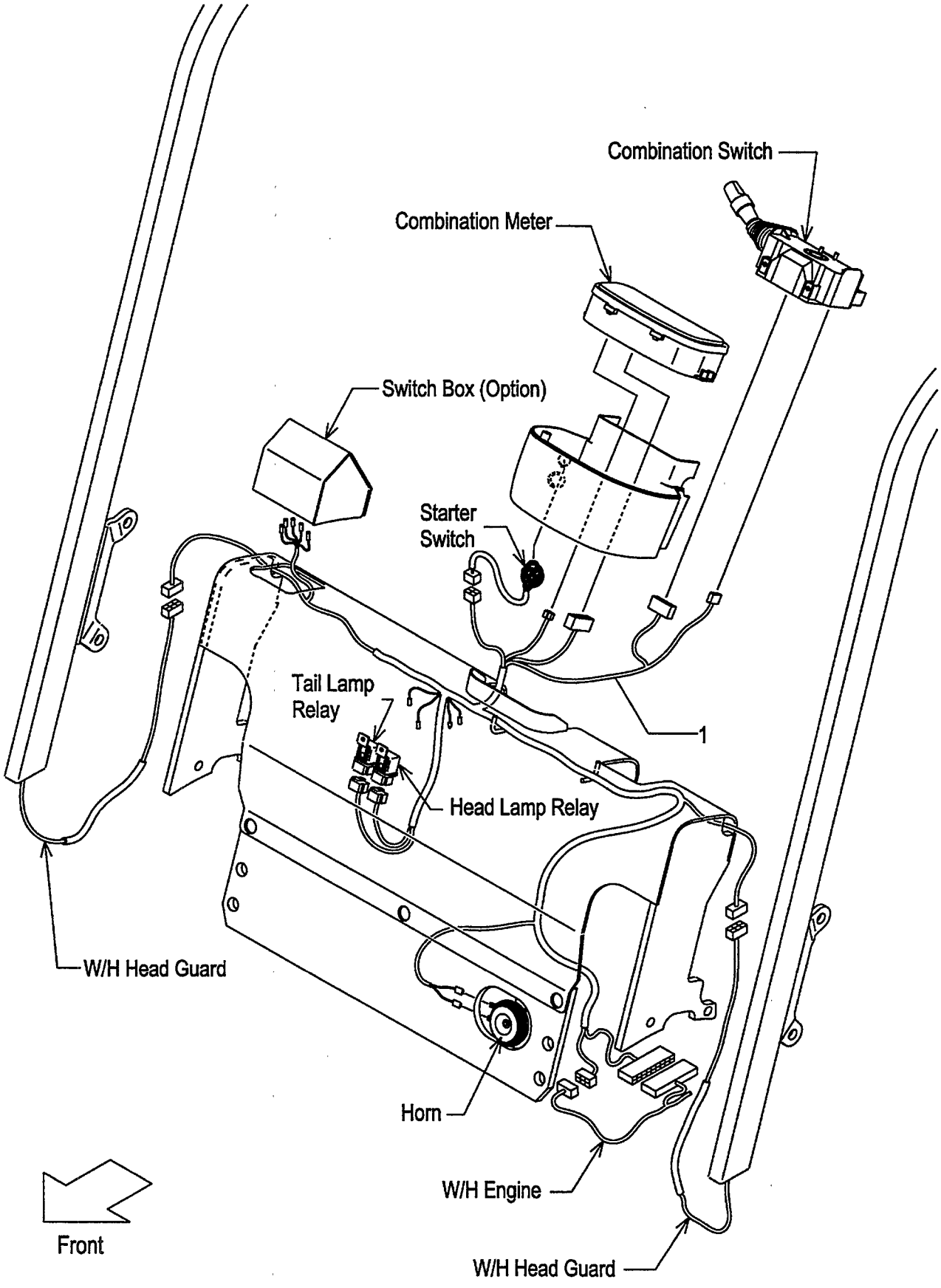

A:FD30C7
B:FD30W7

FIG.23
(F60324C0)

Item No	Part No.	Mark	Description	Req'd	Remarks : Serial No.
1	239A2-42201		WIRE-HARNESS,F.GUARD ﾜｲﾔﾊｰﾈｽ	1	
-	539A3-72151		WIRE-HARNESS,F.GUARD ﾜｲﾔﾊｰﾈｽ	1	[FC]

FIG.24 FRONT GUARD WIRE HARNESS (TOR-CON)

(F60324D0) フロントガードワイヤハーネス

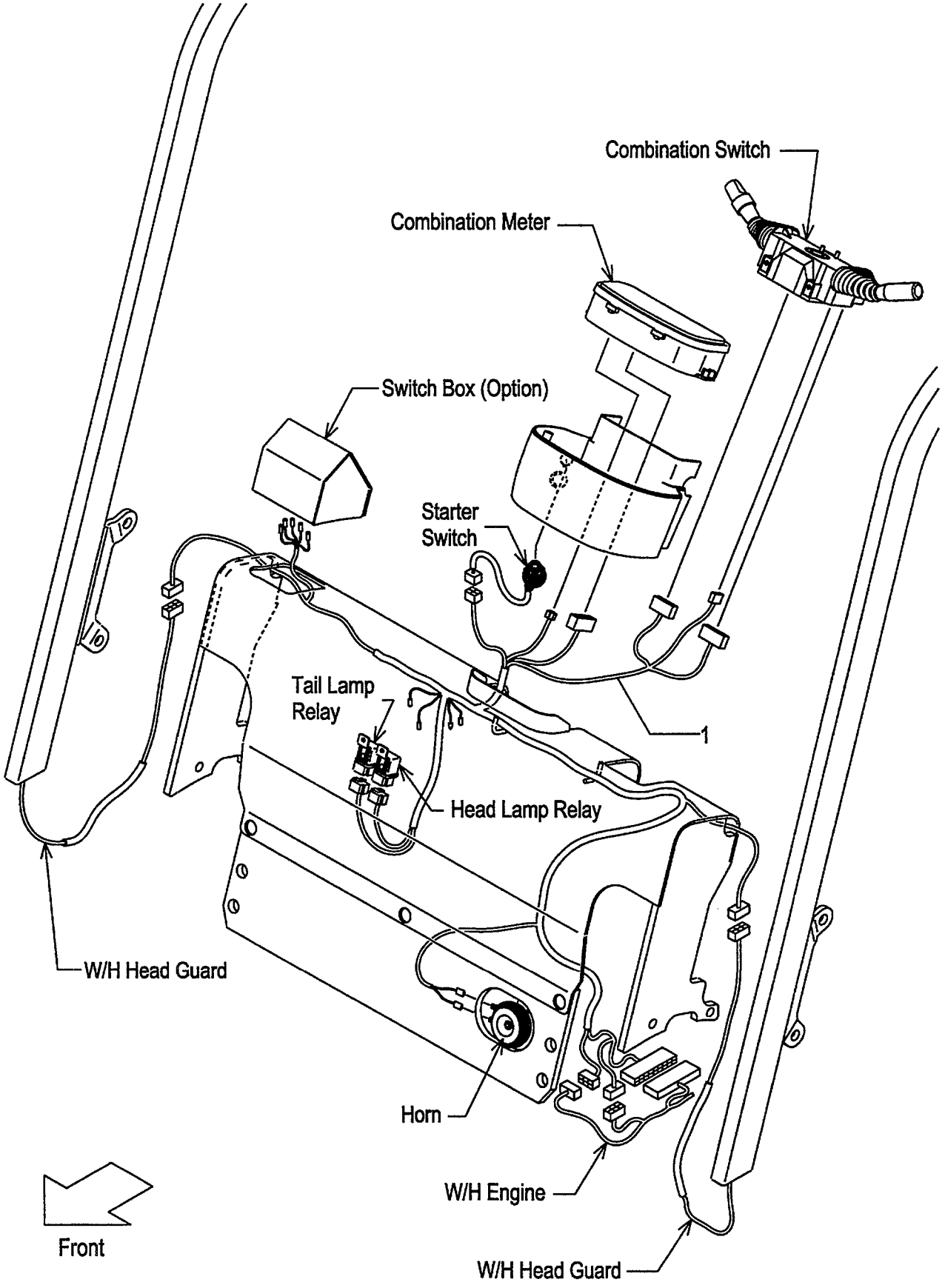

FIG.24
(F60324D0)

A:FD30T7

Item No	Part No.	Mark	Description	Req'd	Remarks : Serial No.
1	239B2-42201		WIRE-HARNESS,F.GUARD ﾜｲﾔﾊｰﾈｽ	1	
-	539B3-82301		WIRE-HARNESS,F.GUARD ﾜｲﾔﾊｰﾈｽ	1	[EXE][EXN]
-	539B2-32201		WIRE-HARNESS,F.GUARD ﾜｲﾔﾊｰﾈｽ	1	[LCR]
-	539B3-72151		WIRE-HARNESS,F.GUARD ﾜｲﾔﾊｰﾈｽ	1	[FC]
-	539B3-72201		WIRE-HARNESS,F.GUARD ﾜｲﾔﾊｰﾈｽ	1	[FC/LCR]

FIG.25 ENGINE WIRE HARNESS (CLUTCH)(OIL CLUTCH)

(F60324H0) エンジンワイヤハーネス

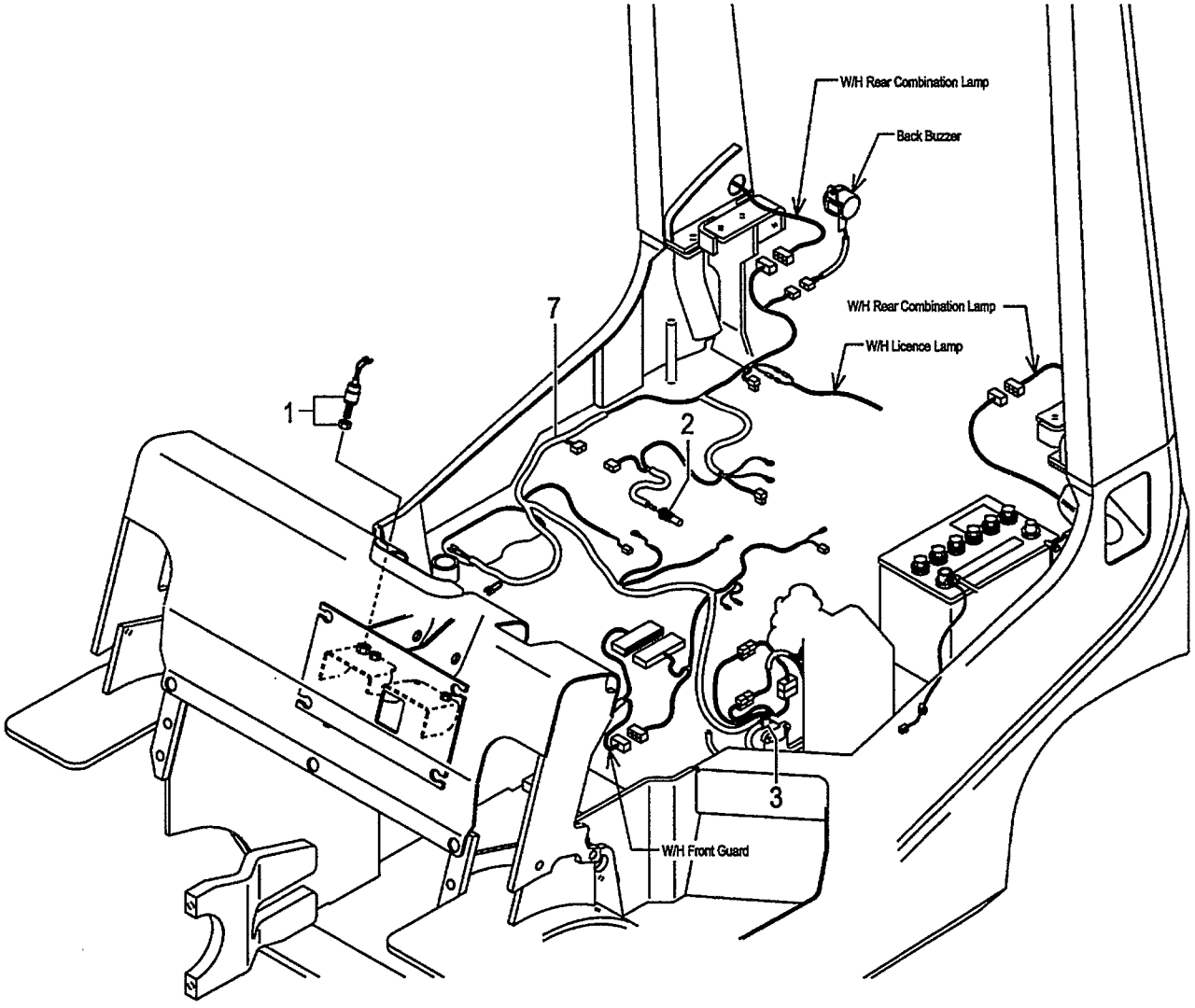

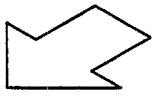

Front

A:FD30C7
B:FD30W7

FIG.25
(F60324H0)

Item No	Part No.	Mark	Description		Req'd	Remarks : Serial No.
1	23232-42072		SWITCH,STOP-LAMP	ｽｲｯﾁ	1	
2	23652-44001		UNIT,SENDING	ﾕﾆｯﾄ	1	
3	214A2-42331		CLIP	ｸﾘｯﾌﾟ	5	
4	01100-06010	+	BOLT	ﾎﾞﾙﾄ	1	
5	02010-00006	+	WASHER	ﾜｯｼｬ	1	
6	02000-00006	+	WASHER	ﾜｯｼｬ	1	
7	242F2-42251		WIRE-HARNESS,ENGINE	ﾜｲﾔﾊｰﾈｽ	1	
-	542F3-72001		WIRE-HARNESS,ENGINE	ﾜｲﾔﾊｰﾈｽ	1	[FC]

FIG.26 ENGINE WIRE HARNESS (TOR-CON)

(F60324K0) エンジンワイヤハーネス

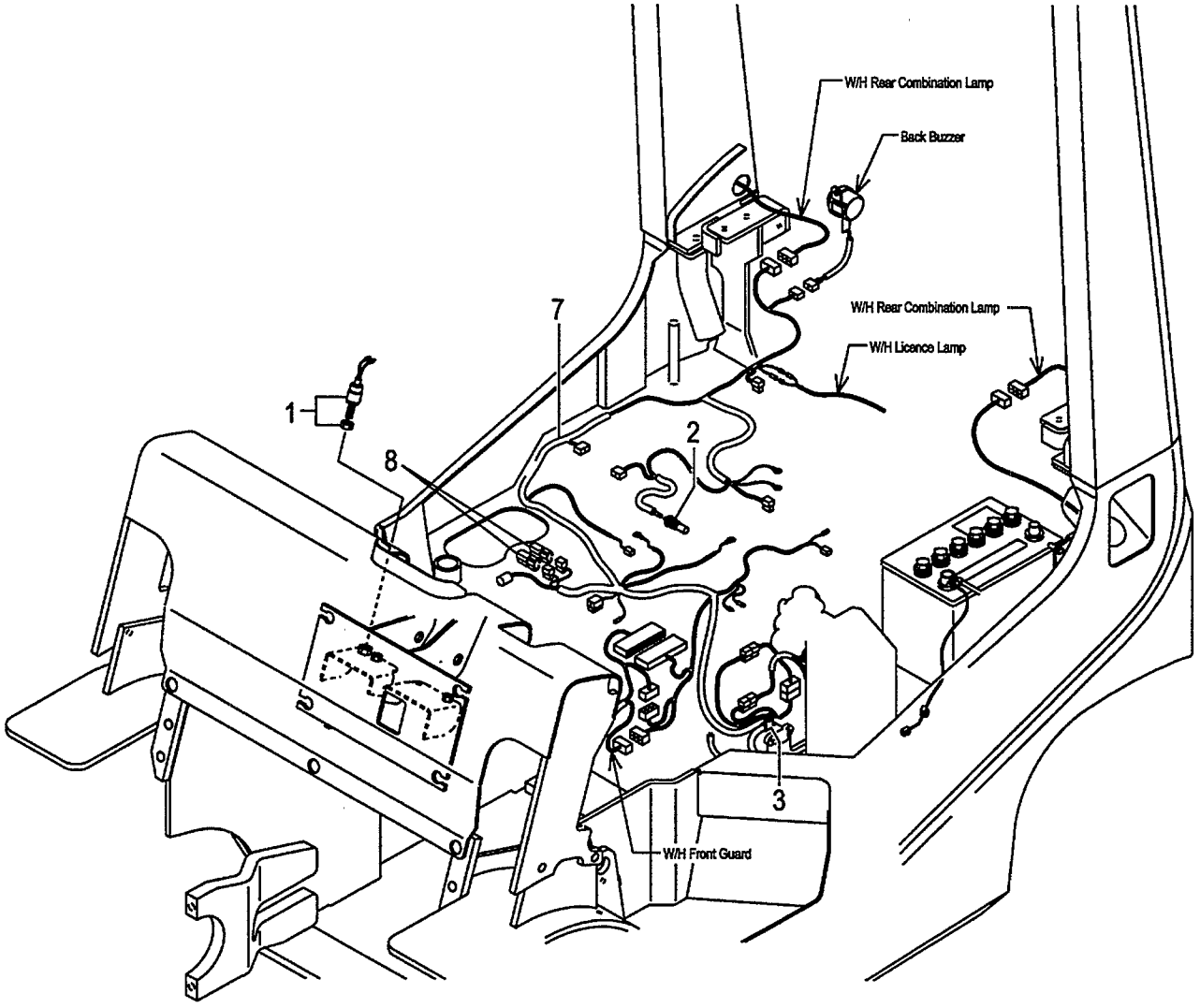

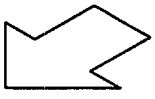

Front

FIG.26
(F60324K0)

A:FD30T7

Item No	Part No.	Mark	Description		Req'd	Remarks : Serial No.
1	23232-42072		SWITCH,STOP-LAMP	ｽｲｯﾁ	1	
2	23652-44001		UNIT,SENDING	ﾕﾆｯﾄ	1	
3	214A2-42331		CLIP	ｸﾘｯﾌﾟ	5	
4	01100-06010	+	BOLT	ﾎﾞﾙﾄ	1	
5	02010-00006	+	WASHER	ﾜｯｼｬ	1	
6	02000-00006	+	WASHER	ﾜｯｼｬ	1	
7	242G2-42251		WIRE-HARNESS,ENGINE	ﾜｲﾔﾊｰﾈｽ	1	
-	542G3-72001		WIRE-HARNESS,ENGINE	ﾜｲﾔﾊｰﾈｽ	1	[FC]
8	230C2-42201		DIODE,3A	ﾀﾞｲｵｰﾄﾞ	2	

FIG.27 LIGHT UNIT
(F6032490) ライトユニット

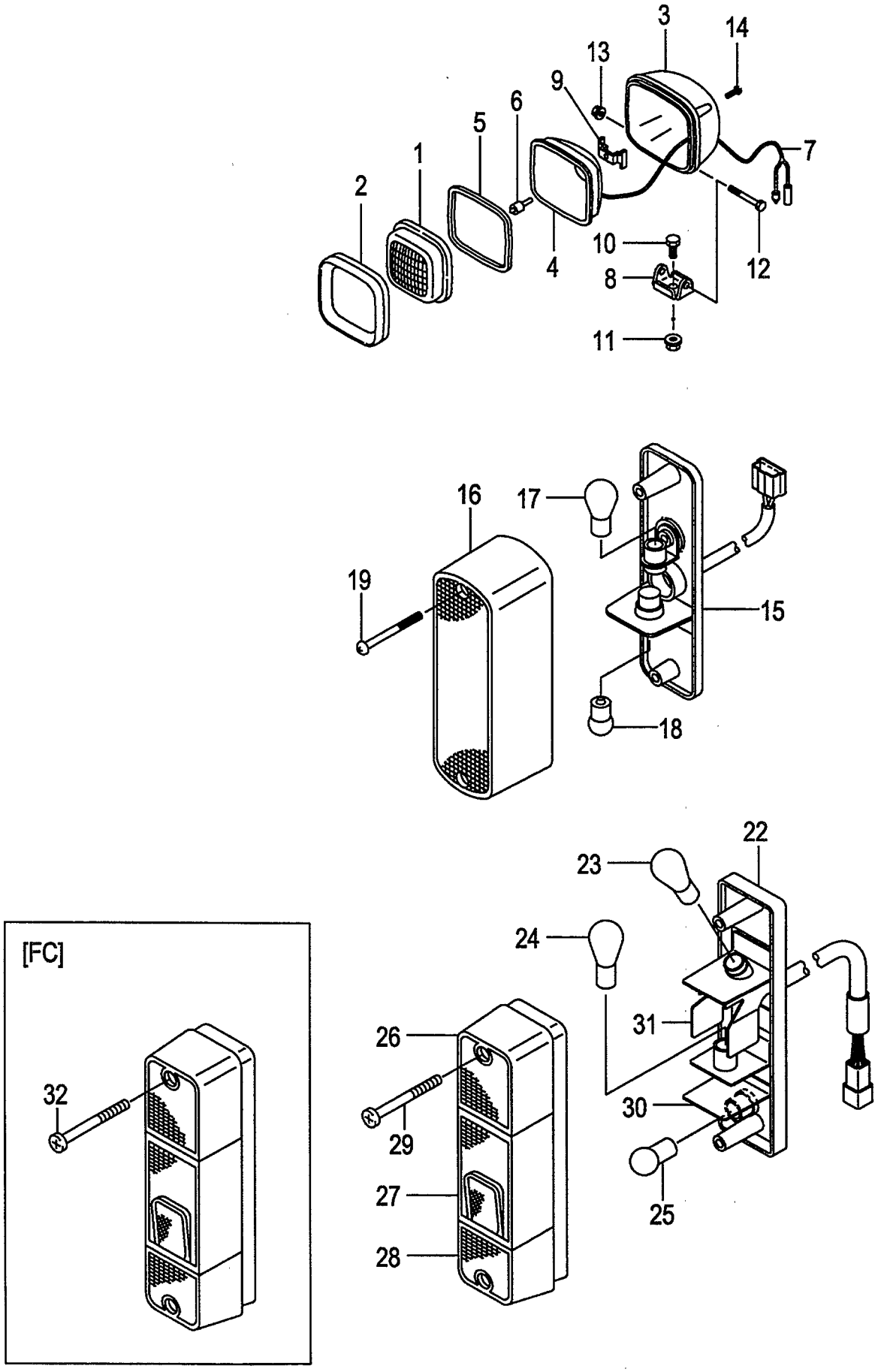

A:FD30C7 FD30T7 FD30W7

Item No	Part No.	Mark	Description		Req'd	Remarks : Serial No.
A1	216G2-40602		LAMP-ASSY,HEAD	ﾍｯﾄﾞﾗﾝﾌﾟｱｯｾﾝ	2	INC.1-14
1	216G2-43502		LENS	ﾚﾝｽﾞ	2	
2	216G2-43631		RIM	ﾘﾑ	2	
3	NO PART NO.	#	HOUSING	ﾊｳｼﾞﾝｸﾞ	2	
4	NO PART NO.	#	REFLECTOR	ﾘﾌﾚｸﾀ	2	
5	216G2-43531		GASKET	ｶﾞｽｹｯﾄ	2	
6	216G2-43542		BULB,12V/55W	ﾊﾞﾙﾌﾞ	2	
7	216G2-43551		WIRE,LEAD	ﾜｲﾔ	2	
8	216G2-43562		BRACKET	ﾌﾞﾗｹｯﾄ	2	
9	216G2-43571		SPRING	ｽﾌﾟﾘﾝｸﾞ	2	
10	216G2-43582		BOLT	ﾎﾞﾙﾄ	2	
11	216G2-43592		NUT	ﾅｯﾄ	2	
12	216G2-43602		BOLT	ﾎﾞﾙﾄ	2	
13	216G2-43611		NUT	ﾅｯﾄ	2	
14	216G2-43622		SCREW	ｽｸﾘｭ	8	
A2	216G2-40701		LAMP-ASSY,FRONT-COMBINATION	ﾗﾝﾌﾟｱｯｾﾝ	2	INC.15-19
15	NO PART NO.	#	BODY	ﾎﾞﾃﾞｨ	2	
16	216G2-40731		LENS	ﾚﾝｽﾞ	2	
17	216G2-40711		BULB,12V/27W	ﾊﾞﾙﾌﾞ	2	
18	216G2-40721		BULB,12V/10W	ﾊﾞﾙﾌﾞ	2	
19	NO PART NO.		SCREW	ｽｸﾘｭ	4	
20	239A2-42221	+	WIRE-HARNESS,H.GUARD	ﾜｲﾔﾊｰﾈｽ	2	
-	534A9-22211	+	WIRE-HARNESS,H.GUARD	ﾜｲﾔﾊｰﾈｽ	2	[HL][BKH]
21	04913-11100	+	BAND	ﾊﾞﾝﾄﾞ	2	(WITHOUT HL,BKH)
A3	214A2-40203		LAMP-ASSY,REAR-COMBINATION	ﾗﾝﾌﾟｱｯｾﾝ	2	INC.22-31
22	NO PART NO.	#	BODY	ﾎﾞﾃﾞｨ	2	
23	210F2-42011		BULB,12V/23W	ﾊﾞﾙﾌﾞ	2	
24	210F2-42021		BULB,12V/23,8W	ﾊﾞﾙﾌﾞ	2	
25	210F2-42031		BULB,12V/10W	ﾊﾞﾙﾌﾞ	2	
26	210F2-42201		LENS,PLASTIC	ﾚﾝｽﾞ	2	
27	210F2-42211		LENS,PLASTIC	ﾚﾝｽﾞ	2	
28	210F2-42221		LENS,PLASTIC	ﾚﾝｽﾞ	2	
29	01030-05065		SCREW	ｽｸﾘｭ	4	(WITHOUT FC)
30	210F2-42231		SHADE	ｼｪｰﾄﾞ	2	
31	214A2-44511		SHADE	ｼｪｰﾄﾞ	2	
32	514A3-72091		BOLT,PAN-HEAD	ﾎﾞﾙﾄ	4	[FC]

FIG.28 BACK BUZZER

(F60324A0) ﾊﾞｯｸﾌﾞｻﾞｰ

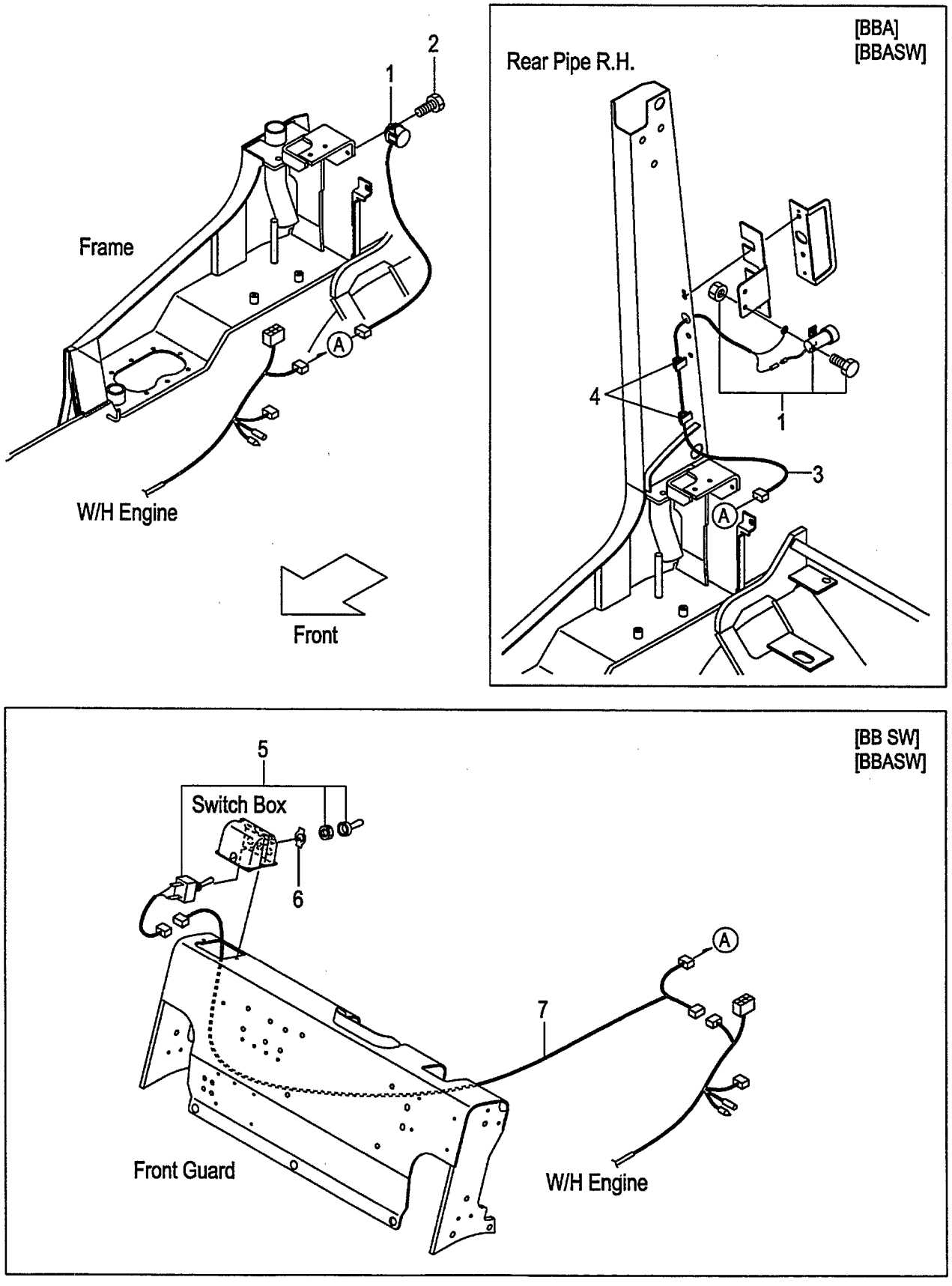

FIG.28
(F60324A0)

A:FD30C7 FD30T7 FD30W7

Item No	Part No.	Mark	Description		Req'd	Remarks : Serial No.
1	234A2-42301		BUZZER,BACK,12V	ﾌﾞｻﾞｰ	1	
-	214A2-44001		BUZZER,BACK,12V	ﾌﾞｻﾞｰ	1	[BBA][BBASW]
2	01185-08016		BOLT	ﾎﾞﾙﾄ	1	(WITHOUT BBA,BBASW)
3	516G1-32012		WIRE,LEAD	ﾜｲﾔ	1	[BBA][BBASW]
4	27732-42311		CLAMP,HARNESS	ｸﾗﾝﾌﾟ	2	[BBA][BBASW]
5	57042-72091		SWITCH	ｽｲｯﾁ	1	[BB SW][BBASW]
6	27652-62211		PLATE,SWITCH	ﾌﾟﾚｰﾄ	1	[BB SW][BBASW]
7	516G1-32002		WIRE,LEAD	ﾜｲﾔ	1	[BB SW][BBASW]

FIG.29 LICENSE LIGHT

(F60324L0) ライセンスライト

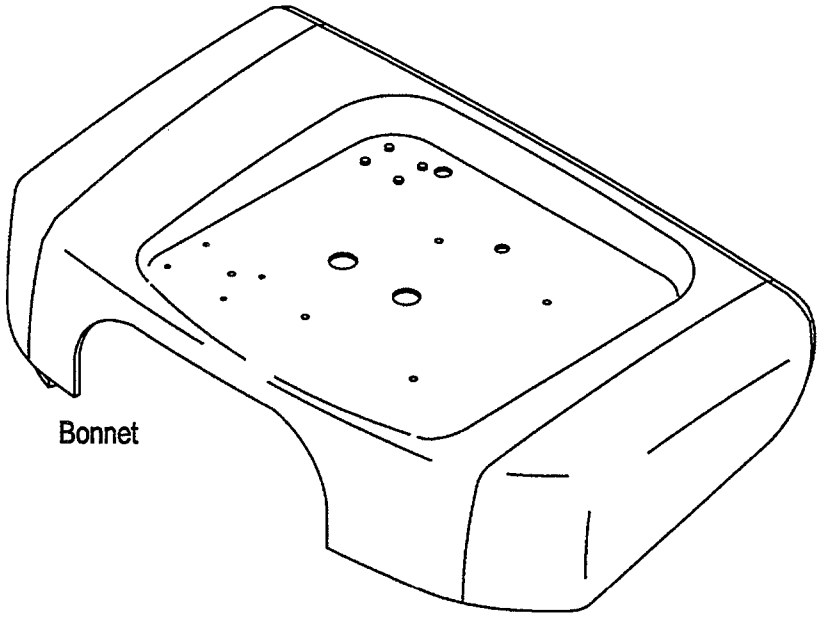

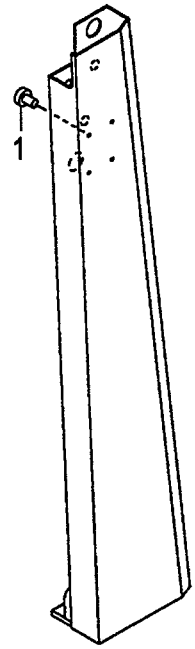

Rear Pipe L.H.

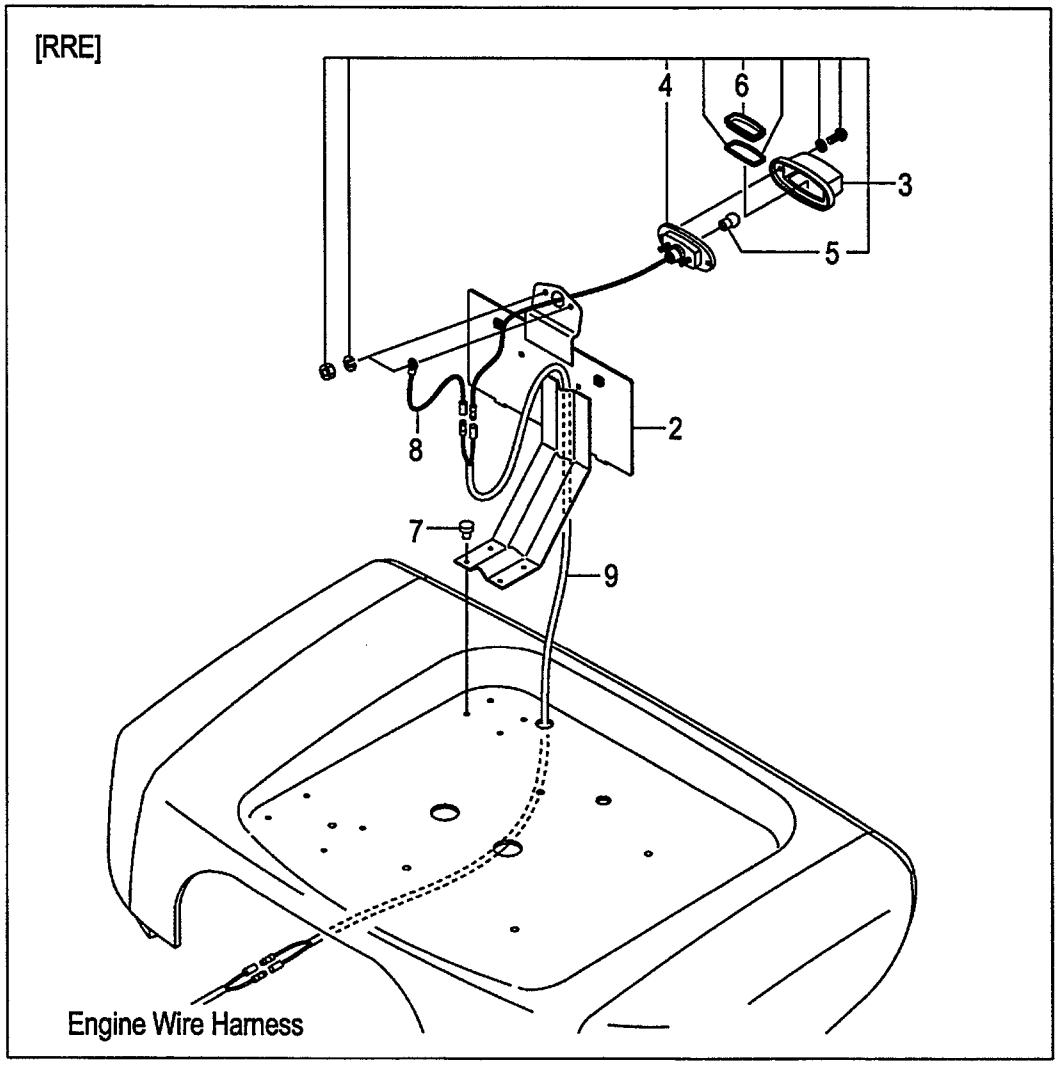

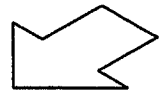

Front

FIG.29
(F60324L0)

A:FD30C7 FD30T7 FD30W7

Item No	Part No.	Mark	Description		Req'd	Remarks : Serial No.
1	25596-42361		RIVET,NYLON	ﾘﾍﾞｯﾄ	4	
-	25596-42361		RIVET,NYLON	ﾘﾍﾞｯﾄ	4	[RRE]
2	539A9-92101		BRACKET,NUMBER-PLATE	ﾌﾞﾗｹｯﾄ	1	[RRE]
3	22132-40202		LAMP,LICENCE	ﾗﾝﾌﾟ	1	[RRE] INC.4-6
4	NO PART NO.	#	BODY	ﾎﾞﾃﾞｨ	1	[RRE]
5	22132-40041		BULB,12V/10W	ﾊﾞﾙﾌﾞ	1	[RRE]
6	22192-42411		LENS,PLASTIC	ﾚﾝｽﾞ	1	[RRE]
7	22256-42001		RIVET	ﾘﾍﾞｯﾄ	4	[RRE]
8	222A2-42511		WIRE,LEAD	ﾜｲﾔ	1	[RRE]
9	558A9-92001		WIRE-HARNESS,LICENCE	ﾜｲﾔﾊｰﾈｽ	1	[RRE]

FIG.30 LICENSE LIGHT [SCB001/RRE]

(F60324M0) ライセンスライト

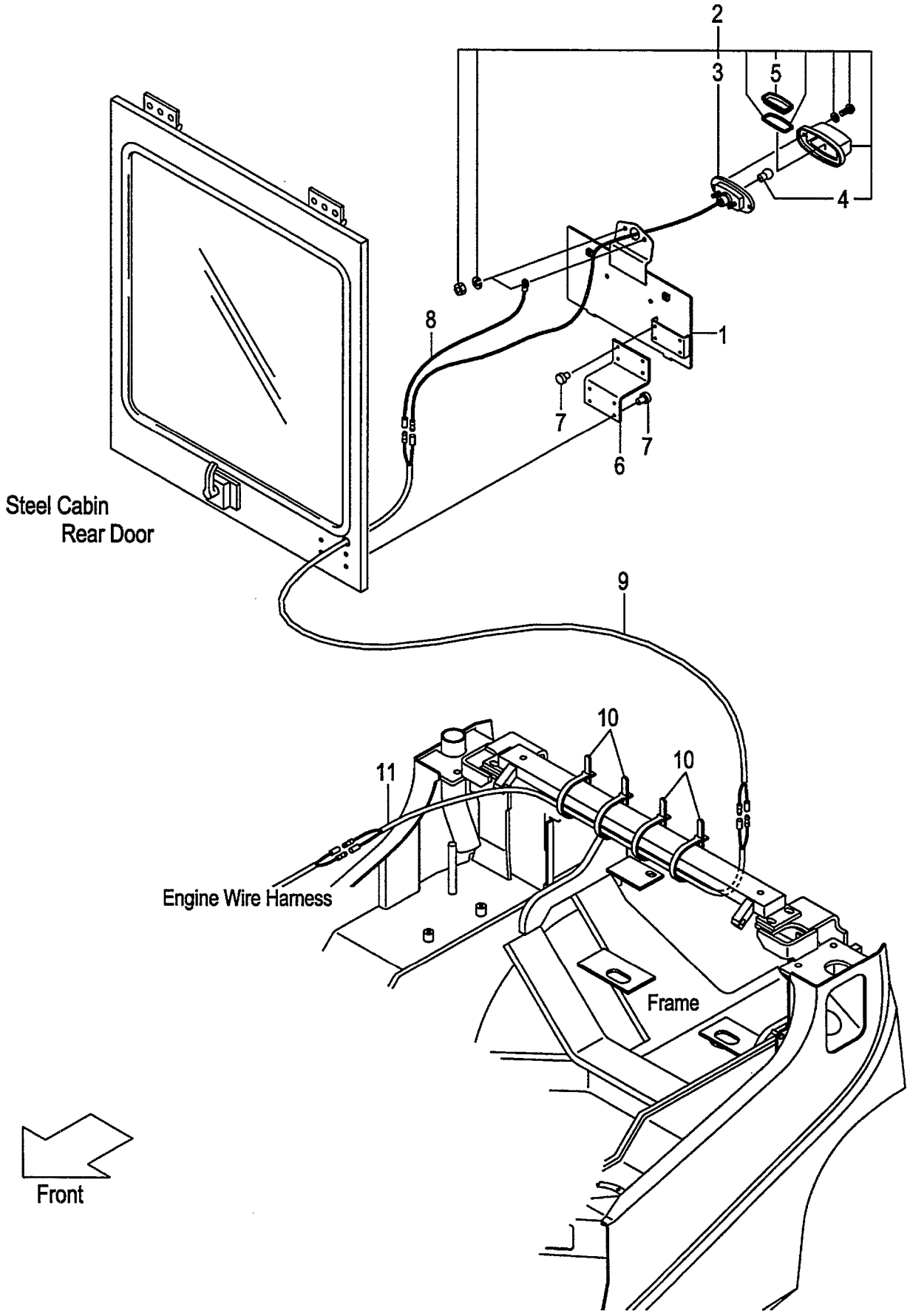

FIG.30
(F60324M0)

A:FD30C7 FD30T7 FD30W7

Item No	Part No.	Mark	Description	Req'd	Remarks : Serial No.
1	531A0-52521		BRACKET,NUMBER-PLATE ﾌﾞﾗｹｯﾄ	1	[SCB001/RRE]
2	22132-40202		LAMP,LICENCE ﾗﾝﾌﾟ	1	[SCB001/RRE] INC.3-5
3	NO PART NO.	#	BODY ﾎﾞﾃﾞｨ	1	[SCB001/RRE]
4	22132-40041		BULB,12V/10W ﾊﾞﾙﾌﾞ	1	[SCB001/RRE]
5	22192-42411		LENS,PLASTIC ﾚﾝｽﾞ	1	[SCB001/RRE]
6	539A5-32361		BRACKET ﾌﾞﾗｹｯﾄ	1	[SCB001/RRE]
7	22256-42001		RIVET ﾘﾍﾞｯﾄ	8	[SCB001/RRE]
8	222A2-42511		WIRE,LEAD ﾜｲﾔ	1	[SCB001/RRE]
9	534A9-92131		WIRE-HARNESS,LICENCE ﾜｲﾔﾊｰﾈｽ	1	[SCB001/RRE]
10	04913-11120		BAND ﾊﾞﾝﾄﾞ	4	[SCB001/RRE]
11	558A9-92001		WIRE-HARNESS,LICENCE ﾜｲﾔﾊｰﾈｽ	1	[SCB001/RRE]

FIG.31 LICENSE LIGHT [RRE/RW]

(F60324N0) ライセンスライト

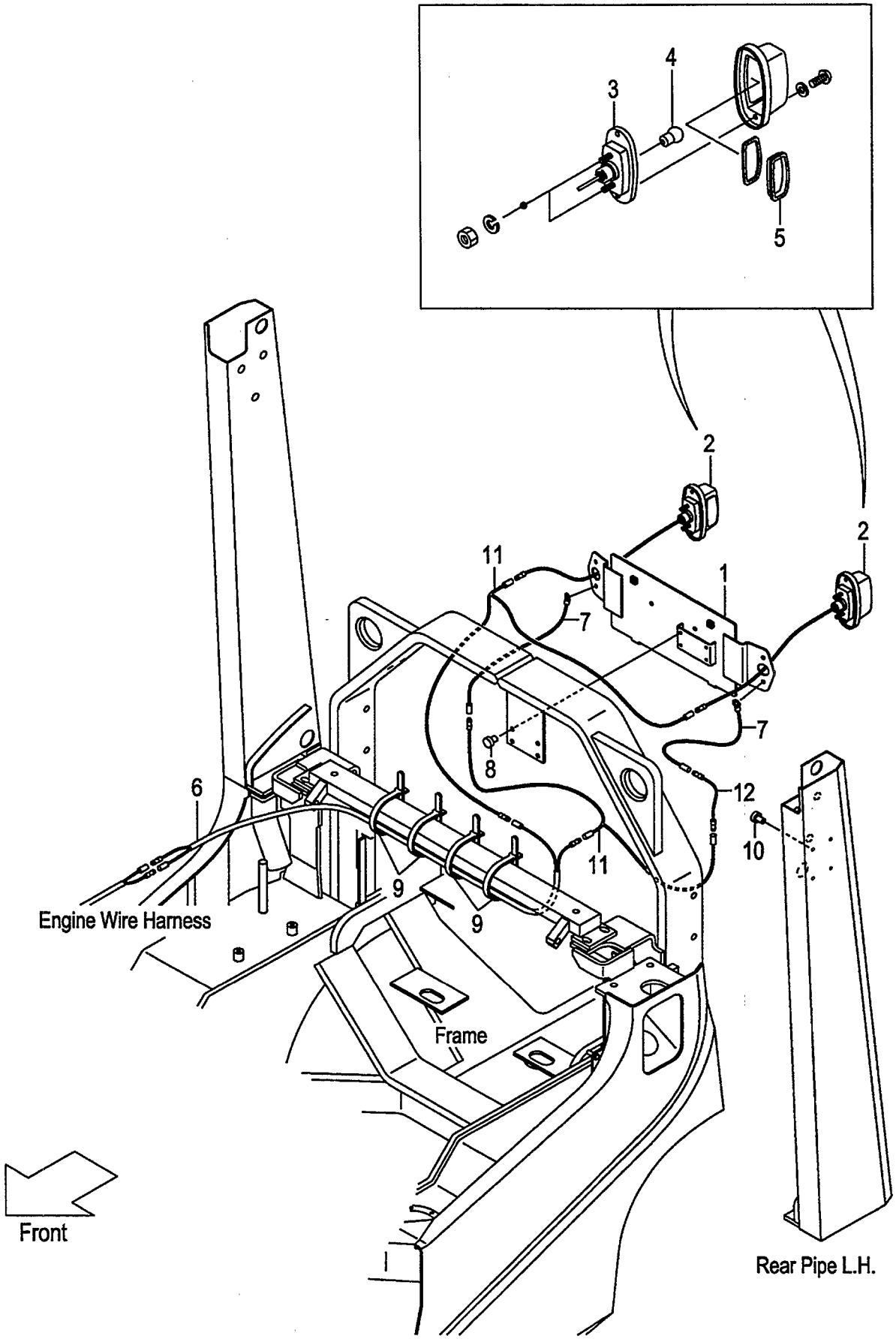

FIG.31
(F60324N0)

A:FD30C7 FD30T7 FD30W7

Item No	Part No.	Mark	Description	Req'd	Remarks : Serial No.
1	539C1-90151		BRACKET,NUMBER-PLATE ﾌﾞﾗｹｯﾄ	1	[RRE/RW]
2	22132-40202		LAMP,LICENCE ﾗﾝﾌﾟ	2	[RRE/RW] INC.3-5
3	NO PART NO.	#	BODY ﾎﾞﾃﾞｨ	2	[RRE/RW]
4	22132-40041		BULB,12V/10W ﾊﾞﾙﾌﾞ	2	[RRE/RW]
5	22192-42411		LENS,PLASTIC ﾚﾝｽﾞ	2	[RRE/RW]
6	534A9-92131		WIRE-HARNESS,LICENCE ﾜｲﾔﾊｰﾈｽ	1	[RRE/RW]
7	222A2-42511		WIRE,LEAD ﾜｲﾔ	2	[RRE/RW]
8	22256-42001		RIVET ﾘﾍﾞｯﾄ	4	[RRE/RW]
9	04913-11120		BAND ﾊﾞﾝﾄﾞ	4	[RRE/RW]
10	25596-42361		RIVET,NYLON ﾘﾍﾞｯﾄ	4	[RRE/RW]
11	25952-42311		WIRE,LEAD ﾜｲﾔ	2	[RRE/RW]
12	516G1-42211		WIRE,LEAD ﾜｲﾔ	1	[RRE/RW]

FIG.32 LICENSE LIGHT [TUE/RRE]

(F60324P0) ライセンスライト

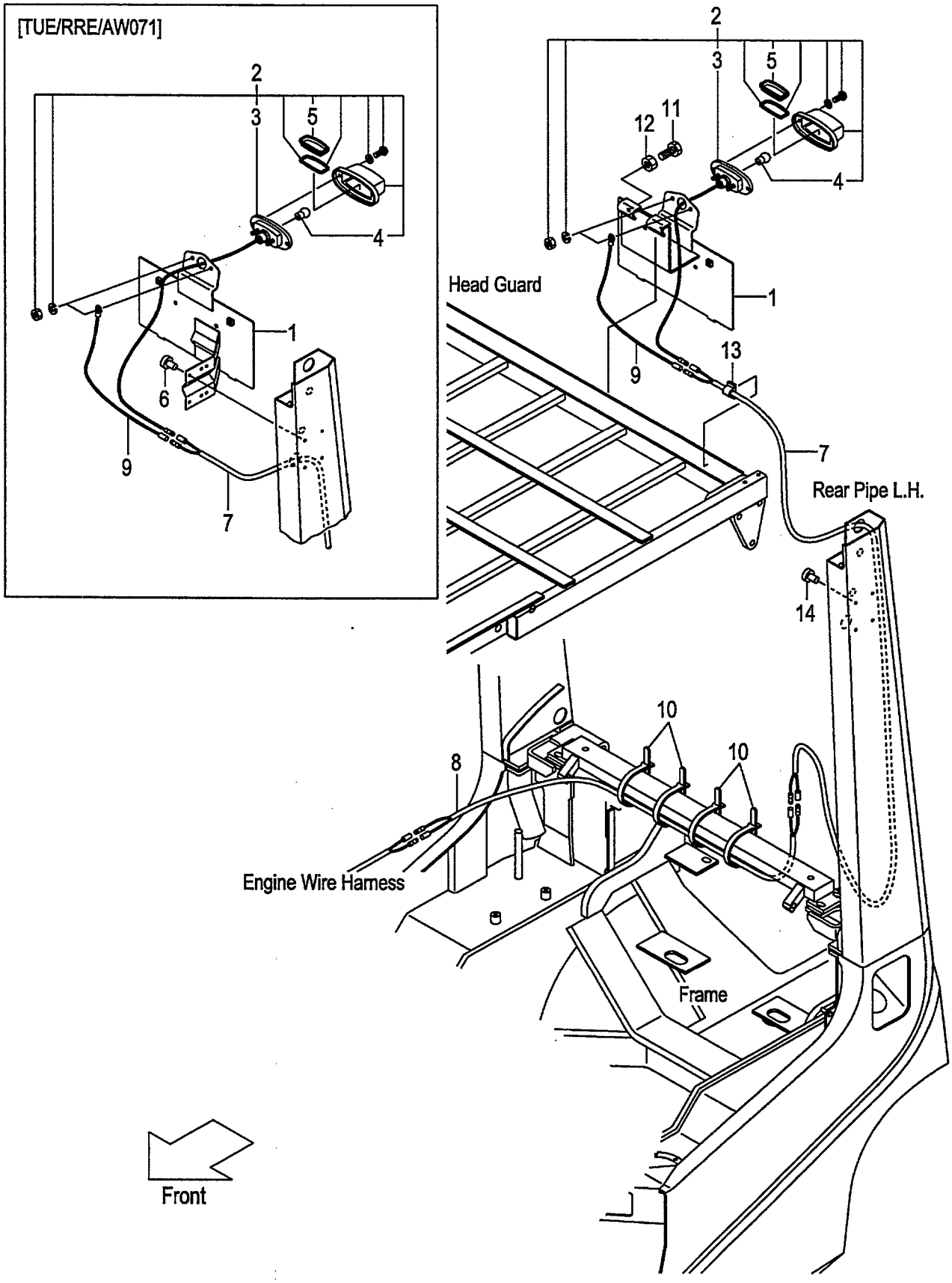

FIG.32
(F60324P0)

A:FD30C7 FD30T7 FD30W7

Item No	Part No.	Mark	Description	Req'd	Remarks : Serial No.
1	533A0-52051		BRACKET,NUMBER-PLATE ﾌﾞﾗｹｯﾄ	1	[TUE/RRE]
-	509P9-90101		BRACKET,NUMBER-PLATE ﾌﾞﾗｹｯﾄ	1	[TUE/RRE/AW071]
2	22132-40202		LAMP,LICENCE ﾗﾝﾌﾟ	1	[TUE/RRE] INC.3-5
3	NO PART NO.	#	BODY ﾎﾞﾃﾞｨ	1	[TUE/RRE]
4	22132-40041		BULB,12V/10W ﾊﾞﾙﾌﾞ	1	[TUE/RRE]
5	22192-42411		LENS,PLASTIC ﾚﾝｽﾞ	1	[TUE/RRE]
6	22256-42001		RIVET ﾘﾍﾞｯﾄ	4	[TUE/RRE/AW071]
7	534A9-92131		WIRE-HARNESS,LICENCE ﾜｲﾔﾊｰﾈｽ	1	[TUE/RRE]
-	516G9-92101		WIRE-HARNESS,LICENCE ﾜｲﾔﾊｰﾈｽ	1	[TUE/RRE/AW071]
8	558A9-92001		WIRE-HARNESS,LICENCE ﾜｲﾔﾊｰﾈｽ	1	[TUE/RRE]
9	222A2-42511		WIRE,LEAD ﾜｲﾔ	1	[TUE/RRE]
10	04913-11120		BAND ﾊﾞﾝﾄﾞ	4	[TUE/RRE]
11	01100-08020		BOLT ﾎﾞﾙﾄ	3	[TUE/RRE] (WITHOUT TUE/RRE/AW071)
12	01400-00008		NUT ﾅｯﾄ	3	[TUE/RRE] (WITHOUT TUE/RRE/AW071)
13	27732-42311		CLAMP,HARNESS ｸﾗﾝﾌﾟ	1	[TUE/RRE] (WITHOUT TUE/RRE/AW071)
14	25596-42361		RIVET,NYLON ﾘﾍﾞｯﾄ	4	[TUE/RRE] (WITHOUT TUE/RRE/AW071)

FIG.33 REAR WORKING LIGHT [RWLR]

(F60324Q0) リヤーワーキング゛ライト

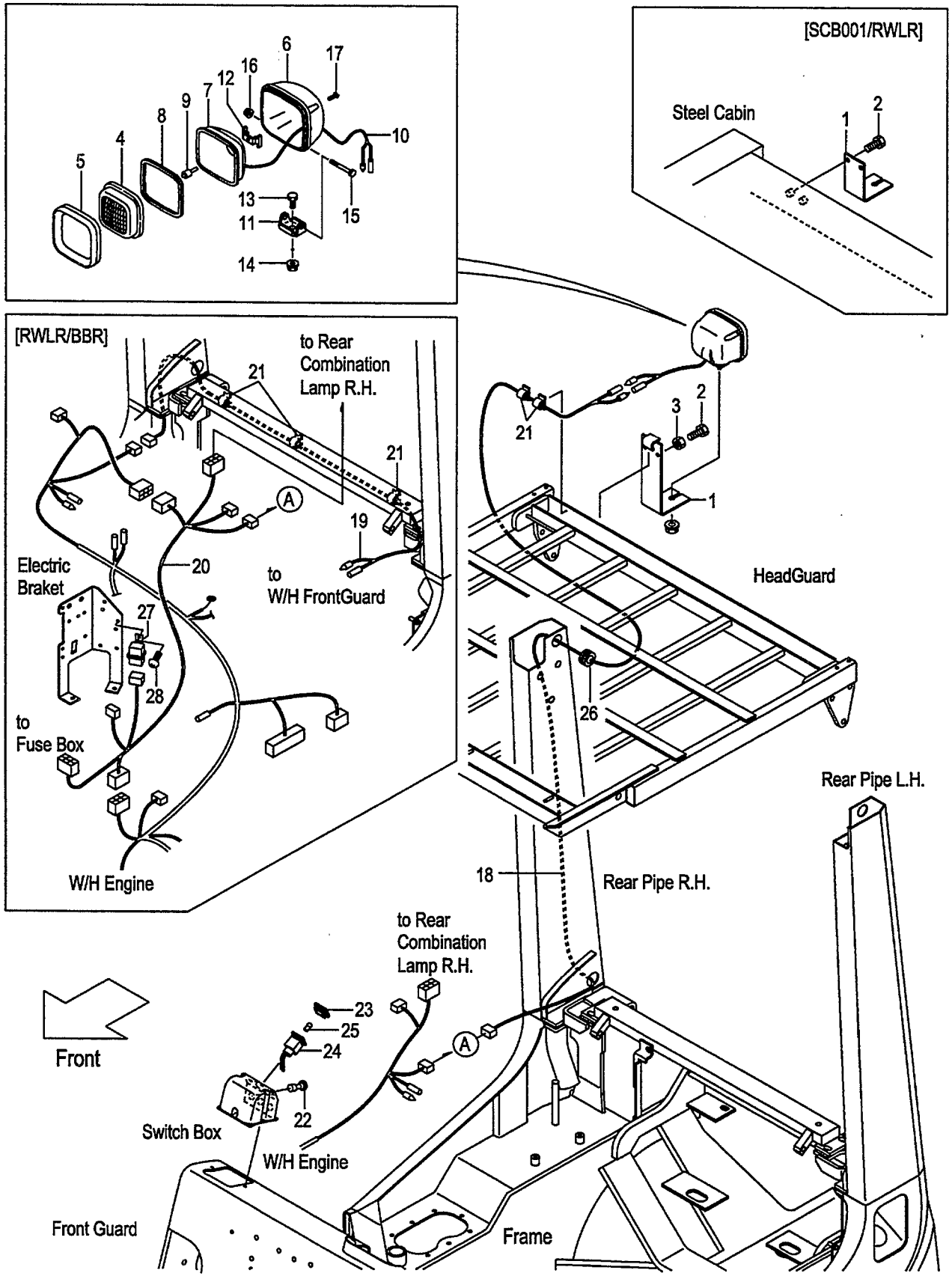

FIG.33
(F60324Q0)

A:FD30C7 FD30T7 FD30W7

Item No	Part No.	Mark	Description		Req'd	Remarks : Serial No.
1	516G1-42151		BRACKET,REAR-LAMP	ﾌﾞﾗｹｯﾄ	1	[RWLR]
-	539A1-42201		BRACKET,REAR-LAMP	ﾌﾞﾗｹｯﾄ	1	[RWLR/AW061]
-	530C1-42001		BRACKET,REAR-LAMP	ﾌﾞﾗｹｯﾄ	1	[SCB001/RWLR]
2	01100-08020		BOLT	ﾎﾞﾙﾄ	3	[RWLR]
-	01185-08020		BOLT	ﾎﾞﾙﾄ	2	[SCB001/RWLR]
3	01400-00008		NUT	ﾅｯﾄ	3	[RWLR](WITHOUT SCB001/RWLR)
A1	216G2-40602		LAMP-ASSY,HEAD	ﾍｯﾄﾞﾗﾝﾌﾟｱｯｾﾝ	1	[RWLR] INC.4-17
4	216G2-43502		LENS	ﾚﾝｽﾞ	1	[RWLR]
5	216G2-43631		RIM	ﾘﾑ	1	[RWLR]
6	NO PART NO.	#	HOUSING	ﾊｳｼﾞﾝｸﾞ	1	[RWLR]
7	NO PART NO.	#	REFLECTOR	ﾘﾌﾚｸﾀ	1	[RWLR]
8	216G2-43531		GASKET	ｶﾞｽｹｯﾄ	1	[RWLR]
9	216G2-43542		BULB,12V/55W	ﾊﾞﾙﾌﾞ	1	[RWLR]
10	216G2-43551		WIRE,LEAD	ﾜｲﾔ	1	[RWLR]
11	216G2-43562		BRACKET	ﾌﾞﾗｹｯﾄ	1	[RWLR]
12	216G2-43571		SPRING	ｽﾌﾟﾘﾝｸﾞ	1	[RWLR]
13	216G2-43582		BOLT	ﾎﾞﾙﾄ	1	[RWLR]
14	216G2-43592		NUT	ﾅｯﾄ	1	[RWLR]
15	216G2-43602		BOLT	ﾎﾞﾙﾄ	1	[RWLR]
16	216G2-43611		NUT	ﾅｯﾄ	1	[RWLR]
17	216G2-43622		SCREW	ｽｸﾘｭ	4	[RWLR]
18	516G1-42101		WIRE,LEAD	ﾜｲﾔ	1	[RWLR]
19	516G1-42111		WIRE,LEAD	ﾜｲﾔ	1	[RWLR/BBR]
20	539A8-92111		WIRE,LEAD	ﾜｲﾔ	1	[RWLR/BBR]
21	27732-42311		CLAMP,HARNESS	ｸﾗﾝﾌﾟ	2	[RWLR]
-	27732-42311		CLAMP,HARNESS	ｸﾗﾝﾌﾟ	5	[RWLR/BBR]
22	22672-42501		SWITCH,LAMP	ｽｲｯﾁ	1	[RWLR]
A2	522A1-42051		LAMP-ASSY,PILOT	ﾊﾟｲﾛｯﾄﾗﾝﾌﾟｱｯｾﾝ	1	[RWLR] INC.23-25
23	522A1-42061		LENS	ﾚﾝｽﾞ	1	[RWLR]
24	NO PART NO.	#	HOLDER	ﾎﾙﾀﾞ	1	[RWLR]
25	23302-42311		BULB,12V/3.4W	ﾊﾞﾙﾌﾞ	1	[RWLR]
26	22679-47301		GROMMET	ｸﾞﾛﾒｯﾄ	1	[RWLR]
27	26062-42881		RELAY,12V	ﾘﾚｰ	1	[RWLR/BBR]
28	214A2-42611		SCREW	ｽｸﾘｭ	1	[RWLR/BBR]

FIG.34 REAR WORKING LIGHT [RWLL]

(F60324R0) リヤーワーキング゛ライト

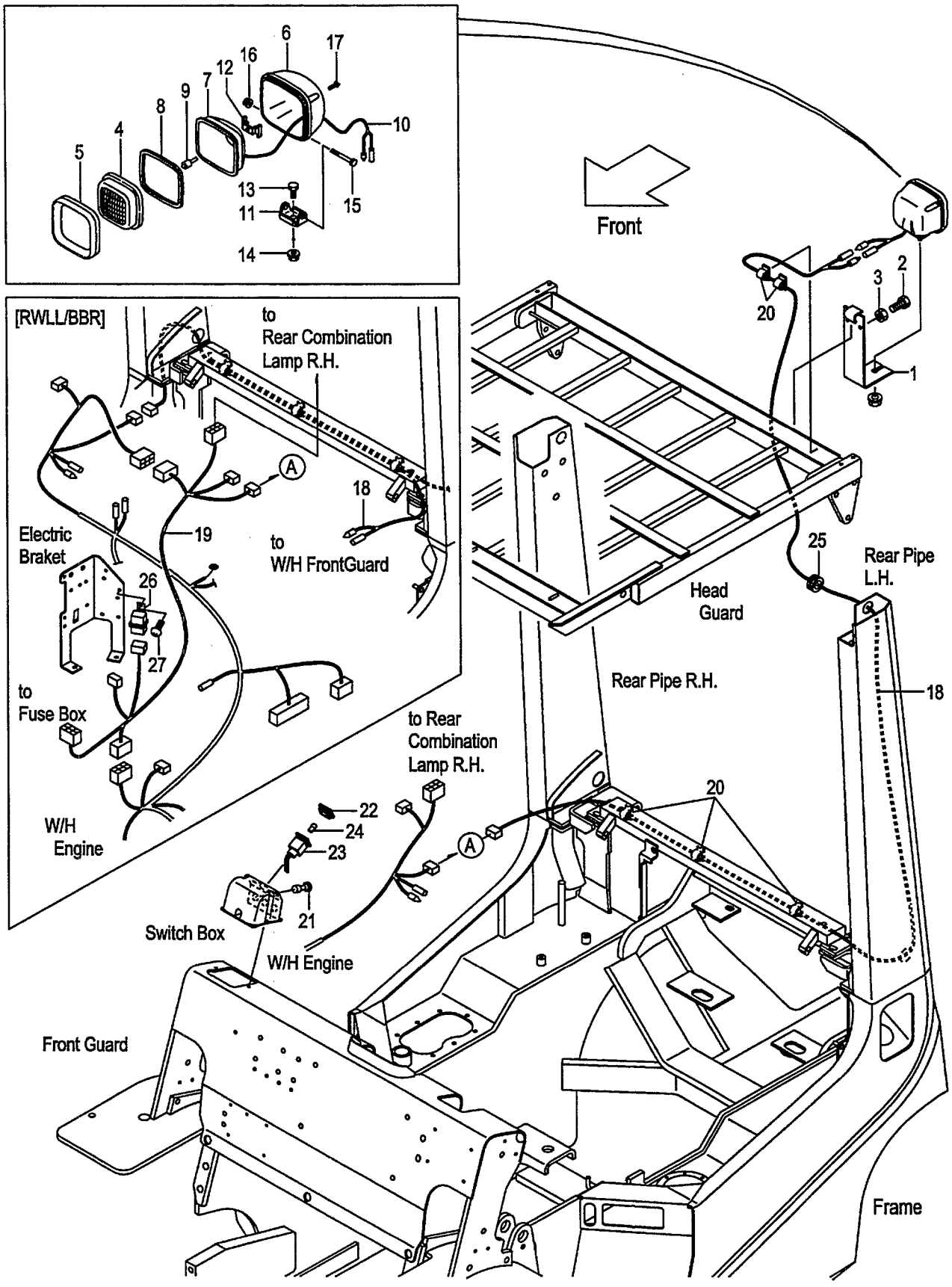

FIG.34
(F60324R0)

A:FD30C7 FD30T7 FD30W7

Item No	Part No.	Mark	Description		Req'd	Remarks : Serial No.
1	516G1-42151		BRACKET,REAR-LAMP	ﾌﾞﾗｹｯﾄ	1	[RWLL]
-	539A1-42201		BRACKET,REAR-LAMP	ﾌﾞﾗｹｯﾄ	1	[RWLL/AW061]
2	01100-08020		BOLT	ﾎﾞﾙﾄ	3	[RWLL]
3	01400-00008		NUT	ﾅｯﾄ	3	[RWLL]
A1	216G2-40602		LAMP-ASSY,HEAD	ﾍｯﾄﾞﾗﾝﾌﾟｱｯｾﾝ	1	[RWLL] INC.4-17
4	216G2-43502		LENS	ﾚﾝｽﾞ	1	[RWLL]
5	216G2-43631		RIM	ﾘﾑ	1	[RWLL]
6	NO PART NO.	#	HOUSING	ﾊｳｼﾞﾝｸﾞ	1	[RWLL]
7	NO PART NO.	#	REFLECTOR	ﾘﾌﾚｸﾀ	1	[RWLL]
8	216G2-43531		GASKET	ｶﾞｽｹｯﾄ	1	[RWLL]
9	216G2-43542		BULB,12V/55W	ﾊﾞﾙﾌﾞ	1	[RWLL]
10	216G2-43551		WIRE,LEAD	ﾜｲﾔ	1	[RWLL]
11	216G2-43562		BRACKET	ﾌﾞﾗｹｯﾄ	1	[RWLL]
12	216G2-43571		SPRING	ｽﾌﾟﾘﾝｸﾞ	1	[RWLL]
13	216G2-43582		BOLT	ﾎﾞﾙﾄ	1	[RWLL]
14	216G2-43592		NUT	ﾅｯﾄ	1	[RWLL]
15	216G2-43602		BOLT	ﾎﾞﾙﾄ	1	[RWLL]
16	216G2-43611		NUT	ﾅｯﾄ	1	[RWLL]
17	216G2-43622		SCREW	ｽｸﾘｭ	4	[RWLL]
18	516G1-42111		WIRE,LEAD	ﾜｲﾔ	1	[RWLL]
-	516G1-42111		WIRE,LEAD	ﾜｲﾔ	2	[RWLL/BBR]
19	539A8-92111		WIRE,LEAD	ﾜｲﾔ	1	[RWLL/BBR]
20	27732-42311		CLAMP,HARNESS	ｸﾗﾝﾌﾟ	5	[RWLL]
21	22672-42501		SWITCH,LAMP	ｽｲｯﾁ	1	[RWLL]
A2	522A1-42051		LAMP-ASSY,PILOT	ﾊﾟｲﾛｯﾄﾗﾝﾌﾟｱｯｾﾝ	1	[RWLL] INC.22-24
22	522A1-42061		LENS	ﾚﾝｽﾞ	1	[RWLL]
23	NO PART NO.	#	HOLDER	ﾎﾙﾀﾞ	1	[RWLL]
24	23302-42311		BULB,12V/3.4W	ﾊﾞﾙﾌﾞ	1	[RWLL]
25	22679-47301		GROMMET	ｸﾞﾛﾒｯﾄ	1	[RWLL]
26	26062-42881		RELAY,12V	ﾘﾚｰ	1	[RWLL/BBR]
27	214A2-42611		SCREW	ｽｸﾘｭ	1	[RWLL/BBR]

FIG.35 REAR WORKING LIGHT [RWL2]

(F60324S0) リヤーワーキング゛ライト

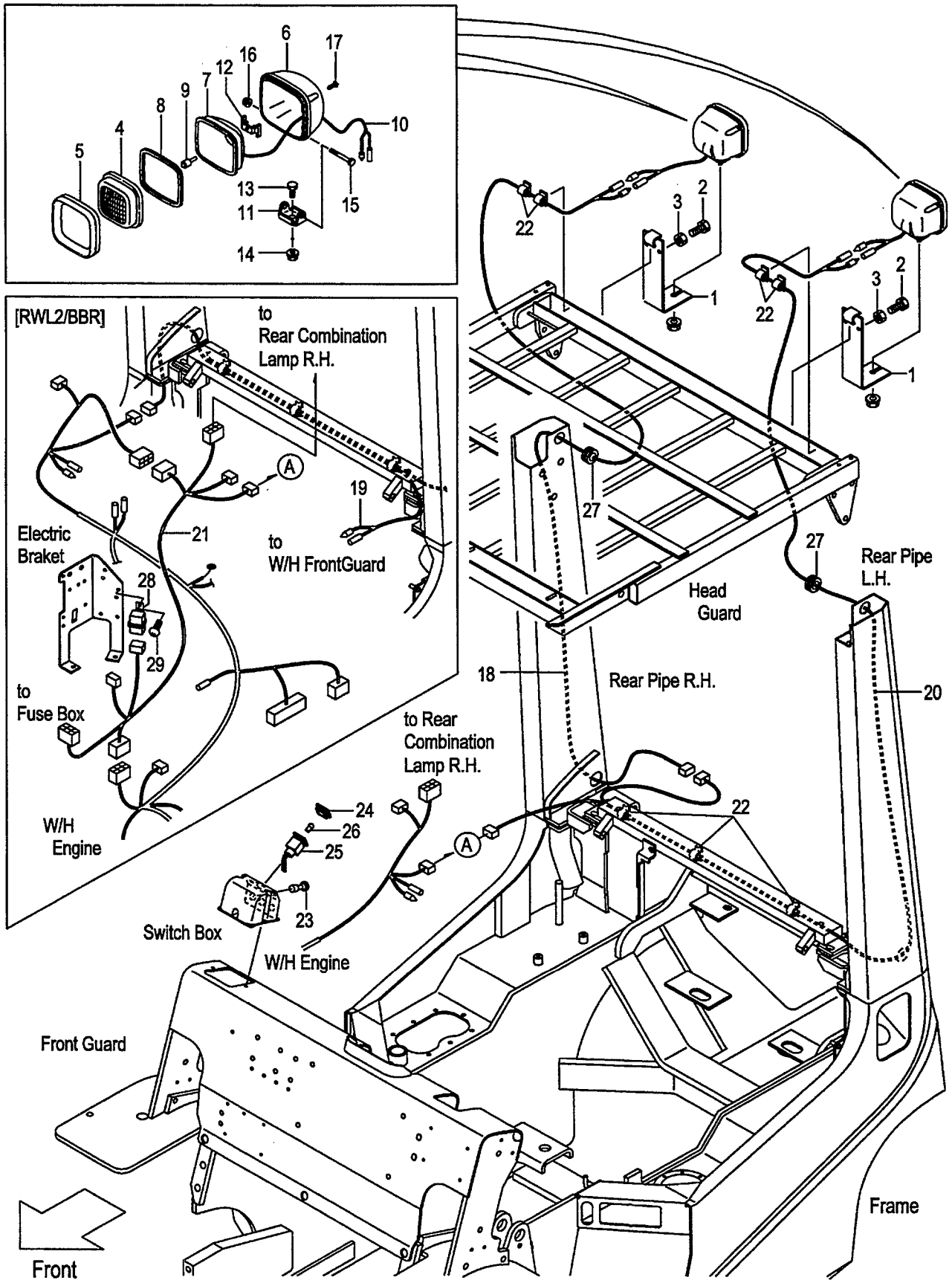

A:FD30C7 FD30T7 FD30W7

Item No	Part No.	Mark	Description		Req'd	Remarks : Serial No.
1	516G1-42151		BRACKET,REAR-LAMP	ﾌﾞﾗｹｯﾄ	2	[RWL2]
-	539A1-42201		BRACKET,REAR-LAMP	ﾌﾞﾗｹｯﾄ	2	[RWL2/AW061]
2	01100-08020		BOLT	ﾎﾞﾙﾄ	6	[RWL2]
3	01400-00008		NUT	ﾅｯﾄ	6	[RWL2]
A1	216G2-40602		LAMP-ASSY,HEAD	ﾍｯﾄﾞﾗﾝﾌﾟｱｯｾﾝ	2	[RWL2] INC.4-17
4	216G2-43502		LENS	ﾚﾝｽﾞ	2	[RWL2]
5	216G2-43631		RIM	ﾘﾑ	2	[RWL2]
6	NO PART NO.	#	HOUSING	ﾊｳｼﾞﾝｸﾞ	2	[RWL2]
7	NO PART NO.	#	REFLECTOR	ﾘﾌﾚｸﾀ	2	[RWL2]
8	216G2-43531		GASKET	ｶﾞｽｹｯﾄ	2	[RWL2]
9	216G2-43542		BULB,12V/55W	ﾊﾞﾙﾌﾞ	2	[RWL2]
10	216G2-43551		WIRE,LEAD	ﾜｲﾔ	2	[RWL2]
11	216G2-43562		BRACKET	ﾌﾞﾗｹｯﾄ	2	[RWL2]
12	216G2-43571		SPRING	ｽﾌﾟﾘﾝｸﾞ	2	[RWL2]
13	216G2-43582		BOLT	ﾎﾞﾙﾄ	2	[RWL2]
14	216G2-43592		NUT	ﾅｯﾄ	2	[RWL2]
15	216G2-43602		BOLT	ﾎﾞﾙﾄ	2	[RWL2]
16	216G2-43611		NUT	ﾅｯﾄ	2	[RWL2]
17	216G2-43622		SCREW	ｽｸﾘｭ	8	[RWL2]
18	516G1-42101		WIRE,LEAD	ﾜｲﾔ	1	[RWL2]
19	516G1-42111		WIRE,LEAD	ﾜｲﾔ	1	[RWL2/BBR]
20	516G1-42121		WIRE,LEAD	ﾜｲﾔ	1	[RWL2]
21	539A8-92111		WIRE,LEAD	ﾜｲﾔ	1	[RWL2/BBR]
22	27732-42311		CLAMP,HARNESS	ｸﾗﾝﾌﾟ	7	[RWL2]
23	22672-42501		SWITCH,LAMP	ｽｲｯﾁ	1	[RWL2]
A2	522A1-42051		LAMP-ASSY,PILOT	ﾊﾟｲﾛｯﾄﾗﾝﾌﾟｱｯｾﾝ	1	[RWL2] INC.24-26
24	522A1-42061		LENS	ﾚﾝｽﾞ	1	[RWL2]
25	NO PART NO.	#	HOLDER	ﾎﾙﾀﾞ	1	[RWL2]
26	23302-42311		BULB,12V/3.4W	ﾊﾞﾙﾌﾞ	1	[RWL2]
27	22679-47301		GROMMET	ｸﾞﾛﾒｯﾄ	2	[RWL2]
28	26062-42881		RELAY,12V	ﾘﾚｰ	1	[RWL2/BBR]
29	214A2-42611		SCREW	ｽｸﾘｭ	1	[RWL2/BBR]

FIG.36 REVOLVING LIGHT [RLY][RLR]

(F60324T0) ﾘﾎﾞﾙﾋﾞﾝｸﾞﾗｲﾄ

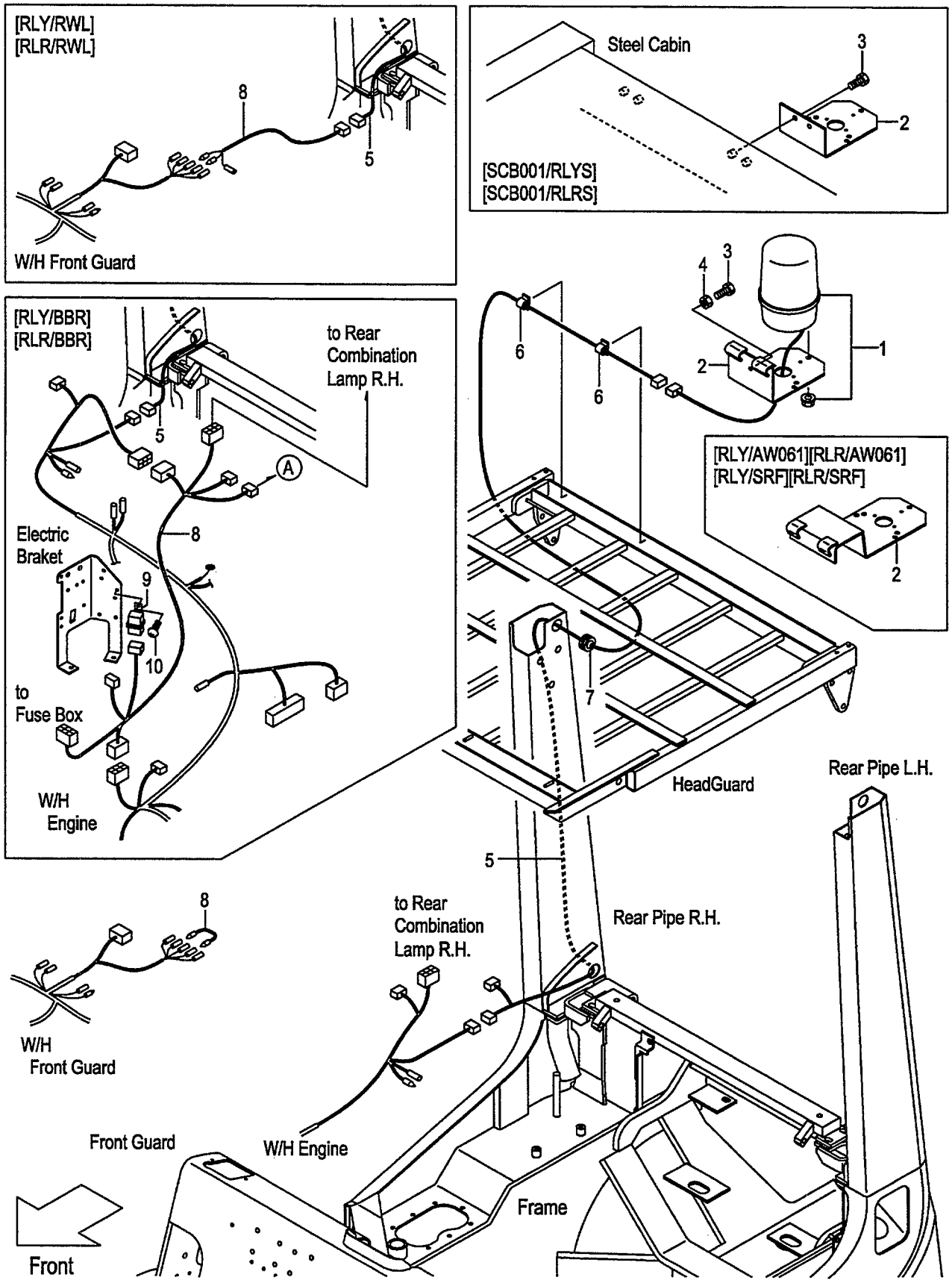

FIG.36
(F60324T0)

A:FD30C7 FD30T7 FD30W7

Item No	Part No.	Mark	Description		Req'd	Remarks : Serial No.
1	514A1-41001		LIGHT,REVOLVING	ﾗｲﾄ	1	[RLYS]
-	514A1-41011		LIGHT,REVOLVING	ﾗｲﾄ	1	[RLRS]
-	514A1-41021		LIGHT,REVOLVING	ﾗｲﾄ	1	[RLYM]
-	514A1-41031		LIGHT,REVOLVING	ﾗｲﾄ	1	[RLRM]
2	529F1-42251		BRACKET,REVOLVING	ﾌﾞﾗｹｯﾄ	1	[RLY][RLR]
-	529F1-42201		BRACKET,REVOLVING	ﾌﾞﾗｹｯﾄ	1	[RLY/BKTL][RLR/BKTL]
-	539A8-92251		BRACKET,REVOLVING	ﾌﾞﾗｹｯﾄ	1	[RLY/AW061][RLR/AW061] [RLY/SRF][RLR/SRF]
-	535C8-92051		BRACKET,REVOLVING	ﾌﾞﾗｹｯﾄ	1	[SCB001/RLYS][SCB001/RLRS]
3	01100-08020		BOLT	ﾎﾞﾙﾄ	3	[RLY][RLR]
-	01185-08020		BOLT	ﾎﾞﾙﾄ	2	[SCB001/RLYS][SCB001/RLRS]
4	01400-00008		NUT	ﾅｯﾄ	3	[RLY][RLR] (WITHOUT SCB001/RLYS, SCB001/RLRS)
5	516G8-92001		WIRE,LEAD	ﾜｲﾔ	1	[RLY][RLR]
-	514A1-42191		WIRE,LEAD	ﾜｲﾔ	1	[RLY/BBR][RLR/BBR][RLY/RWL] [RLR/RWL]
6	27732-42311		CLAMP,HARNESS	ｸﾗﾝﾌﾟ	2	[RLY][RLR]
7	22679-47301		GROMMET	ｸﾞﾛﾒｯﾄ	1	[RLY][RLR]
8	516G1-42211		WIRE,LEAD	ﾜｲﾔ	1	[RLY][RLR]
-	539A8-92111		WIRE,LEAD	ﾜｲﾔ	1	[RLY/BBR][RLR/BBR]
-	514A1-42041		WIRE,LEAD	ﾜｲﾔ	1	[RLY/RWL][RLR/RWL]
9	26062-42881		RELAY,12V	ﾘﾚｰ	1	[RLY/BBR][RLR/BBR]
10	214A2-42611		SCREW	ｽｸﾘｭ	1	[RLY/BBR][RLR/BBR]

FIG.37 SPOT LIGHT [SPL]

(F6032610) スポットライト

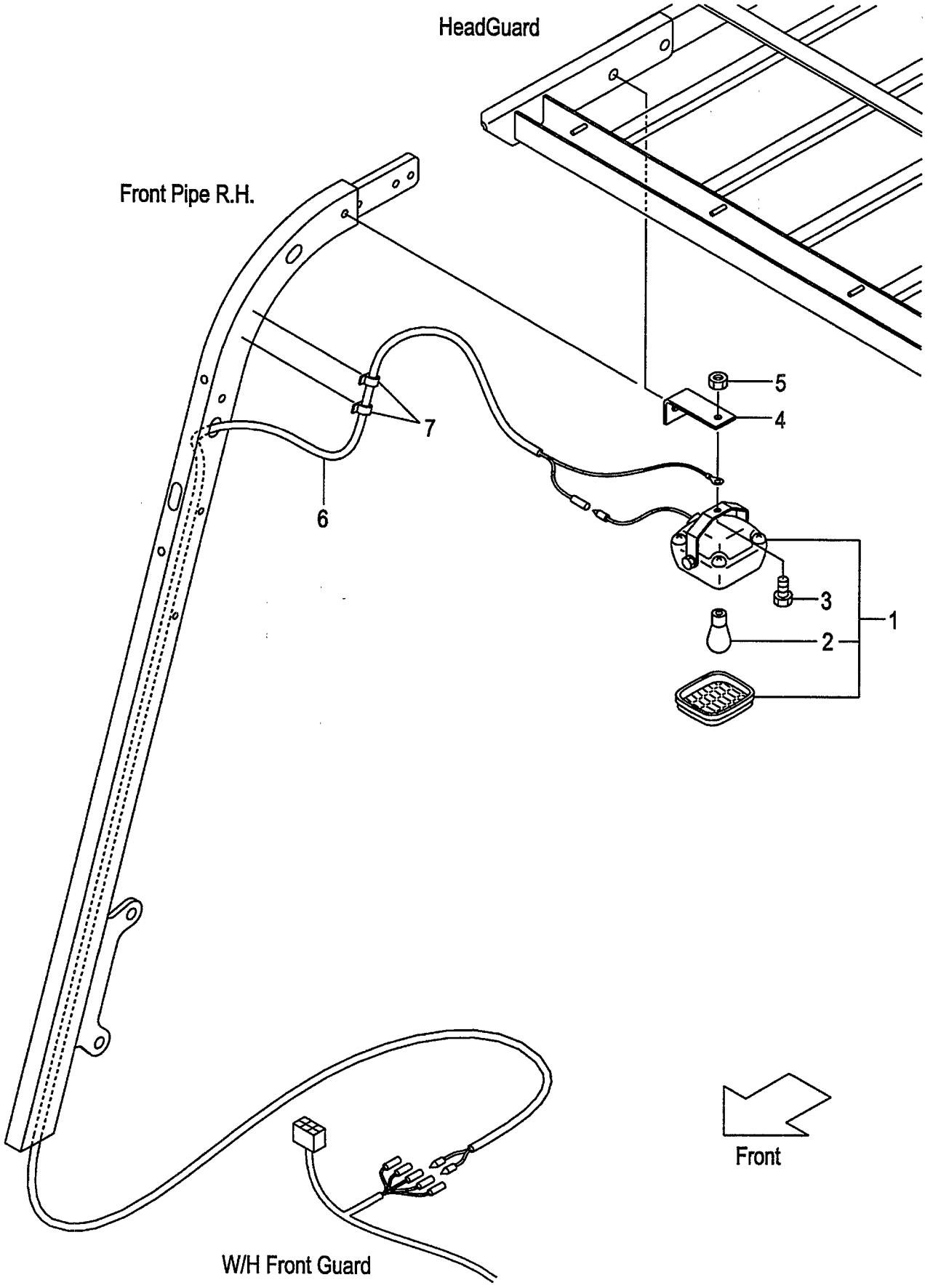

FIG.37
(F6032610)

A:FD30C7 FD30T7 FD30W7

Item No	Part No.	Mark	Description		Req'd	Remarks : Serial No.
1	516G9-10101		LAMP	ﾗﾝﾌﾟ	1	[SPL] INC.2
2	516G9-12011		BULB,12V/18.2W	ﾊﾞﾙﾌﾞ	1	[SPL]
3	01185-08016		BOLT	ﾎﾞﾙﾄ	1	[SPL]
4	539A9-02001		BRACKET,SPOT-LAMP	ﾌﾞﾗｹｯﾄ	1	[SPL]
5	01400-00008		NUT	ﾅｯﾄ	1	[SPL]
6	539A9-02011		WIRE-HARNESS,SPOT-LIGHT	ﾜｲﾔﾊｰﾈｽ	1	[SPL]
7	27732-42311		CLAMP,HARNESS	ｸﾗﾝﾌﾟ	2	[SPL]

FIG.38 HEATER UNIT [HR]

(F60324U0) ヒータユニット

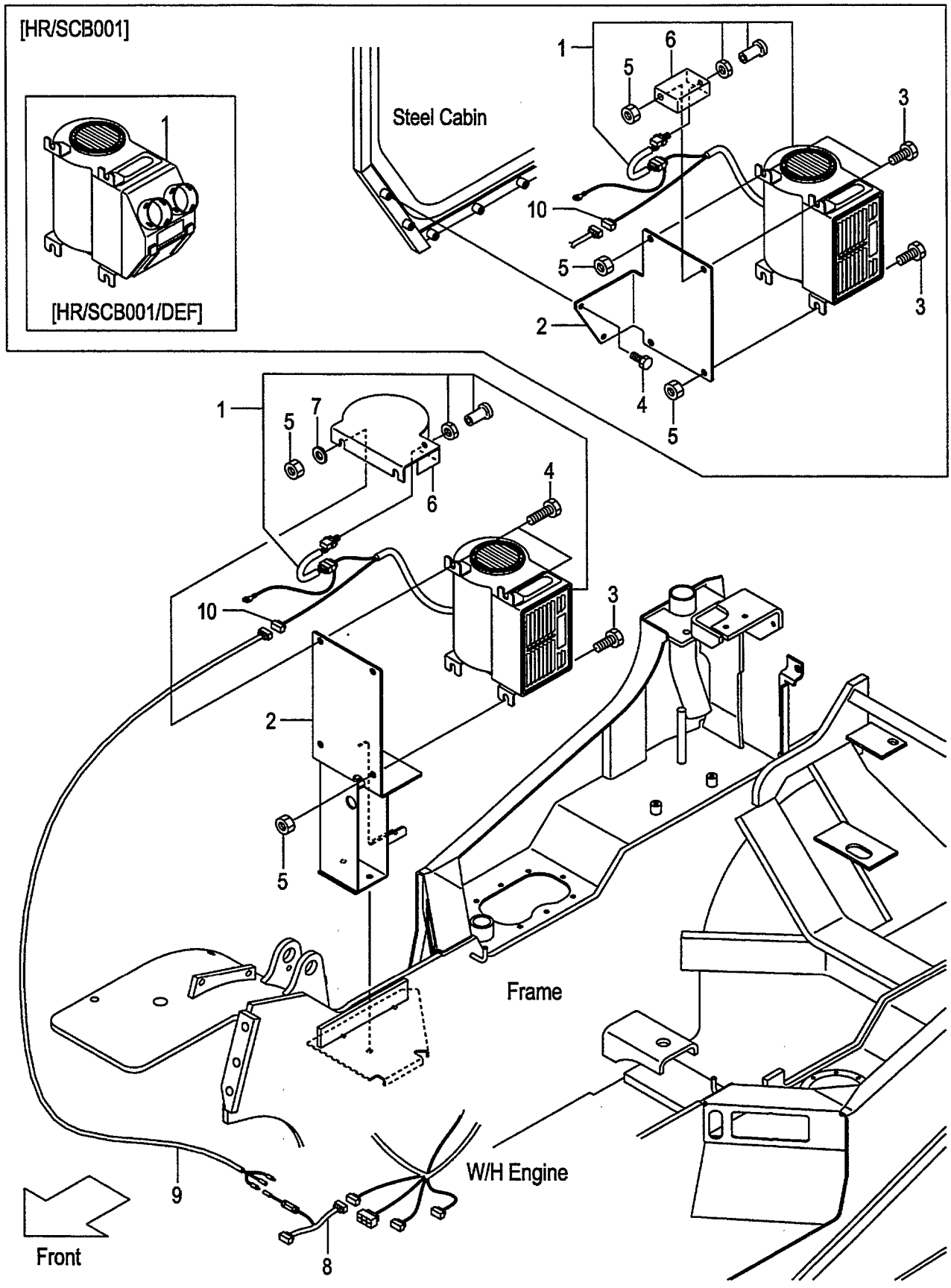

FIG.38
(F60324U0)

A:FD30C7 FD30T7 FD30W7

Item No	Part No.	Mark	Description		Req'd	Remarks : Serial No.
1	514T7-20201		HEATER,CAR	ヒータ	1	[HR]
-	556C7-22001		HEATER,CAR	ヒータ	1	[HR/SCB001/DEF]
2	539A7-22513		BRACKET,HEATER	ブラケット	1	[HR]
-	539A7-22211		BRACKET,HEATER	ブラケット	1	[HR/SCB001]
3	01186-10020		BOLT	ボルト	2	[HR]
-	01186-10020		BOLT	ボルト	4	[HR/SCB001]
4	01186-10025		BOLT	ボルト	2	[HR]
-	01186-08020		BOLT	ボルト	2	[HR/SCB001]
5	01400-00010		NUT	ナット	4	[HR]
6	539A7-22611		PLATE,TOP,HR	プレート	1	[HR]
-	539A7-22061		BRACKET,HEATER-SW.	ブラケット	1	[HR/SCB001]
7	02000-00010		WASHER	ワッシャ	2	[HR](WITHOUT HR/SCB001)
8	514T7-22061		WIRE,LEAD	ワイヤ	1	[HR]
9	514A1-42041		WIRE,LEAD	ワイヤ	1	[HR]
10	534A7-22101		CONNECTOR,MALE	コネクタ	1	[HR]
11	27042-43501	+	TERMINAL	ターミナル	2	[HR]

FIG.39 HEATER VALVE & ELBOW [HR]

(F60324Y0) ﾋｰﾀﾊﾞﾙﾌﾞ&ｴﾙﾎﾞ

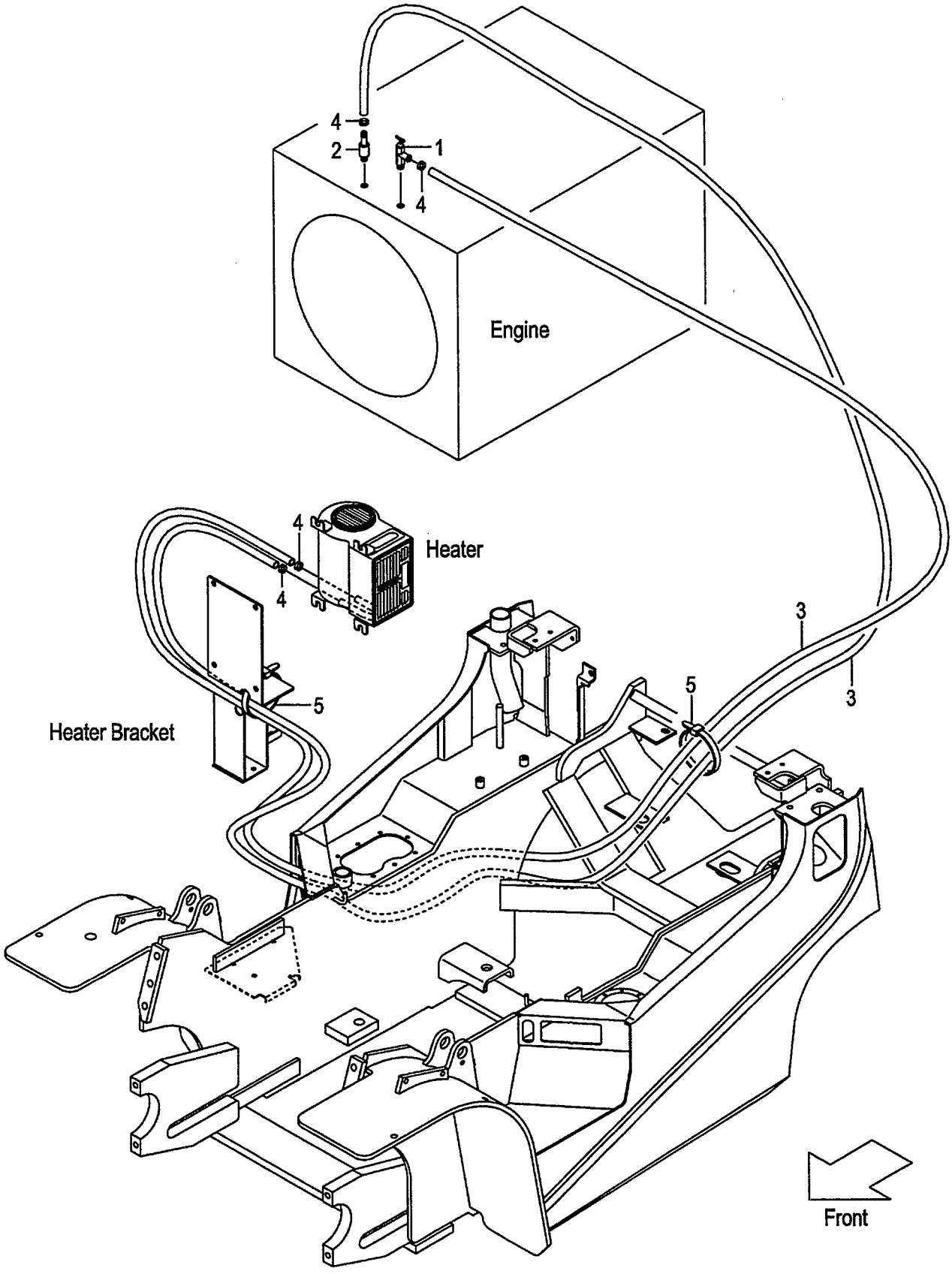

FIG.39
(F60324Y0)

A:FD30C7 FD30T7 FD30W7

Item No	Part No.	Mark	Description		Req'd	Remarks : Serial No.
1	56110-63521		VALVE,WATER	ﾊﾞﾙﾌﾞ	1	[HR]
2	529F7-22001		NIPPLE	ﾆｯﾌﾟﾙ	1	[HR]
3	522A7-22011		HOSE,WATER	ﾎｰｽ	2	[HR]
4	04911-00022		CLIP	ｸﾘｯﾌﾟ	4	[HR]
5	04913-11200		BAND	ﾊﾞﾝﾄﾞ	10	[HR]

FIG.40 FAN [FAN]

(F6032620) ファン

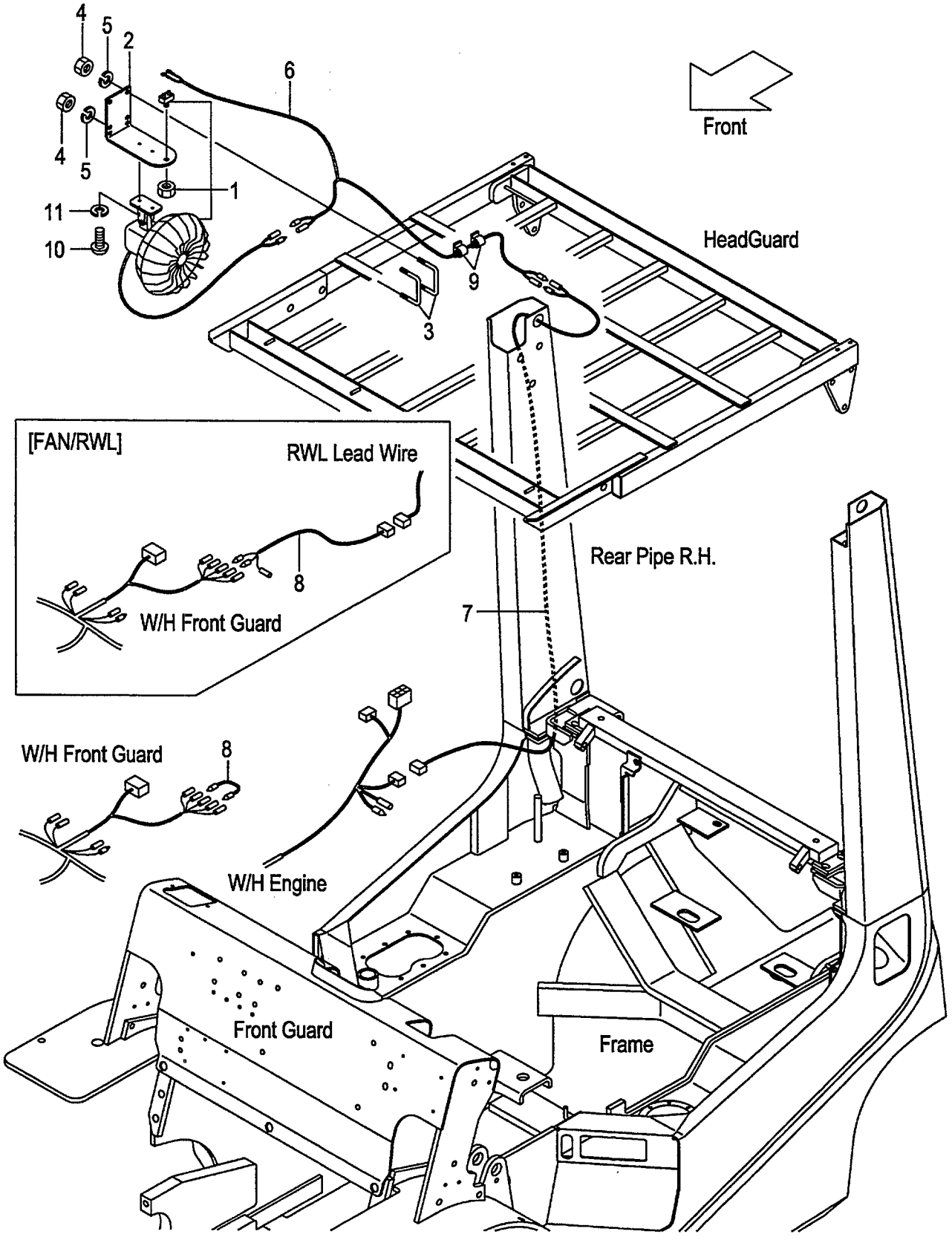

FIG.40
(F6032620)

A:FD30C7 FD30T7 FD30W7

Item No	Part No.	Mark	Description		Req'd	Remarks : Serial No.
1	514A5-32341		FAN,CAR	ﾌｧﾝ	1	[FAN]
-	514A5-32341		FAN,CAR	ﾌｧﾝ	1	[FAN/SCB001]
2	539A8-22101		BRACKET,FAN	ﾌﾞﾗｹｯﾄ	1	[FAN](WITHOUT FAN/SCB001)
3	55812-42011		U-BOLT	Uﾎﾞﾙﾄ	2	[FAN](WITHOUT FAN/SCB001)
4	01400-00008		NUT	ﾅｯﾄ	4	[FAN](WITHOUT FAN/SCB001)
5	02010-00008		WASHER	ﾜｯｼｬ	4	[FAN](WITHOUT FAN/SCB001)
6	539A8-22151		WIRE-HARNESS,FAN	ﾜｲﾔﾊｰﾈｽ	1	[FAN](WITHOUT FAN/SCB001)
7	516G1-42101		WIRE,LEAD	ﾜｲﾔ	1	[FAN](WITHOUT FAN/SCB001)
8	516G1-42211		WIRE,LEAD	ﾜｲﾔ	1	[FAN](WITHOUT FAN/SCB001)
-	514A1-42041		WIRE,LEAD	ﾜｲﾔ	1	[FAN/RWL]
9	27732-42311		CLAMP,HARNESS	ｸﾗﾝﾌﾟ	4	[FAN](WITHOUT FAN/SCB001)
10	01030-04014		SCREW	ｽｸﾘｭ	2	[FAN]
-	01044-04014		SCREW	ｽｸﾘｭ	2	[FAN/SCB001]
11	02010-00004		WASHER	ﾜｯｼｬ	2	[FAN](WITHOUT FAN/SCB001)
12	229F6-42201	+	SEAL,PANEL-COVER,A	ｼｰﾙ	3	[FAN/SCB001]
13	229F6-42211	+	SEAL,PANEL-COVER,B	ｼｰﾙ	2	[FAN/SCB001]
14	534A5-33001	+	GROMMET	ｸﾞﾛﾒｯﾄ	2	[FAN/SCB001]

FIG.41 AMMETER [AM]

(F6032630) アンメータ

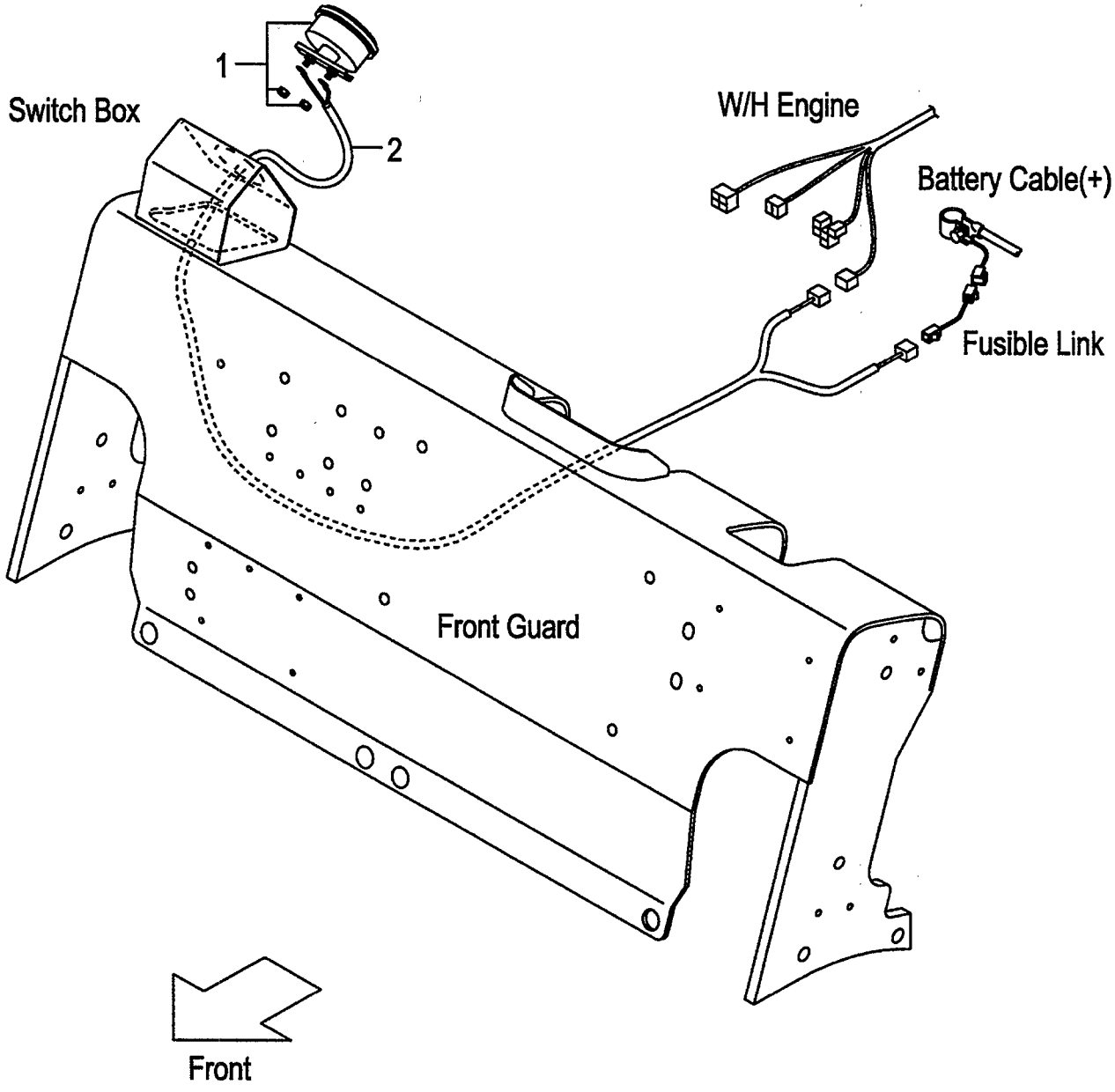

FIG.41
(F6032630)

A:FD30C7 FD30T7 FD30W7

Item No	Part No.	Mark	Description	Req'd	Remarks : Serial No.
1	3956323		AMMETER,50A アンメータ	1	[AM]
2	516G6-12051		WIRE,LEAD,AMMETER ワイヤ	1	[AM]

FIG.42 SPEED METER [SM]

(F6032640) ｽﾋﾟｰﾄﾞﾒｰﾀ

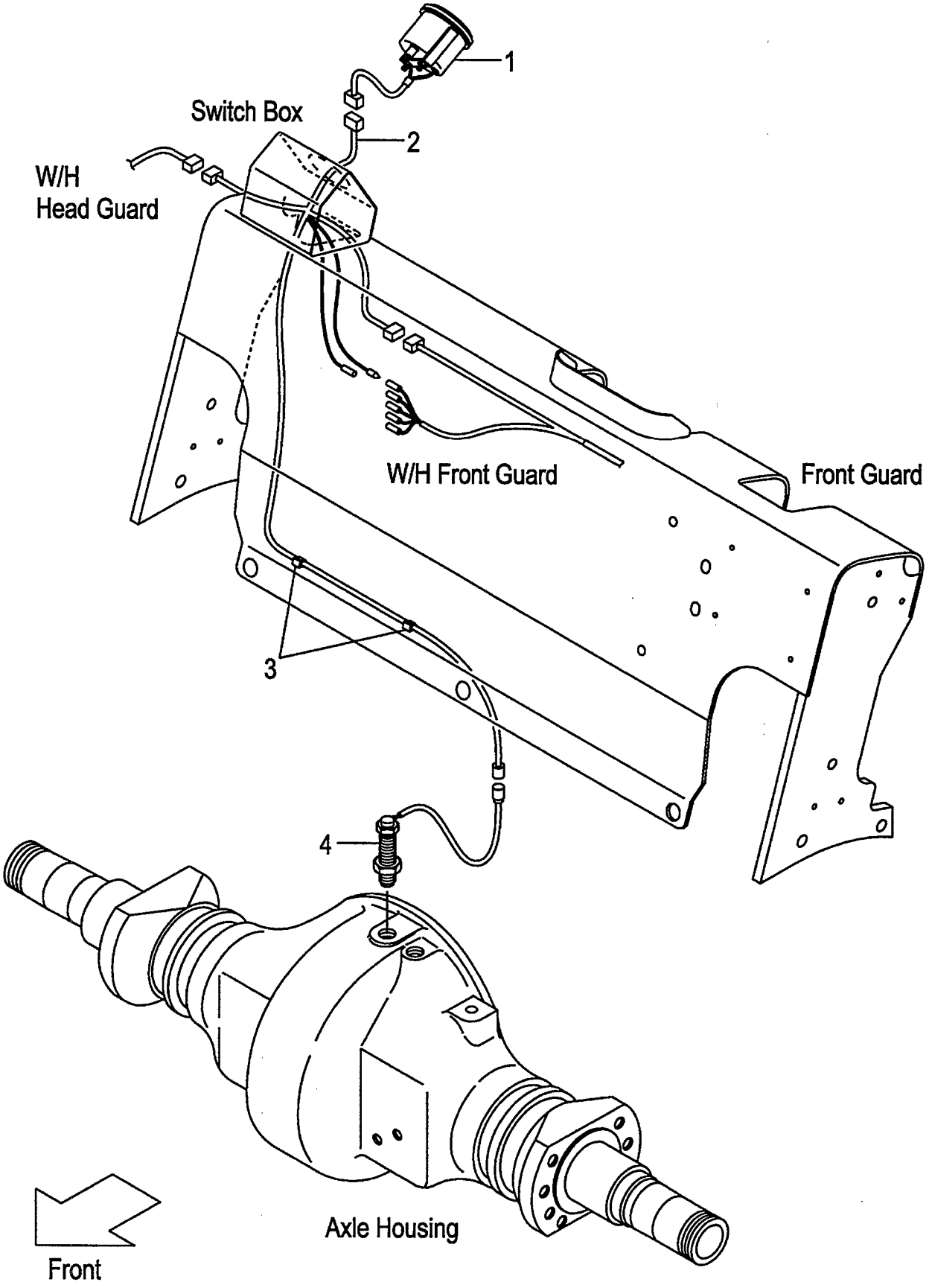

FIG.42
(F6032640)

A:FD30C7 FD30T7 FD30W7

Item No	Part No.	Mark	Description		Req'd	Remarks : Serial No.
1	534A7-50101		METER,SPEED	ﾒｰﾀ	1	[SM]
2	516G7-50301		WIRE-HARNESS,SM	ﾜｲﾔﾊｰﾈｽ	1	[SM]
3	27732-42311		CLAMP,HARNESS	ｸﾗﾝﾌﾟ	2	[SM]
4	16402-54331		SENSOR	ｾﾝｻ	1	[SM]

FIG.43 TORQUE CONVERTER THERMOMETER [TTM]

(F6032650) トルクコンバータサーモメータ

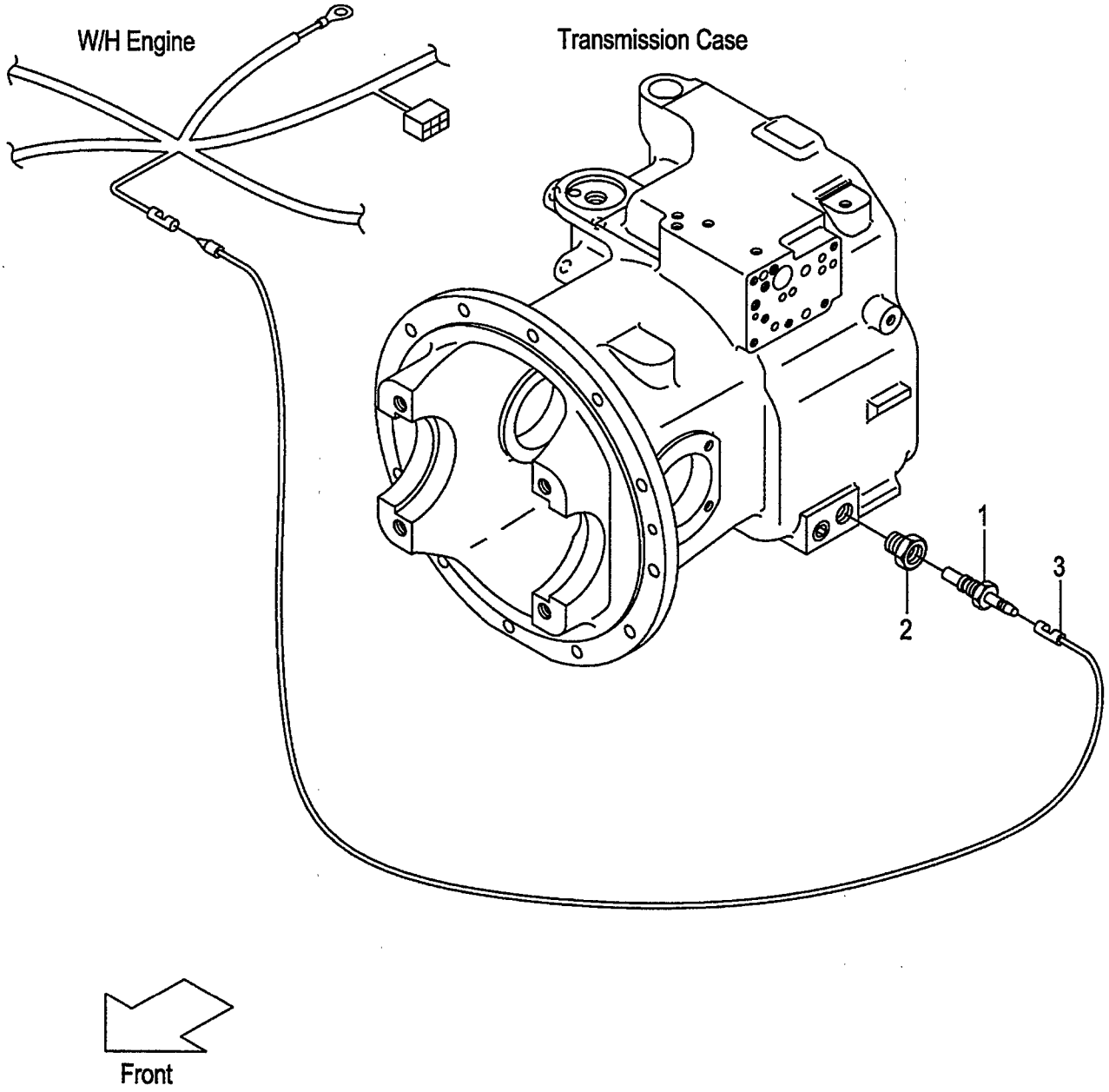

FIG.43
(F6032650)

A:FD30T7

Item No	Part No.	Mark	Description	Req'd	Remarks : Serial No.
1	23652-44001		UNIT,SENDING ﾕﾆｯﾄ	1	[TTM]
2	521A2-42061		ADAPTER,THERMO-SW. ｱﾀﾞﾌﾟﾀ	1	[TTM]
3	214A2-42371		WIRE,LEAD ﾜｲﾔ	1	[TTM]

FIG.44 TORQUE CONVERTER PRESSURE METER [TPM]

(F6032660) トルクコンバータプレッシャメータ

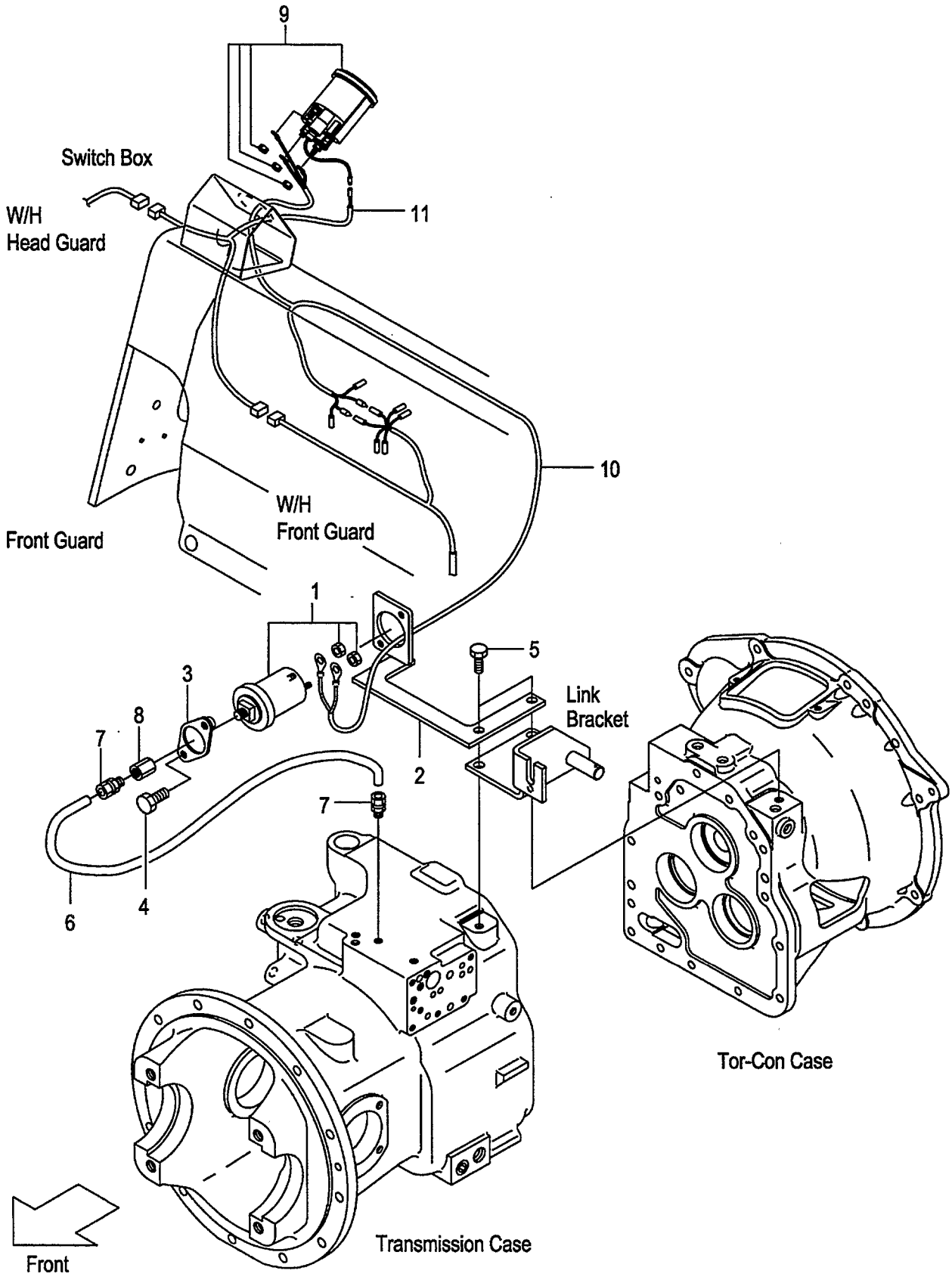

FIG.44
(F6032660)

A:FD30T7

Item No	Part No.	Mark	Description		Req'd	Remarks : Serial No.
1	516G6-92001		SENSOR,PRESS.GAUGE	ｾﾝｻ	1	[TPM]
2	539B6-92111		BRACKET,SENSOR	ﾌﾞﾗｹｯﾄ	1	[TPM]
3	516G6-92151		COVER,SENSOR	ｶﾊﾞｰ	1	[TPM]
4	01186-08025		BOLT	ﾎﾞﾙﾄ	2	[TPM]
5	01184-10025		BOLT	ﾎﾞﾙﾄ	2	[TPM]
6	539B6-92211		PIPE,CAPPER	ﾊﾟｲﾌﾟ	1	[TPM]
7	516G6-92011		JOINT	ｼﾞｮｲﾝﾄ	2	[TPM]
8	516G6-92031		ADAPTER	ｱﾀﾞﾌﾟﾀ	1	[TPM]
9	516G6-92022		GAUGE,PRESSURE	ｹﾞｰｼﾞ	1	[TPM]
10	516G6-92201		WIRE-HARNESS,TPM	ﾜｲﾔﾊｰﾈｽ	1	[TPM]
11	516G6-92211		WIRE-HARNESS,TPM	ﾜｲﾔﾊｰﾈｽ	1	[TPM]

FIG.45 SPEED DETECTOR UNIT [SAS]

(F6032670) ｽﾋﾟｰﾄﾞﾃﾞｨﾃｸﾀﾕﾆｯﾄ

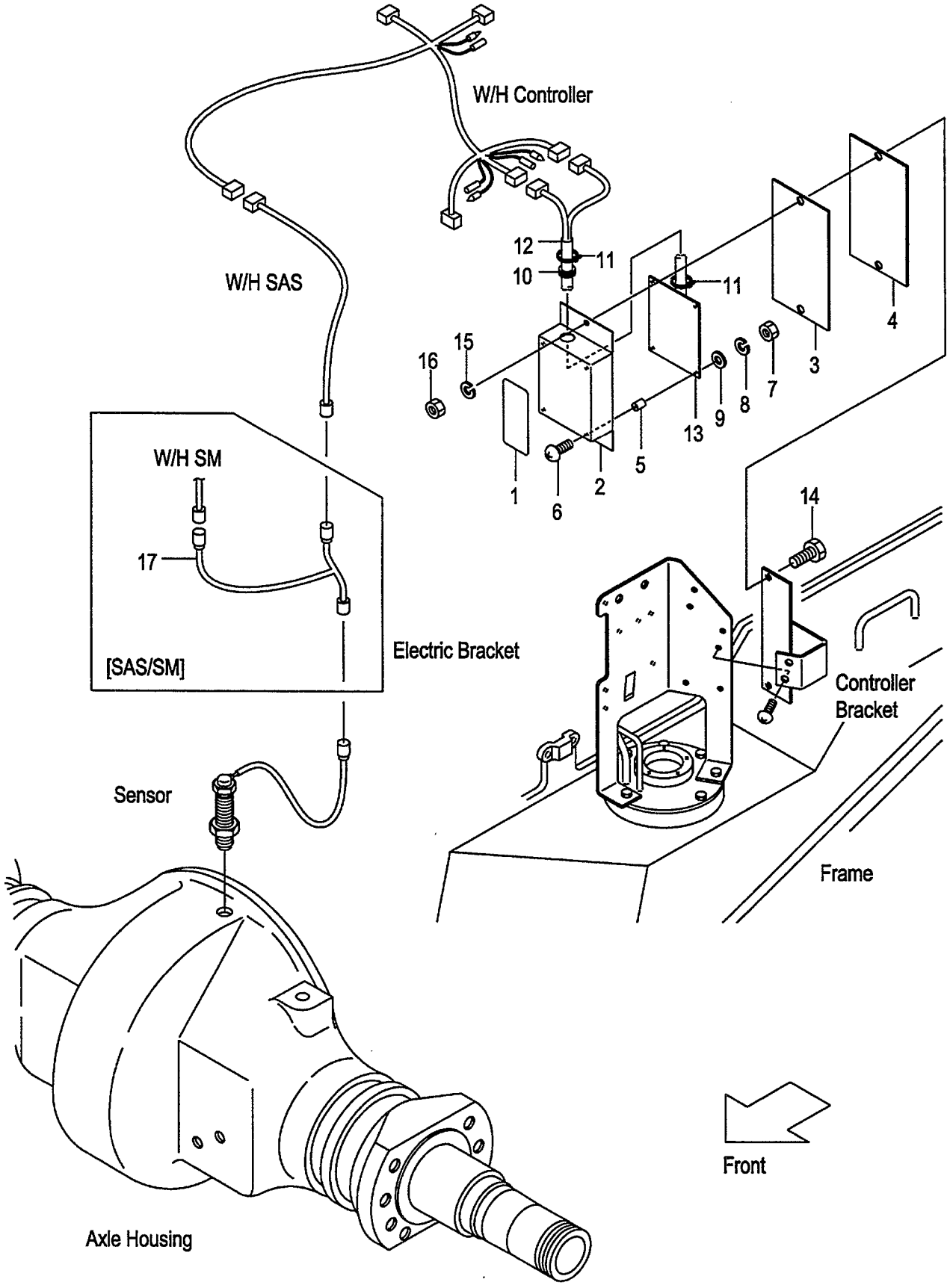

FIG.45
(F6032670)

A:FD30C7 FD30T7 FD30W7

Item No	Part No.	Mark	Description	Req'd	Remarks : Serial No.
A1	534A7-50301		UNIT-ASSY,SPEED-DETECTOR スピードディテクタユニットアッセン	1	[SASB05][SASR05][SASC05] INC.1-16
-	534A7-50401		UNIT-ASSY,SPEED-DETECTOR スピードディテクタユニットアッセン	1	[SASB10][SASR10][SASC10] INC.1-16
-	534A7-50501		UNIT-ASSY,SPEED-DETECTOR スピードディテクタユニットアッセン	1	[SASB15][SASR15][SASC15] INC.1-16
1	539A7-52311		PLATE,NAME プレート	1	[SASB05][SASR05][SASC05]
-	539A7-52411		PLATE,NAME プレート	1	[SASB10][SASR10][SASC10]
-	539A7-52511		PLATE,NAME プレート	1	[SASB15][SASR15][SASC15]
2	55792-52601		CASE ケース	1	[SASB05&10&15][SASR05&10&15] [SASC05&10&15]
3	55792-52611		SEAT,SPONG シート	1	[SASB05&10&15][SASR05&10&15] [SASC05&10&15]
4	55792-52621		PLATE プレート	1	[SASB05&10&15][SASR05&10&15] [SASC05&10&15]
5	27042-64311		SPACER スペーサ	4	[SASB05&10&15][SASR05&10&15] [SASC05&10&15]
6	01030-04020		SCREW スクリュ	4	[SASB05&10&15][SASR05&10&15] [SASC05&10&15]
7	01400-00004		NUT ナット	4	[SASB05&10&15][SASR05&10&15] [SASC05&10&15]
8	02010-00004		WASHER ワッシャ	4	[SASB05&10&15][SASR05&10&15] [SASC05&10&15]
9	02000-00004		WASHER ワッシャ	4	[SASB05&10&15][SASR05&10&15] [SASC05&10&15]
10	205A2-63311		GROMMET グロメット	1	[SASB05&10&15][SASR05&10&15] [SASC05&10&15]
11	04913-10200		BAND バンド	2	[SASB05&10&15][SASR05&10&15] [SASC05&10&15]
12	55792-52641		WIRE-HARNESS,ATC ワイヤハーネス	1	[SASB05&10&15][SASR05&10&15] [SASC05&10&15]
13	534A7-52301		BOARD,PRINTED ボード	1	[SASB05][SASR05][SASC05]
-	534A7-52401		BOARD,PRINTED ボード	1	[SASB10][SASR10][SASC10]
-	534A7-52501		BOARD,PRINTED ボード	1	[SASB15][SASR15][SASC15]
14	01100-06020		BOLT ボルト	2	[SASB05&10&15][SASR05&10&15] [SASC05&10&15]
15	02010-00006		WASHER ワッシャ	2	[SASB05&10&15][SASR05&10&15] [SASC05&10&15]
16	01400-00006		NUT ナット	2	[SASB05&10&15][SASR05&10&15] [SASC05&10&15]
17	539A7-52041		WIRE-HARNESS,SAS/SM ワイヤハーネス	1	[SAS/SM]

FIG.46 SPEED ALARM SYSTEM [SASB]

(F6032680) ｽﾋﾟｰﾄﾞｱﾗｰﾑｼｽﾃﾑ

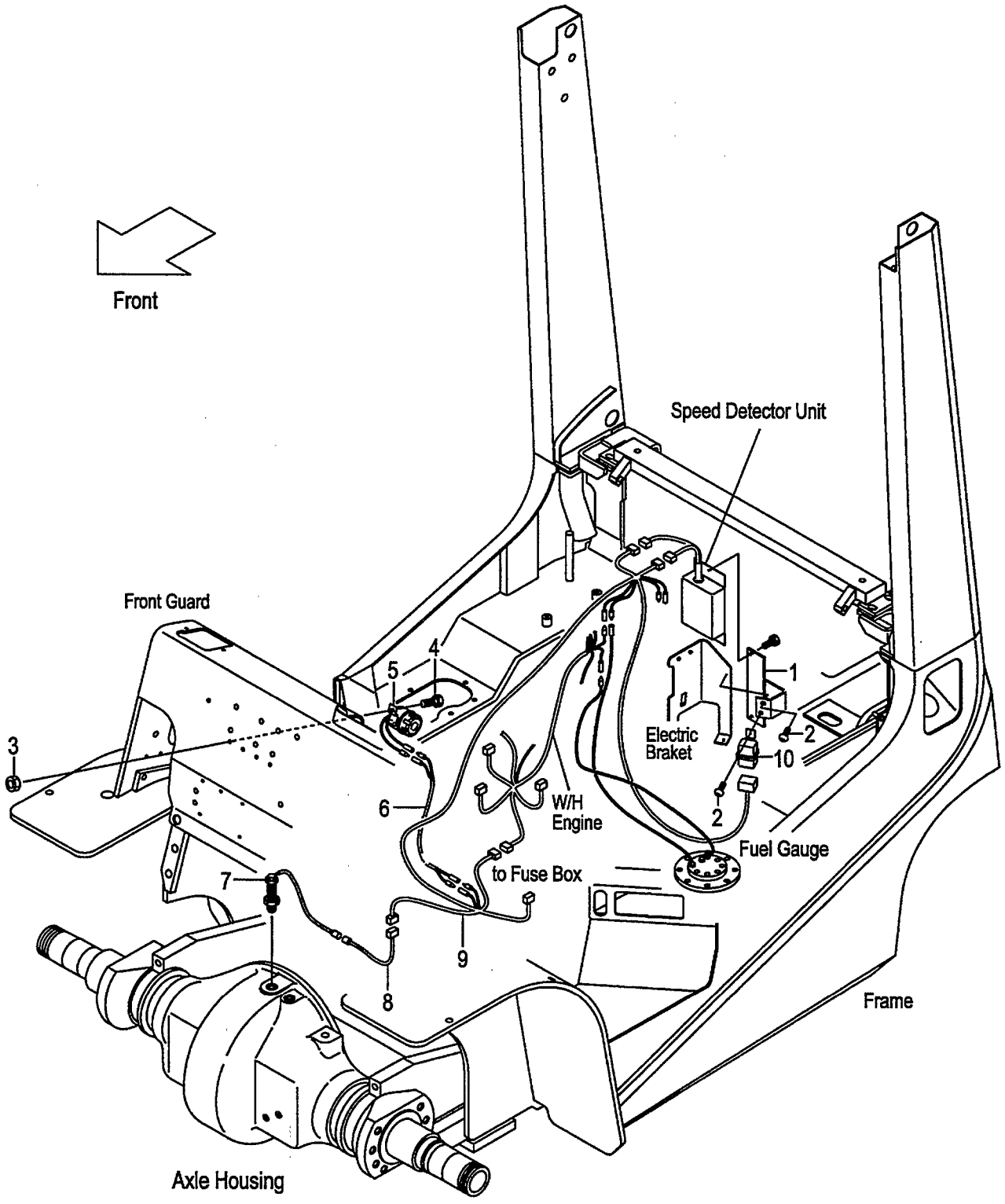

FIG.46
(F6032680)

A:FD30C7 FD30T7 FD30W7

Item No	Part No.	Mark	Description	Req'd	Remarks : Serial No.
1	539A7-52001		BRACKET,CONTROLLER ﾌﾞﾗｹｯﾄ	1	[SASB05][SASB10][SASB15]
2	214A2-42611		SCREW ｽｸﾘｭ	2	[SASB05][SASB10][SASB15]
3	01400-00006		NUT ﾅｯﾄ	1	[SASB05][SASB10][SASB15]
4	239A5-42381		BOLT ﾎﾞﾙﾄ	1	[SASB05][SASB10][SASB15]
5	529F7-52241		ALARM,BUZZER ｱﾗｰﾑ	1	[SASB05][SASB10][SASB15]
6	558A9-92001		WIRE-HARNESS,LICENCE ﾜｲﾔﾊｰﾈｽ	1	[SASB05][SASB10][SASB15]
7	16402-54331		SENSOR ｾﾝｻ	1	[SASB05][SASB10][SASB15]
8	534A7-50601		WIRE-HARNESS,SAS ﾜｲﾔﾊｰﾈｽ	1	[SASB05][SASB10][SASB15]
9	539B7-52031		WIRE-HARNESS,CONTROL ﾜｲﾔﾊｰﾈｽ	1	[SASB05][SASB10][SASB15]
10	26062-42881		RELAY,12V ﾘﾚｰ	1	[SASB05][SASB10][SASB15]

FIG.47 SPEED ALARM SYSTEM [SASR]

(F6032690) スピードアラームシステム

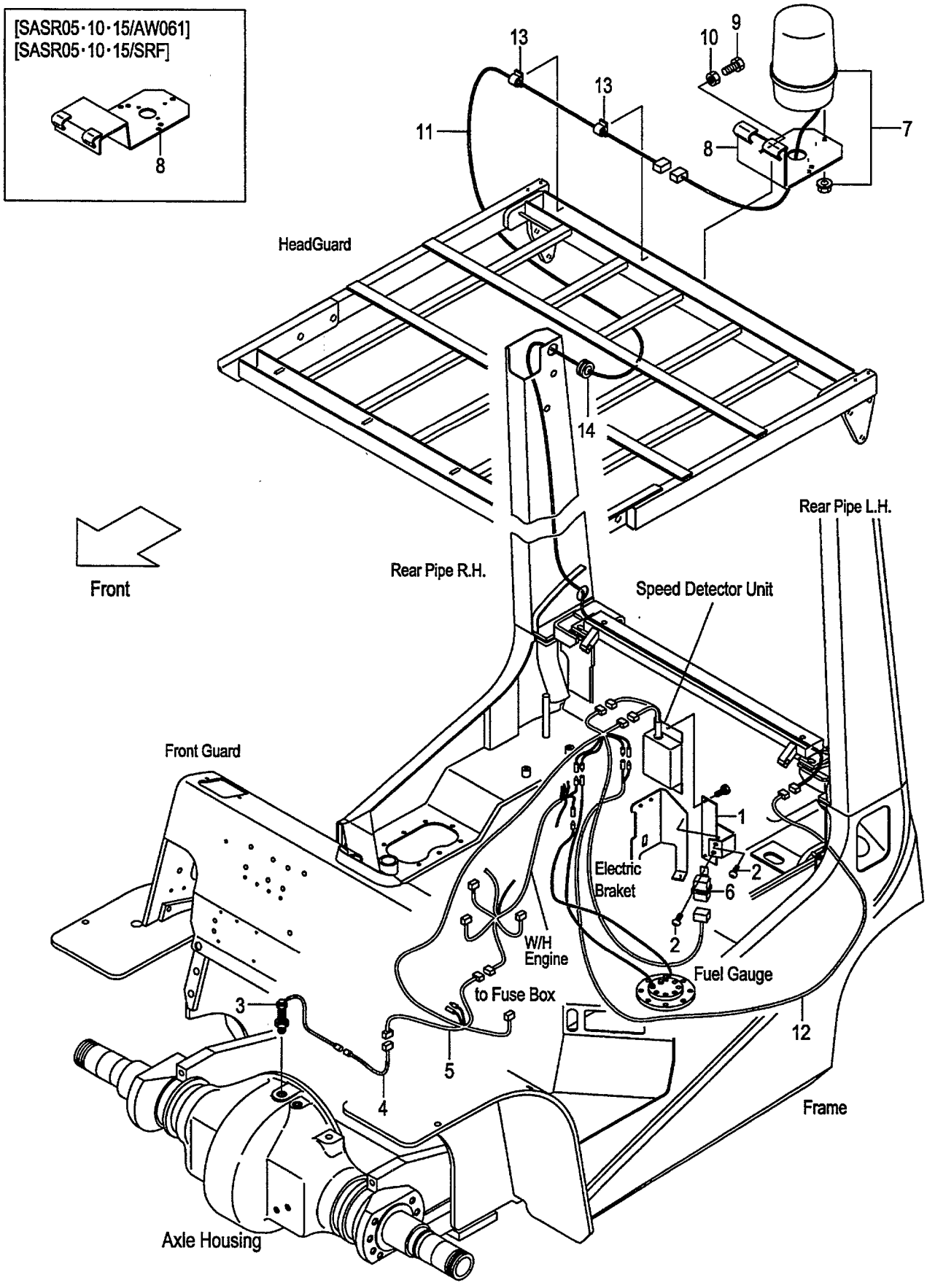

FIG.47
(F6032690)

A:FD30C7 FD30T7 FD30W7

Item No	Part No.	Mark	Description		Req'd	Remarks : Serial No.
1	539A7-52001		BRACKET,CONTROLLER	ﾌﾞﾗｹｯﾄ	1	[SASR05][SASR10][SASR15]
2	214A2-42611		SCREW	ｽｸﾘｭ	2	[SASR05][SASR10][SASR15]
3	16402-54331		SENSOR	ｾﾝｻ	1	[SASR05][SASR10][SASR15]
4	534A7-50601		WIRE-HARNESS,SAS	ﾜｲﾔﾊｰﾈｽ	1	[SASR05][SASR10][SASR15]
5	539B7-52031		WIRE-HARNESS,CONTROL	ﾜｲﾔﾊｰﾈｽ	1	[SASR05][SASR10][SASR15]
6	26062-42881		RELAY,12V	ﾘﾚｰ	1	[SASR05][SASR10][SASR15]
7	514A1-41001		LIGHT,REVOLVING	ﾗｲﾄ	1	[SASR05][SASR10][SASR15]
8	529F1-42251		BRACKET,REVOLVING	ﾌﾞﾗｹｯﾄ	1	[SASR05][SASR10][SASR15]
-	539A8-92251		BRACKET,REVOLVING	ﾌﾞﾗｹｯﾄ	1	[SASR05/AW061][SASR10/AW061] [SASR15/AW061]
-	539A8-92251		BRACKET,REVOLVING	ﾌﾞﾗｹｯﾄ	1	[SASR05/SRF][SASR10/SRF] [SASR15/SRF]
9	01100-08020		BOLT	ﾎﾞﾙﾄ	3	[SASR05][SASR10][SASR15]
10	01400-00008		NUT	ﾅｯﾄ	3	[SASR05][SASR10][SASR15]
11	514A1-42191		WIRE,LEAD	ﾜｲﾔ	1	[SASR05][SASR10][SASR15]
12	539A7-52101		WIRE,LEAD	ﾜｲﾔ	1	[SASR05][SASR10][SASR15]
13	27732-42311		CLAMP,HARNESS	ｸﾗﾝﾌﾟ	2	[SASR05][SASR10][SASR15]
14	22679-47301		GROMMET	ｸﾞﾛﾒｯﾄ	1	[SASR05][SASR10][SASR15]

FIG.48 SPEED ALARM SYSTEM [SASC]

(F60326A0) スピードアラームシステム

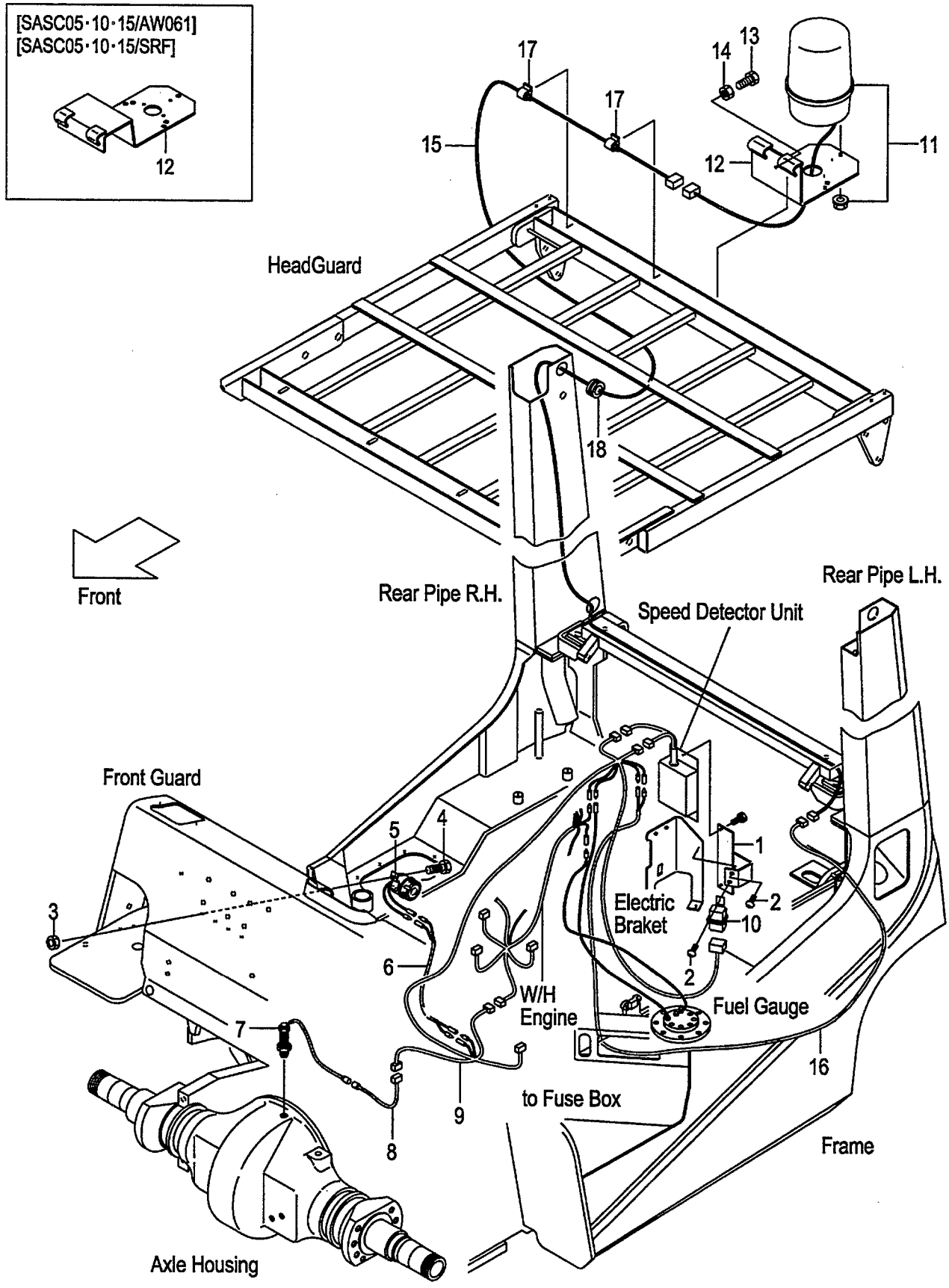

FIG.48
(F60326A0)

A:FD30C7 FD30T7 FD30W7

Item No	Part No.	Mark	Description		Req'd	Remarks : Serial No.
1	539A7-52001		BRACKET,CONTROLLER	ﾌﾞﾗｹｯﾄ	1	[SASC05][SASC10][SASC15]
2	214A2-42611		SCREW	ｽｸﾘｭ	2	[SASC05][SASC10][SASC15]
3	01400-00006		NUT	ﾅｯﾄ	1	[SASC05][SASC10][SASC15]
4	239A5-42381		BOLT	ﾎﾞﾙﾄ	1	[SASC05][SASC10][SASC15]
5	529F7-52241		ALARM,BUZZER	ｱﾗｰﾑ	1	[SASC05][SASC10][SASC15]
6	558A9-92001		WIRE-HARNESS,LICENCE	ﾜｲﾔﾊｰﾈｽ	1	[SASC05][SASC10][SASC15]
7	16402-54331		SENSOR	ｾﾝｻ	1	[SASC05][SASC10][SASC15]
8	534A7-50601		WIRE-HARNESS,SAS	ﾜｲﾔﾊｰﾈｽ	1	[SASC05][SASC10][SASC15]
9	539B7-52031		WIRE-HARNESS,CONTROL	ﾜｲﾔﾊｰﾈｽ	1	[SASC05][SASC10][SASC15]
10	26062-42881		RELAY,12V	ﾘﾚｰ	1	[SASC05][SASC10][SASC15]
11	514A1-41001		LIGHT,REVOLVING	ﾗｲﾄ	1	[SASC05][SASC10][SASC15]
12	529F1-42251		BRACKET,REVOLVING	ﾌﾞﾗｹｯﾄ	1	[SASC05][SASC10][SASC15]
-	539A8-92251		BRACKET,REVOLVING	ﾌﾞﾗｹｯﾄ	1	[SASR05/AW061][SASC10/AW061] [SASC15/AW061]
-	539A8-92251		BRACKET,REVOLVING	ﾌﾞﾗｹｯﾄ	1	[SASR05/SRF][SASC10/SRF] [SASC15/SRF]
13	01100-08020		BOLT	ﾎﾞﾙﾄ	3	[SASC05][SASC10][SASC15]
14	01400-00008		NUT	ﾅｯﾄ	3	[SASC05][SASC10][SASC15]
15	514A1-42191		WIRE,LEAD	ﾜｲﾔ	1	[SASC05][SASC10][SASC15]
16	539A7-52101		WIRE,LEAD	ﾜｲﾔ	1	[SASC05][SASC10][SASC15]
17	27732-42311		CLAMP,HARNESS	ｸﾗﾝﾌﾟ	2	[SASC05][SASC10][SASC15]
18	22679-47301		GROMMET	ｸﾞﾛﾒｯﾄ	1	[SASC05][SASC10][SASC15]

FIG.49 OK MONITOR [OKM]

(F60326B0) OKモニタ

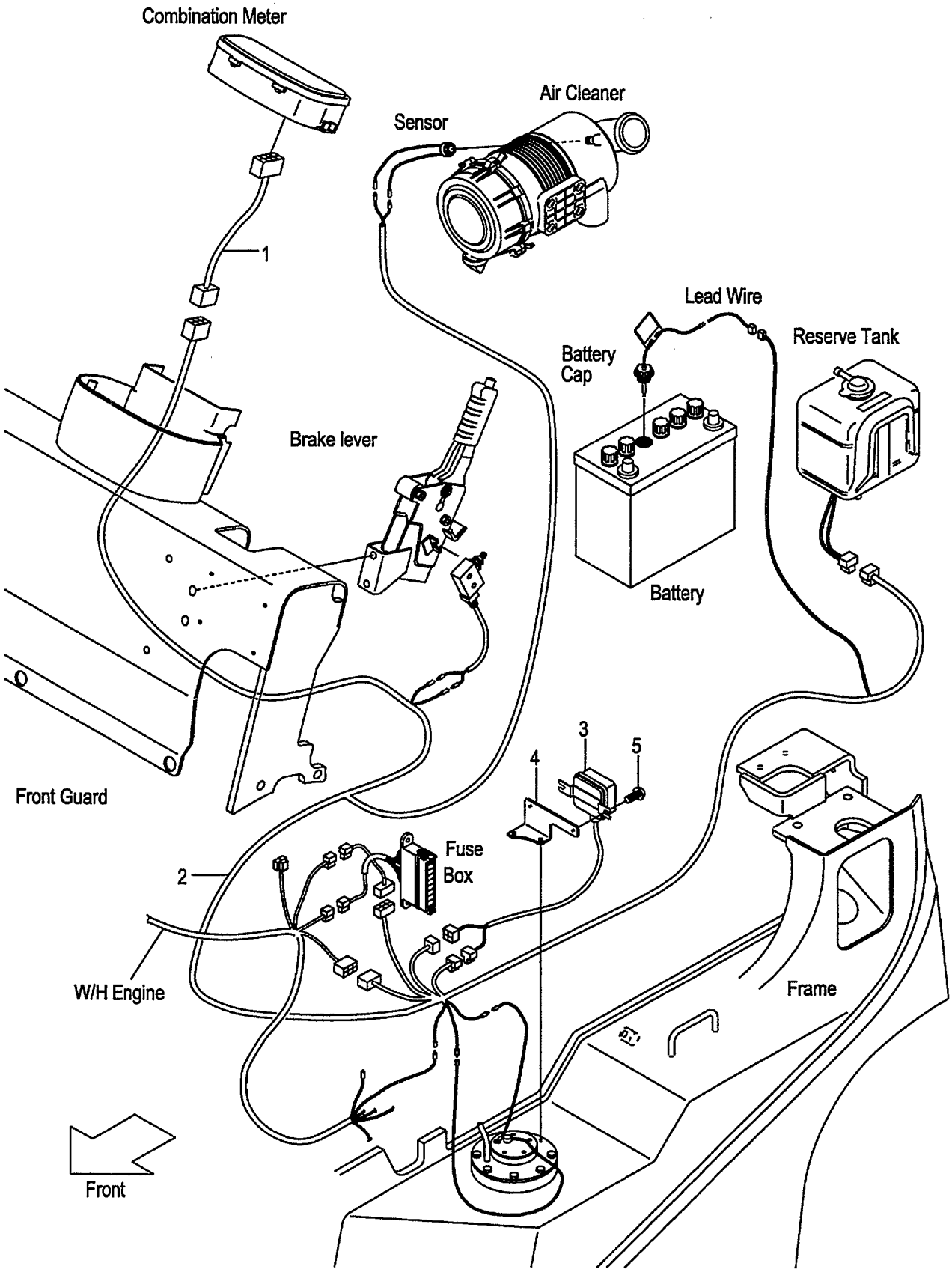

FIG.49
(F60326B0)

A:FD30C7 FD30T7 FD30W7

Item No	Part No.	Mark	Description		Req'd	Remarks : Serial No.
1	516G6-22011		WIRE,LEAD	ﾜｲﾔ	1	[OKM]
2	539A6-22011		WIRE-HARNESS,OKM	ﾜｲﾔﾊｰﾈｽ	1	[OKM]
3	229F2-42161		MODULE,WARNING	ﾓｼﾞｭｰﾙ	1	[OKM]
4	539A6-22001		BRACKET,WARN.MODULE	ﾌﾞﾗｹｯﾄ	1	[OKM]
5	214A2-42611		SCREW	ｽｸﾘｭ	2	[OKM]

FIG.50 DRIVE UNIT MOUNT (CLUTCH)

(F6032510) ﾄﾞﾗｲﾌﾞﾕﾆｯﾄﾏｳﾝﾄ

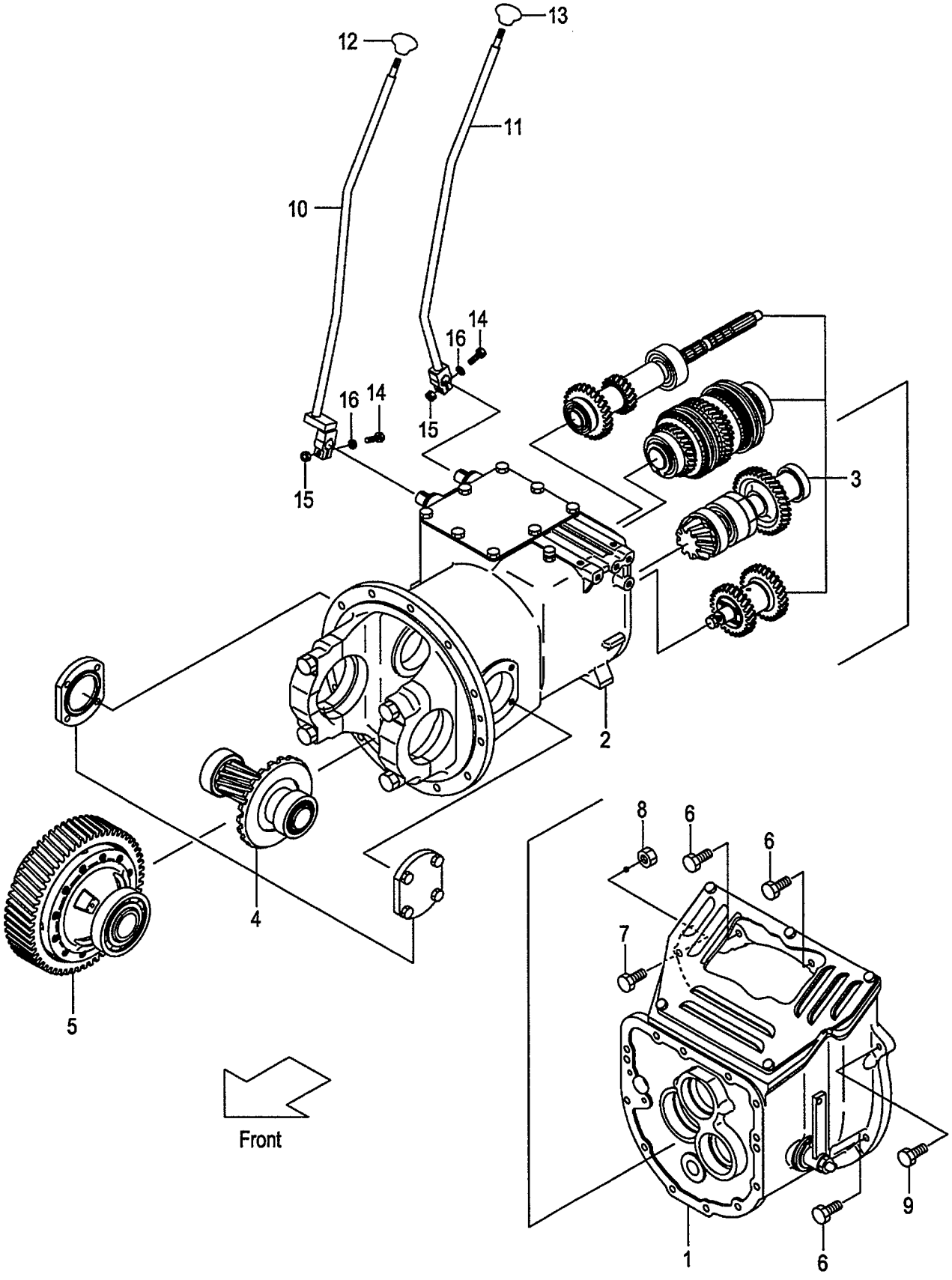

A:FD30C7

Item No	Part No.	Mark	Description		Req'd	Remarks : Serial No.
A1	136F2-50002		UNIT-ASSY,DRIVE	ﾄﾞﾗｲﾌﾞﾕﾆｯﾄｱｯｾﾝ	1	INC.1-5
-	136F2-50042		UNIT-ASSY,DRIVE	ﾄﾞﾗｲﾌﾞﾕﾆｯﾄｱｯｾﾝ	1	[PC] INC.1-5
1	NO PART NO.		CLUTCH	ｸﾗｯﾁ	1	SEE FIG.51
-	NO PART NO.		CLUTCH	ｸﾗｯﾁ	1	[PC]SEE FIG.51
2	NO PART NO.		CASE,T/M	ｹｰｽ	1	SEE FIG.52
3	NO PART NO.		GEAR,T/M	ｷﾞﾔｰ	1	SEE FIG.53
4	NO PART NO.		REDUCTION	ﾘﾀﾞｸｼｮﾝ	1	SEE FIG.60
5	NO PART NO.		DIFFERENTIAL	ﾃﾞﾌｧﾚﾝｼｬﾙ	1	SEE FIG.61
6	01183-10035		BOLT	ﾎﾞﾙﾄ	3	
7	01184-10050		BOLT	ﾎﾞﾙﾄ	4	
8	01400-00010		NUT	ﾅｯﾄ	4	
9	01183-08040		BOLT	ﾎﾞﾙﾄ	1	
10	239A2-52001		LEVER,SPEED	ﾚﾊﾞｰ	1	
-	539A2-32001		LEVER,SPEED	ﾚﾊﾞｰ	1	[LCR]
11	239A2-52061		LEVER,DIRECTION	ﾚﾊﾞｰ	1	
-	539A2-32041		LEVER,DIRECTION	ﾚﾊﾞｰ	1	[LCR]
12	214A2-52002		KNOB,SPEED	ﾉﾌﾞ	1	
13	214A2-52012		KNOB,DIRECTION	ﾉﾌﾞ	1	
14	01100-08045		BOLT	ﾎﾞﾙﾄ	2	
15	01400-00008		NUT	ﾅｯﾄ	2	
16	02010-00008		WASHER	ﾜｯｼｬ	2	

FIG.51 CLUTCH (CLUTCH)

(F6032520) クラッチ

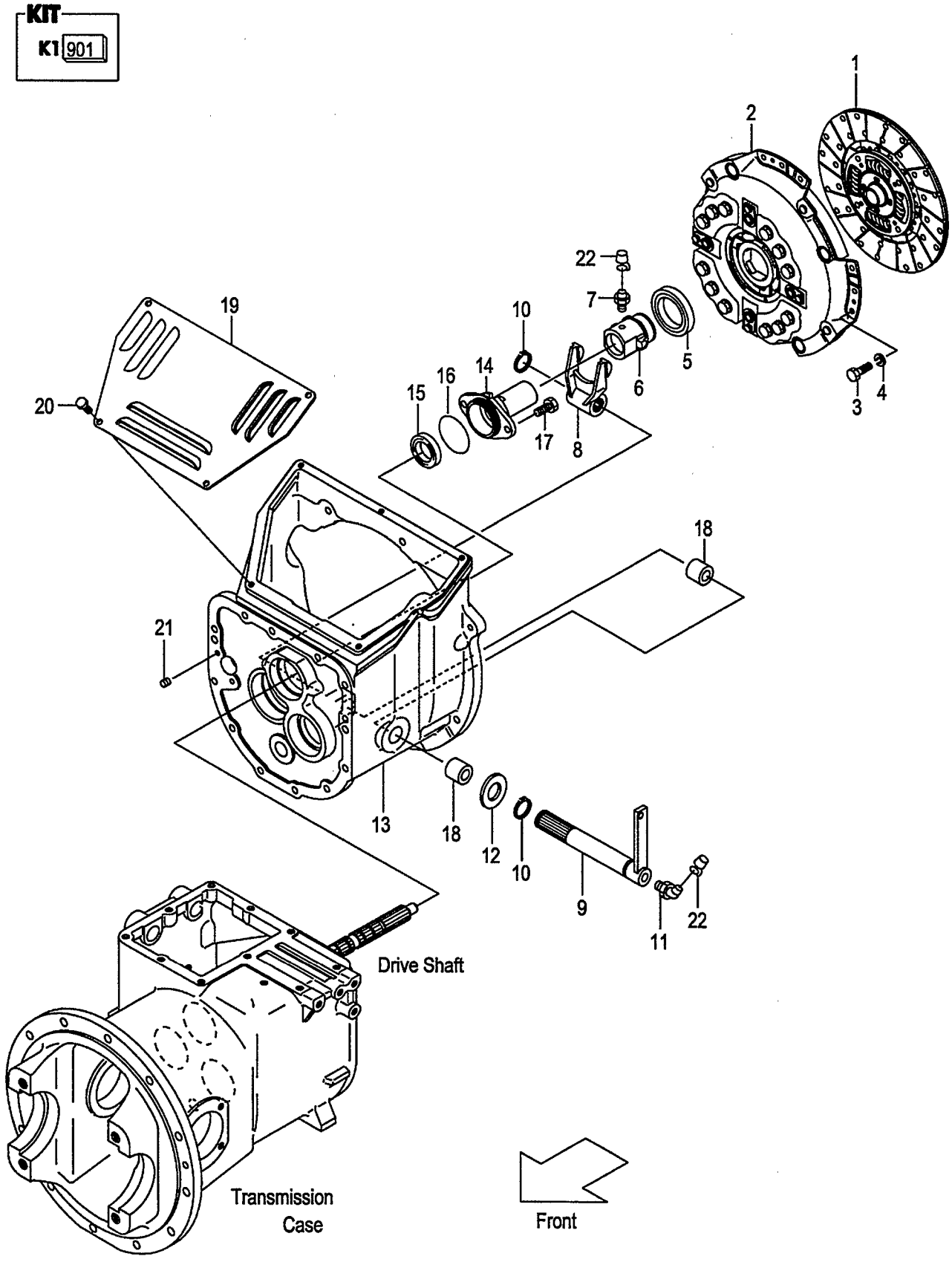

FIG.51
(F6032520)

A:FD30C7

Item No	Part No.	Mark	Description		Req'd	Remarks : Serial No.
901	134A3-48911	K1	KIT,REPAIR,T/M	ﾘﾍﾟｱｷｯﾄ	1	INC.10,15,16 &,OTHERS
1	134A3-10211		DISK,CLUTCH	ﾃﾞｨｽｸ	1	
2	131A3-10201		COVER,CLUTCH	ｶﾊﾞｰ	1	
3	01103-08016		BOLT	ﾎﾞﾙﾄ	12	
4	02011-00008		WASHER	ﾜｯｼｬ	12	
5	15533-10301		BRG,THRUST	ﾍﾞｱﾘﾝｸﾞ	1	
6	134A3-12011		RETAINER,BRG	ﾘﾃｰﾅ	1	
7	04901-00100		FITTING	ﾌｨｯﾃｨﾝｸﾞ	1	
8	114A3-12012		YOKE	ﾖｰｸ	1	
9	114A3-10501		SHAFT	ｼｬﾌﾄ	1	
-	524G2-10502		SHAFT	ｼｬﾌﾄ	1	[PC]
10	02100-00025	*	RING,SNAP	ｽﾅｯﾌﾟﾘﾝｸﾞ	2	
11	04901-00160		FITTING	ﾌｨｯﾃｨﾝｸﾞ	1	
12	02000-00024		WASHER	ﾜｯｼｬ	1	
13	142F3-12001		HOUSING,CLUTCH	ﾊｳｼﾞﾝｸﾞ	1	
14	134A3-12021		SUPPORT,RETAINER	ｻﾎﾟｰﾄ	1	
15	134A3-12031	*	SEAL,OIL	ｼｰﾙ	1	
16	03310-00600	*	O-RING	Oﾘﾝｸﾞ	1	
17	01213-10025		BOLT	ﾎﾞﾙﾄ	2	
18	12003-12021		BUSHING	ﾌﾞｯｼﾝｸﾞ	2	
19	124G3-12011		COVER,CLUTCH-HOUSING	ｶﾊﾞｰ	1	
20	01183-08016		BOLT	ﾎﾞﾙﾄ	5	
21	01066-08008		PLUG	ﾌﾟﾗｸﾞ	2	
22	22199-12401		CAP,NIPPLE	ｷｬｯﾌﾟ	2	

FIG.52 MISSION CASE (CLUTCH)(OIL CLUTCH)

(F6032530) ミッションケース

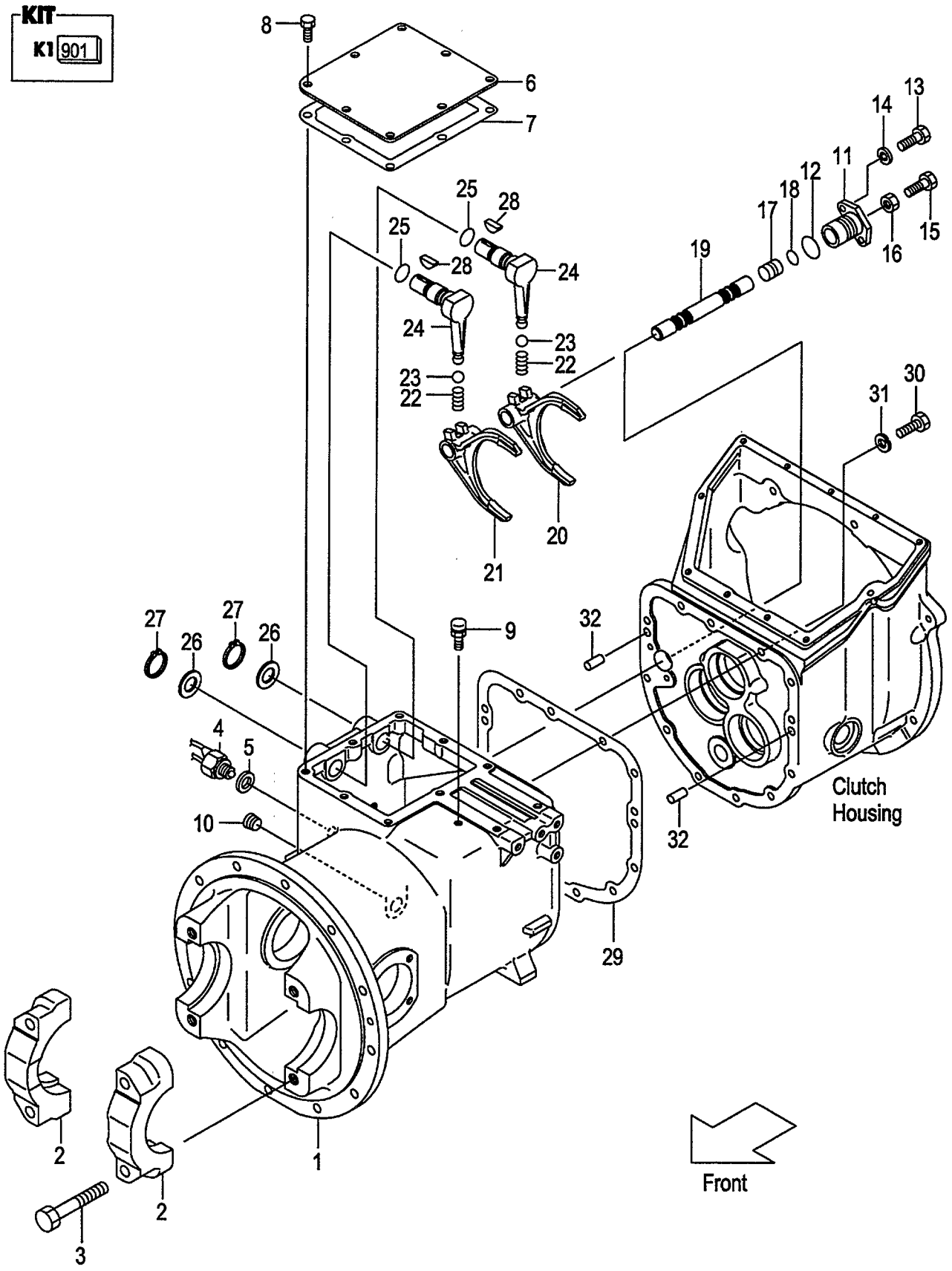

A:FD30C7
B:FD30W7

FIG.52
(F6032530)

Item No	Part No.	Mark	Description		Req'd	Remarks : Serial No.
901	134A3-48911	K1	KIT,REPAIR,T/M	ﾘﾍﾟｱｷｯﾄ	1	A INC.5,7,12,18,25,27-29 & OTHERS
A1	134A3-40201		CASE-ASSY,T/M	ﾄﾗﾝｽﾐｯｼｮﾝｹｰｽｱｯｾﾝ	1	INC.1,2
1	NO PART NO.	#	CASE,T/M	ｹｰｽ	1	
2	NO PART NO.	#	CAP,BRG	ｷｬｯﾌﾟ	2	
3	134A3-42221		BOLT	ﾎﾞﾙﾄ	4	
4	12003-42451		SWITCH,BACK-LAMP	ｽｲｯﾁ	2	
5	12003-42461	*	PACKING,BACK-LAMP	ﾊﾟｯｷﾝｸﾞ	2	
6	134A3-42021		COVER,CASE	ｶﾊﾞｰ	1	
7	134A3-42031	*	GASKET,CASE-COVER	ｶﾞｽｹｯﾄ	1	
8	01184-10016		BOLT	ﾎﾞﾙﾄ	8	
9	15573-42151		BREATHER,AIR	ﾌﾞﾘｰｻﾞ	1	
10	12163-82541		PLUG	ﾌﾟﾗｸﾞ	1	
11	12003-42052		SUPPORT,ARM-SHAFT	ｻﾎﾟｰﾄ	1	
12	03310-00300	*	O-RING	Oﾘﾝｸﾞ	1	
13	01103-08020		BOLT	ﾎﾞﾙﾄ	2	
14	02011-00008		WASHER	ﾜｯｼｬ	2	
15	01123-10045		BOLT	ﾎﾞﾙﾄ	1	
16	01400-00010		NUT	ﾅｯﾄ	1	
17	12003-42061		SPACER	ｽﾍﾟｰｻ	1	
18	03300-00160	*	O-RING	Oﾘﾝｸﾞ	1	
19	134A3-42401		ROD,SHIFT	ﾛｯﾄﾞ	1	
20	134A3-42411		FORK,SHIFT,F-R	ﾌｫｰｸ	1	
21	134A3-42421		FORK,SHIFT,H-L	ﾌｫｰｸ	1	
22	12003-42421		SPRING	ｽﾌﾟﾘﾝｸﾞ	2	
23	03190-00013		BALL,STEEL	ﾎﾞｰﾙ	2	
24	134A3-42431		LEVER,SHIFT	ﾚﾊﾞｰ	2	
25	134A3-42451	*	O-RING	Oﾘﾝｸﾞ	2	
26	02000-00022		WASHER	ﾜｯｼｬ	2	
27	02100-00022	*	RING,SNAP	ｽﾅｯﾌﾟﾘﾝｸﾞ	2	
28	02360-05019	*	KEY	ｷｰ	2	
29	134A3-12051	*	GASKET	ｶﾞｽｹｯﾄ	1	
30	01103-10030		BOLT	ﾎﾞﾙﾄ	12	
31	02011-00010		WASHER	ﾜｯｼｬ	12	
32	02212-12020		PIN,PARALLEL	ﾋﾟﾝ	2	

FIG.53 MISSION GEAR (CLUTCH)(OIL CLUTCH)

(F6032540) ミッションギヤー

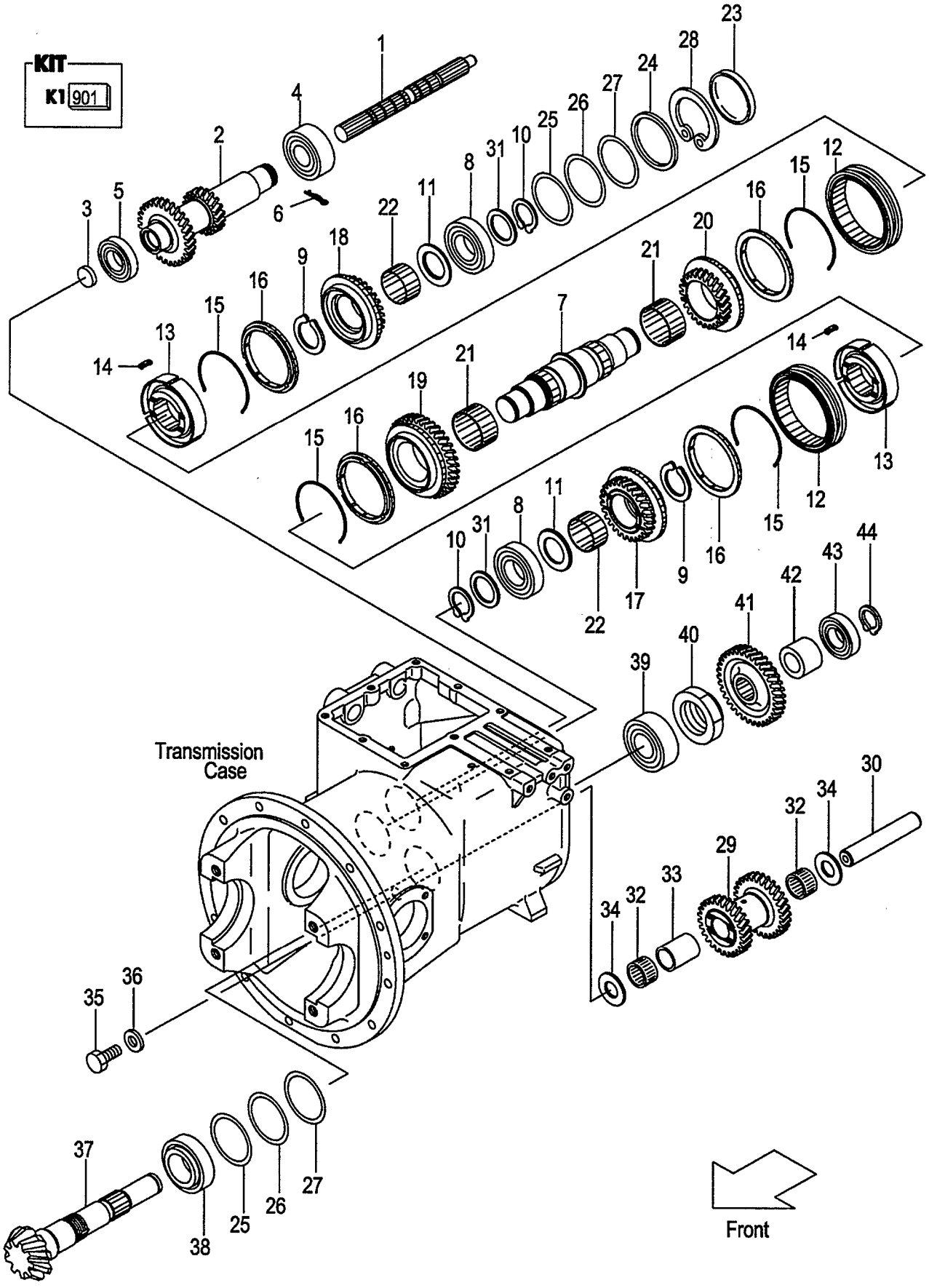

A:FD30C7
B:FD30W7

FIG.53
(F6032540)

Item No	Part No.	Mark	Description		Req'd	Remarks : Serial No.
901	134A3-48911	K1	KIT,REPAIR,T/M	ﾘﾍﾟｱｷｯﾄ	1	A INC.6,9,10,23,25-28,40,44 & OTHERS
1	134A3-42051		SHAFT,MAIN-DRIVE	ｼｬﾌﾄ	1	
2	136F3-42001		SHAFT,INPUT	ｼｬﾌﾄ	1	
3	134A3-42071		CAP	ｷｬｯﾌﾟ	1	
4	03000-06207		BRG,BALL	ﾍﾞｱﾘﾝｸﾞ	1	
5	03000-06208		BRG,BALL	ﾍﾞｱﾘﾝｸﾞ	1	
6	134A3-42081	*	PIN,SNAP	ﾋﾟﾝ	1	
7	134A3-42101		SHAFT,MAIN	ｼｬﾌﾄ	1	
8	134A3-42211		BRG,BALL	ﾍﾞｱﾘﾝｸﾞ	2	
9	02120-00050	*	RING,SNAP	ｽﾅｯﾌﾟﾘﾝｸﾞ	2	
10	02100-00040	*	RING,SNAP	ｽﾅｯﾌﾟﾘﾝｸﾞ	2	
11	124T3-43001		PLATE,THRUST	ﾌﾟﾚｰﾄ	2	
A1	134A3-40221		SYNCHRONIZER-ASSY	ｼﾝｸﾛﾅｲｻﾞｱｯｾﾝ	2	INC.12-15
12	134A3-42111		SLEEVE	ｽﾘｰﾌﾞ	2	
13	134A3-42121		HUB,CLUTCH	ﾊﾌﾞ	2	
14	15573-42011		INSERT	ｲﾝｻｰﾄ	6	
15	134A3-42131		SPRING	ｽﾌﾟﾘﾝｸﾞ	4	
16	134A3-42141		RING,BLOCK	ﾘﾝｸﾞ	4	
17	139A3-42011		GEAR,HIGH	ｷﾞﾔｰ	1	
18	134A3-42151		GEAR,HIGH & FORWAD	ｷﾞﾔｰ	1	
19	131A3-42021		GEAR,LOW-SPEED	ｷﾞﾔｰ	1	
20	134A3-42171		GEAR,REVERSE	ｷﾞﾔｰ	1	
21	134A3-42181		BRG,NEEDLE	ﾍﾞｱﾘﾝｸﾞ	2	
22	134A3-42191		BRG,NEEDLE	ﾍﾞｱﾘﾝｸﾞ	2	
23	134A3-42201	*	CAP	ｷｬｯﾌﾟ	1	
24	10113-40171		WASHER	ﾜｯｼｬ	1	
25	12003-42311	*	SHIM,T-0.5	ｼﾑ	2	
26	12003-42321	*	SHIM,T-0.2	ｼﾑ	4	
27	12003-42331	*	SHIM,T-0.1	ｼﾑ	2	
28	02121-00080	*	RING,SNAP	ｽﾅｯﾌﾟﾘﾝｸﾞ	1	
29	134A3-42251		GEAR,COUNTER	ｷﾞﾔｰ	1	
30	134A3-42261		SHAFT,COUNTER-GEAR	ｼｬﾌﾄ	1	
31	15913-42511		SPACER	ｽﾍﾟｰｻ	2	
32	12003-42281		BRG,NEEDLE	ﾍﾞｱﾘﾝｸﾞ	2	
33	12003-42291		SPACER	ｽﾍﾟｰｻ	1	
34	134A3-42271		PLATE,THRUST	ﾌﾟﾚｰﾄ	2	
35	01103-10020		BOLT	ﾎﾞﾙﾄ	1	
36	02000-00010		WASHER	ﾜｯｼｬ	1	
37	134A3-42301		SHAFT,OUTPUT	ｼｬﾌﾄ	1	
38	115G3-82641		BRG,TAPER-ROLLER	ﾍﾞｱﾘﾝｸﾞ	1	
39	12003-43031		BRG,TAPER-ROLLER	ﾍﾞｱﾘﾝｸﾞ	1	
40	115G3-82471	*	NUT	ﾅｯﾄ	1	
41	134A3-42321		GEAR,OUTPUT	ｷﾞﾔｰ	1	
42	134A3-42331		SPACER	ｽﾍﾟｰｻ	1	
43	03000-06306		BRG,BALL	ﾍﾞｱﾘﾝｸﾞ	1	
44	02100-00030	*	RING,SNAP	ｽﾅｯﾌﾟﾘﾝｸﾞ	1	

FIG.54 DRIVE UNIT MOUNT (TOR-CON)

(F60325A0) ﾄﾞﾗｲﾌﾞﾕﾆｯﾄﾏｳﾝﾄ

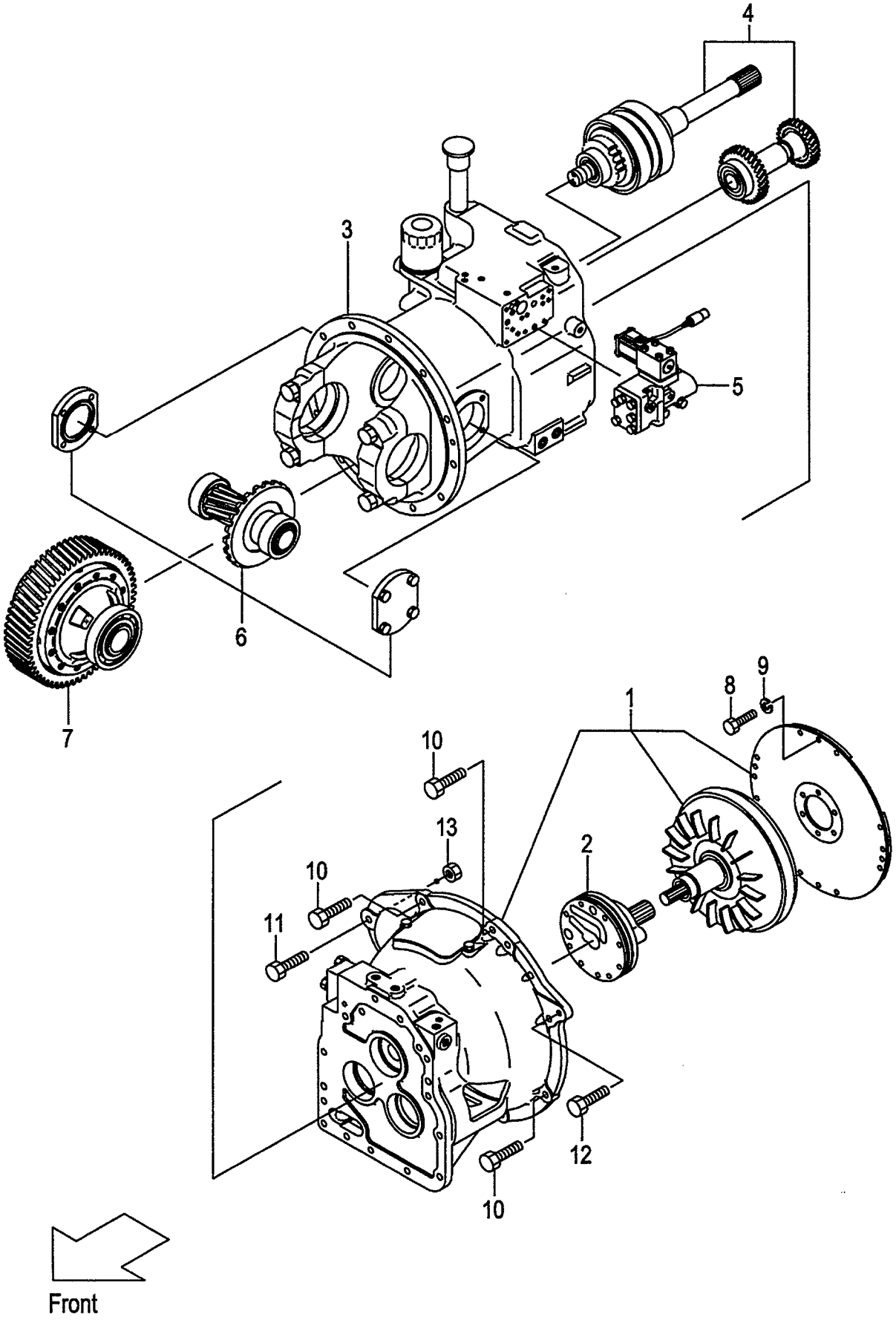

A:FD30T7

Item No	Part No.	Mark	Description		Req'd	Remarks : Serial No.
A1	137B2-50003		UNIT-ASSY,DRIVE	ﾄﾞﾗｲﾌﾞﾕﾆｯﾄｱｯｾﾝ	1	INC.1-7
-	537B3-80002		UNIT-ASSY,DRIVE	ﾄﾞﾗｲﾌﾞﾕﾆｯﾄｱｯｾﾝ	1	[EXE][EXN] INC.1-7
-	136G2-50002		UNIT-ASSY,DRIVE	ﾄﾞﾗｲﾌﾞﾕﾆｯﾄｱｯｾﾝ	1	[EXK] INC.1-7
1	NO PART NO.		CASE,T/C	ｹｰｽ	1	SEE FIG.55
2	NO PART NO.		PUMP	ﾎﾟﾝﾌﾟ	1	SEE FIG.56
3	NO PART NO.		CASE,T/M	ｹｰｽ	1	SEE FIG.57
-	NO PART NO.		CASE,T/M	ｹｰｽ	1	[EXE][EXN]SEE FIG.57
-	NO PART NO.		CASE,T/M	ｹｰｽ	1	[EXK]SEE FIG.57
4	NO PART NO.		PACK,CLUTCH	ﾊﾟｯｸ	1	SEE FIG.58
-	NO PART NO.		PACK,CLUTCH	ﾊﾟｯｸ	1	[EXK]SEE FIG.58
5	NO PART NO.		VALVE	ﾊﾞﾙﾌﾞ	1	SEE FIG.59
6	NO PART NO.		REDUCTION	ﾘﾀﾞｸｼｮﾝ	1	SEE FIG.60
7	NO PART NO.		DIFFERENTIAL	ﾃﾞﾌｧﾚﾝｼｬﾙ	1	SEE FIG.61
8	01103-10016		BOLT	ﾎﾞﾙﾄ	8	
9	02011-00010		WASHER	ﾜｯｼｬ	8	
10	01183-10035		BOLT	ﾎﾞﾙﾄ	3	
11	01184-10050		BOLT	ﾎﾞﾙﾄ	4	
12	01183-08040		BOLT	ﾎﾞﾙﾄ	1	
13	01400-00010		NUT	ﾅｯﾄ	4	

FIG.55 TORQUE CONVERTER CASE (TOR-CON)

(F60325B0) トルクコンバータケース

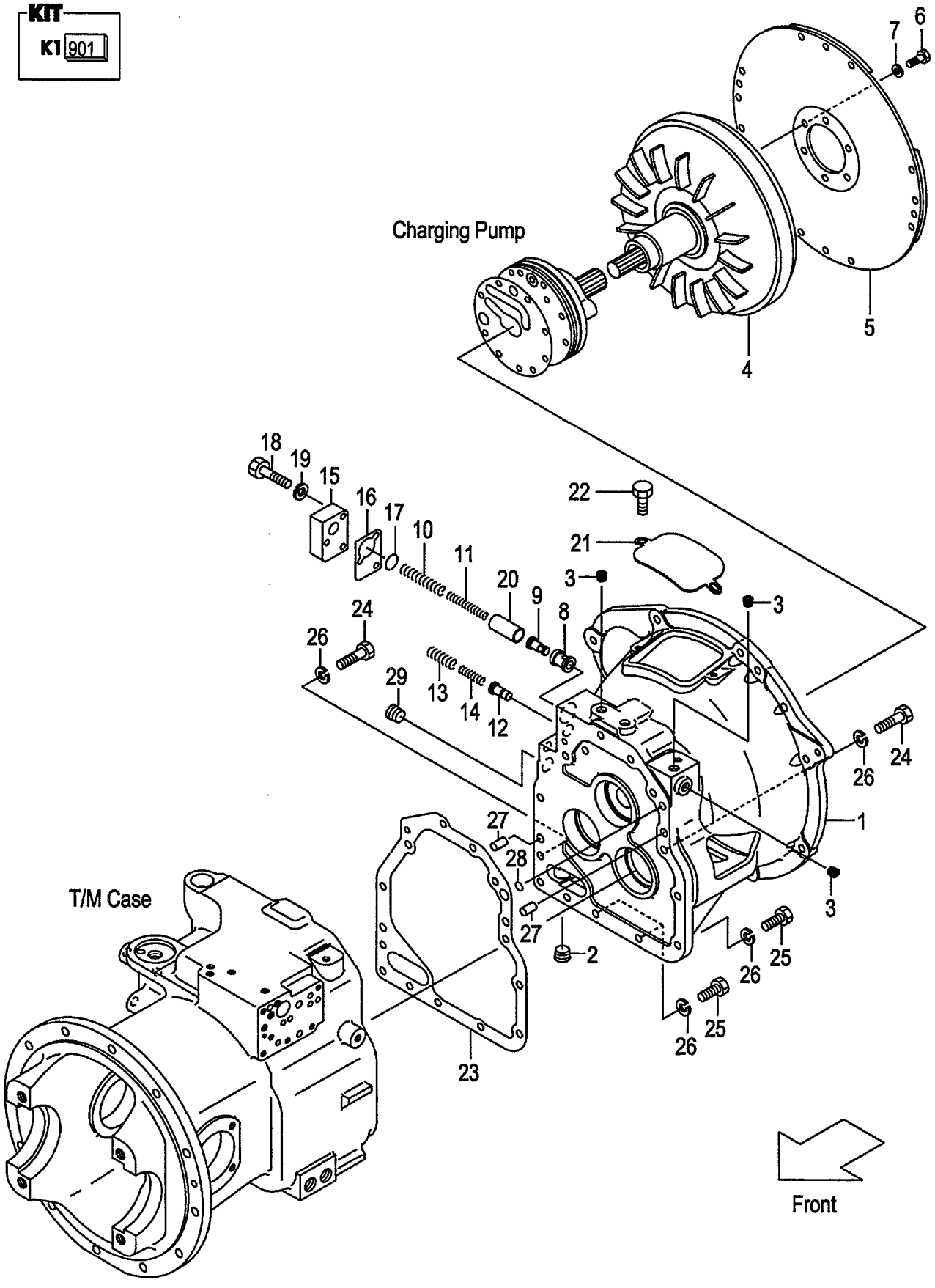

FIG.55
(F60325B0)

A:FD30T7

Item No	Part No.	Mark	Description		Req'd	Remarks : Serial No.
901	134B3-89821	K1	KIT,REPAIR,D/U	ﾘﾍﾟｱｷｯﾄ	1	INC.23,28 & OTHERS
1	142G3-82001		CASE,TOR-CON	ｹｰｽ	1	
2	27397-52101		PLUG	ﾌﾟﾗｸﾞ	1	
3	116H3-82101		PLUG	ﾌﾟﾗｸﾞ	4	
4	137B3-80201		TORQUE-CONVERTER	ﾄﾙｸｺﾝﾊﾞｰﾀ	1	
5	137B3-80211		PLATE,INPUT	ﾌﾟﾚｰﾄ	1	
6	12163-82621		BOLT	ﾎﾞﾙﾄ	6	
7	02003-20010		WASHER	ﾜｯｼｬ	6	
8	134B3-82281		SLEEVE	ｽﾘｰﾌﾞ	1	
9	134B3-82301		PISTON	ﾋﾟｽﾄﾝ	1	
10	134B3-82021		SPRING	ｽﾌﾟﾘﾝｸﾞ	1	
11	134B3-82031		SPRING	ｽﾌﾟﾘﾝｸﾞ	1	
12	134B3-82011		PISTON	ﾋﾟｽﾄﾝ	1	
13	134B3-82311		SPRING	ｽﾌﾟﾘﾝｸﾞ	1	
14	134B3-82321		SPRING	ｽﾌﾟﾘﾝｸﾞ	1	
15	134B3-82041		COVER	ｶﾊﾞｰ	1	
16	134B3-82051		GASKET	ｶﾞｽｹｯﾄ	1	
17	15583-82541		O-RING	Oﾘﾝｸﾞ	1	
18	01103-08040		BOLT	ﾎﾞﾙﾄ	3	
19	02011-00008		WASHER	ﾜｯｼｬ	3	
20	134B3-82291		COLLAR	ｶﾗｰ	1	
21	131M2-52001		COVER	ｶﾊﾞｰ	1	
22	01185-08020		BOLT	ﾎﾞﾙﾄ	2	
23	134B3-82101	*	GASKET	ｶﾞｽｹｯﾄ	1	
24	01103-10065		BOLT	ﾎﾞﾙﾄ	10	
25	01103-10030		BOLT	ﾎﾞﾙﾄ	3	
26	02011-00010		WASHER	ﾜｯｼｬ	13	
27	02212-12020		PIN,PARALLEL	ﾋﾟﾝ	2	
28	15583-82521	*	O-RING	Oﾘﾝｸﾞ	1	
29	12163-82541		PLUG	ﾌﾟﾗｸﾞ	1	

FIG.56 CHARGING PUMP (TOR-CON)

(F60325C0) ﾁｬｰｼﾞﾝｸﾞﾎﾟﾝﾌﾟ

KIT

K1 901 K2 902

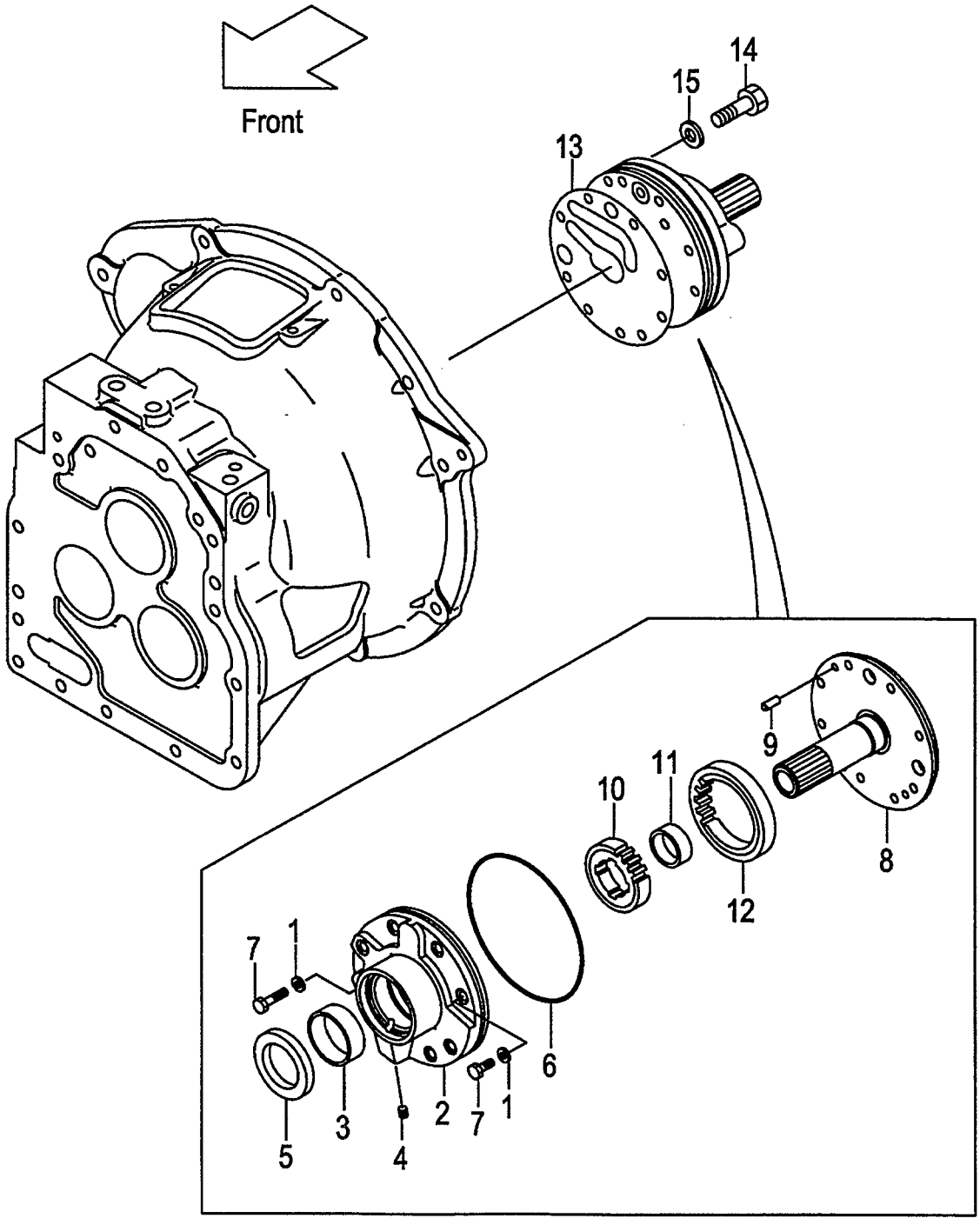

A:FD30T7

Item No	Part No.	Mark	Description		Req'd	Remarks : Serial No.
901	134B3-89861	K1	KIT,REPAIR,PUMP	ﾘﾍﾟｱｷｯﾄ	1	INC.1,5,6,13,15
A1	134G3-80401		PUMP-ASSY,CHARGING	ﾁｬｰｼﾞﾝｸﾞﾎﾟﾝﾌﾟｱｯｾﾝ	1	INC.1-12
902	134G3-89851	K2	KIT,BODY,PUMP	ﾎﾞﾃﾞｨｰｷｯﾄ	1	INC.2,8,10-12
1	12163-82561	*	PACKING	ﾊﾟｯｷﾝｸﾞ	2	
A2	15583-82141		CASE-ASSY,PUMP	ﾎﾟﾝﾌﾟｹｰｽｱｯｾﾝ	1	INC.2-4
2	NO PART NO.	#*	CASE,PUMP	ｹｰｽ	1	
3	15583-82161		BUSHING	ﾌﾞｯｼﾝｸﾞ	1	
4	23870-52821		PLUG	ﾌﾟﾗｸﾞ	1	
5	15583-82172	*	SEAL,OIL	ｼｰﾙ	1	
6	15583-82181	*	O-RING	Oﾘﾝｸﾞ	1	
7	01103-08035		BOLT	ﾎﾞﾙﾄ	2	
8	134G3-82001	*	SUPPORT,STARTER	ｻﾎﾟｰﾄ	1	
9	02212-06016		PIN,PARALLEL	ﾋﾟﾝ	2	
A3	15583-82211		GEAR-ASSY	ｷﾞﾔｰｱｯｾﾝ	1	INC.10-12
10	NO PART NO.	#*	GEAR,DRIVE	ｷﾞﾔｰ	1	
11	15583-82241	*	BUSHING	ﾌﾞｯｼﾝｸﾞ	1	
12	NO PART NO.	#*	GEAR,DRIVEN	ｷﾞﾔｰ	1	
13	134B3-82091	*	GASKET	ｶﾞｽｹｯﾄ	1	
14	01103-08045		BOLT	ﾎﾞﾙﾄ	6	
15	12163-82561	*	PACKING	ﾊﾟｯｷﾝｸﾞ	6	

FIG.57 MISSION CASE (TOR-CON)

(F60325D0) ミッションケース

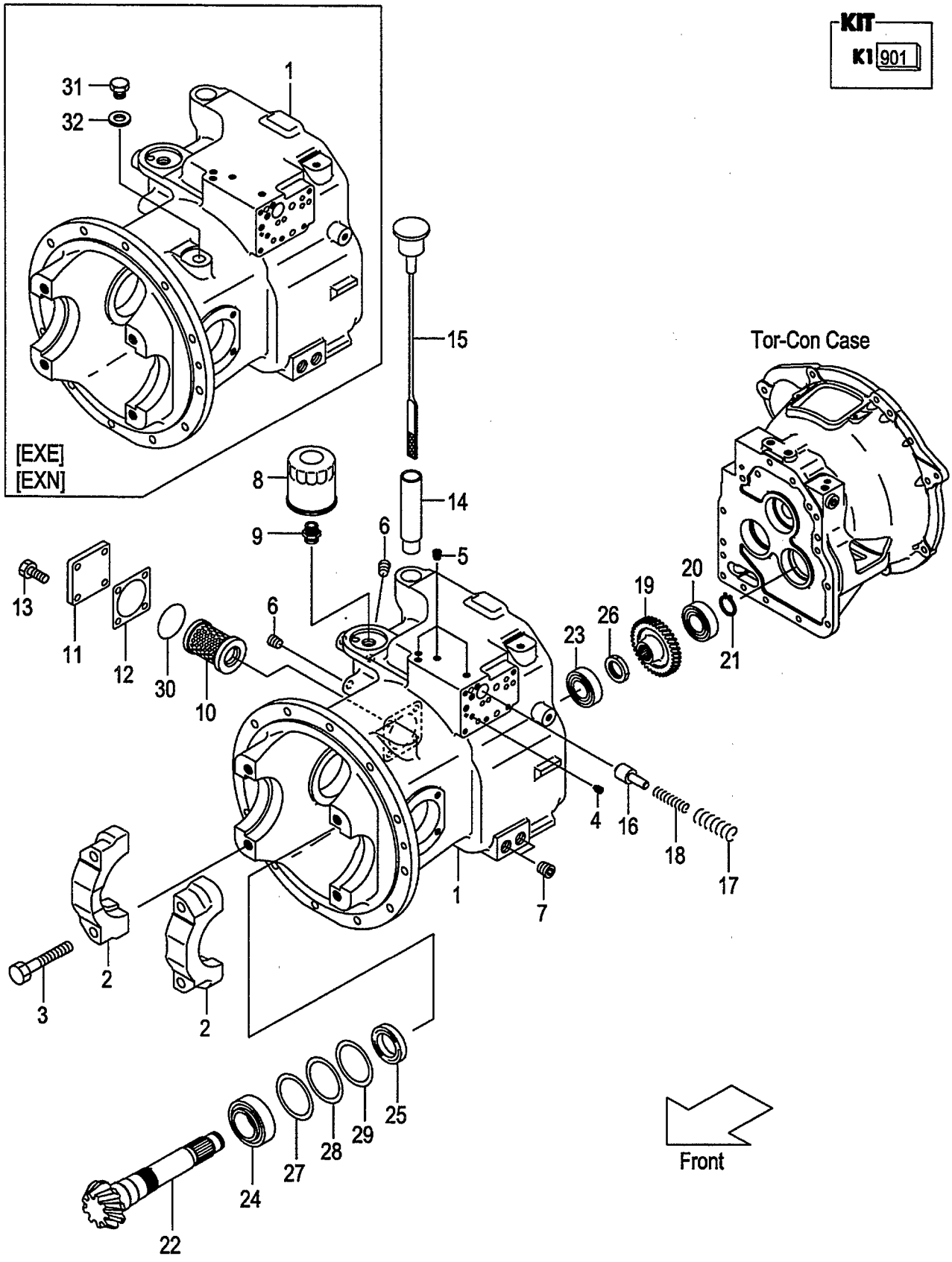

A:FD30T7

Item No	Part No.	Mark	Description		Req'd	Remarks : Serial No.
901	134B3-89821	K1	KIT,REPAIR,D/U	ﾘﾍﾟｱｷｯﾄ	1	INC.12,21,25-29& OTHERS
A1	134B3-80281		CASE-ASSY,T/M		1	INC.1,2
				ﾄﾗﾝｽﾐｯｼｮﾝｹｰｽｱｯｾﾝ		
-	534B3-80281		CASE-ASSY,T/M		1	[EXE][EXN] INC.1,2
				ﾄﾗﾝｽﾐｯｼｮﾝｹｰｽｱｯｾﾝ		
1	NO PART NO.	#	CASE,T/M	ｹｰｽ	1	
-	NO PART NO.	#	CASE,T/M	ｹｰｽ	1	[EXE][EXN]
2	NO PART NO.	#	CAP,BRG	ｷｬｯﾌﾟ	2	
3	134A3-42221		BOLT	ﾎﾞﾙﾄ	4	
4	115G3-82671		PLUG,CHOKE	ﾌﾟﾗｸﾞ	1	
5	116H3-82201		PLUG	ﾌﾟﾗｸﾞ	4	
6	116H3-82101		PLUG	ﾌﾟﾗｸﾞ	2	
7	12163-82541		PLUG	ﾌﾟﾗｸﾞ	2	
8	115G3-82241		FILTER,OIL	ﾌｨﾙﾀ	1	
9	115G3-82251		NIPPLE	ﾆｯﾌﾟﾙ	1	
10	124U3-82521		STRAINER,SUCTION	ｽﾄﾚｰﾅ	1	
11	124U3-82081		COVER,PLATE	ｶﾊﾞｰ	1	
12	124U3-82091	*	GASKET	ｶﾞｽｹｯﾄ	1	
13	01184-10025		BOLT	ﾎﾞﾙﾄ	4	
14	12163-82221		PIPE,OIL-FILL	ﾊﾟｲﾌﾟ	1	
15	12163-82232		CAP,OIL-FILL	ｷｬｯﾌﾟ	1	
16	15583-82441		SPOOL,ACC	ｽﾌﾟｰﾙ	1	
17	15583-82451		SPRING	ｽﾌﾟﾘﾝｸﾞ	1	
18	15583-82461		SPRING	ｽﾌﾟﾘﾝｸﾞ	1	
19	115G3-82451		GEAR,OUTPUT	ｷﾞｬｰ	1	
-	134B3-82381		GEAR,OUTPUT	ｷﾞｬｰ	1	[EXK]
20	03000-06306		BRG,BALL	ﾍﾞｱﾘﾝｸﾞ	1	
21	02100-00030	*	RING,SNAP	ｽﾅｯﾌﾟﾘﾝｸﾞ	1	
22	134B3-82141		SHAFT,OUTPUT	ｼｬﾌﾄ	1	
23	12003-43031		BRG,TAPER-ROLLER	ﾍﾞｱﾘﾝｸﾞ	1	
24	115G3-82641		BRG,TAPER-ROLLER	ﾍﾞｱﾘﾝｸﾞ	1	
25	115G3-82651	*	SEAL,OIL	ｼｰﾙ	1	
26	115G3-82471	*	NUT	ﾅｯﾄ	1	
27	12003-42311	*	SHIM,T-0.5	ｼﾑ	1	
28	12003-42321	*	SHIM,T-0.2	ｼﾑ	2	
29	12003-42331	*	SHIM,T-0.1	ｼﾑ	1	
30	115G3-82111		O-RING	Oﾘﾝｸﾞ	1	
31	124T3-42651		BOLT	ﾎﾞﾙﾄ	1	[EXE][EXN]
32	124T3-42661		WASHER	ﾜｯｼｬ	1	[EXE][EXN]

FIG.58 CLUTCH PACK (TOR-CON)

(F60325E0) クラッチパック

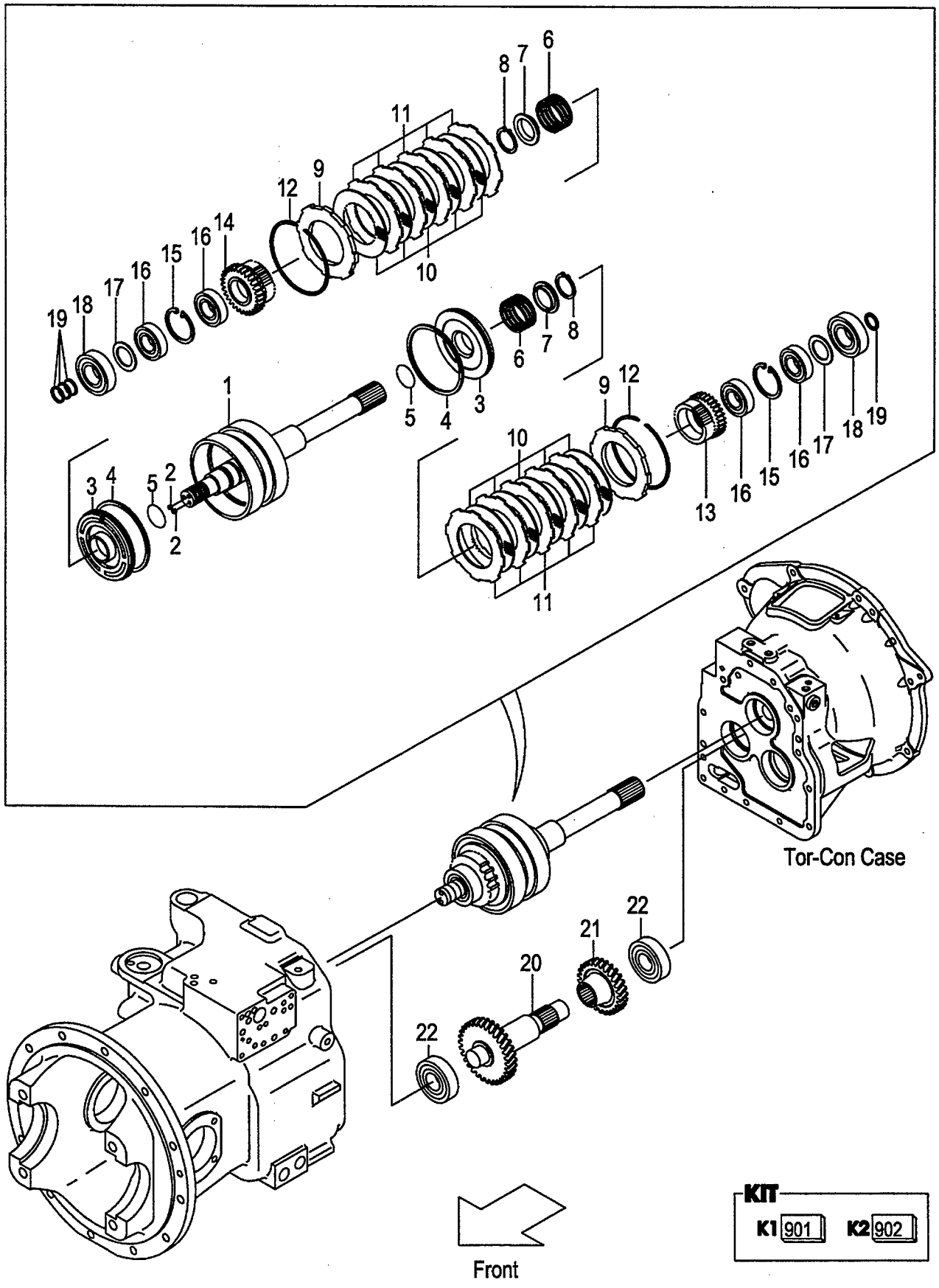

A:FD30T7

Item No	Part No.	Mark	Description		Req'd	Remarks : Serial No.
A1	134G3-80201		CLUTCH-ASSY,HYDRO	ｸﾗｯﾁｱｯｾﾝ	1	INC.1-19
-	132G3-80201		CLUTCH-ASSY,HYDRO	ｸﾗｯﾁｱｯｾﾝ	1	[EXK] INC.1-19
901	134G3-89811	K1	KIT,REPAIR,CLUTCH	ﾘﾍﾟｱｷｯﾄ	1	INC.4,5,7,8,12,19
A2	134G3-80251		CLUTCH-SUB-ASSY,HYD	ｸﾗｯﾁｻﾌﾞｱｯｾﾝ	1	INC.1-12
902	134G3-89831	K2	KIT,REPAIR,DISK	ﾘﾍﾟｱｷｯﾄ	1	INC.10,11
1	134G3-82101		SHAFT,INPUT	ｼｬﾌﾄ	1	INC.2
2	01066-08008		PLUG	ﾌﾟﾗｸﾞ	2	
3	134G3-82111		PISTON	ﾋﾟｽﾄﾝ	2	
4	134G3-82141	*	RING,SEAL	ﾘﾝｸﾞ	2	
5	11243-82211	*	O-RING	Oﾘﾝｸﾞ	2	
6	11243-82081		SPRING,RETURN,CLUTCH	ｽﾌﾟﾘﾝｸﾞ	2	
7	11243-82091	*	SHEET,SPRING	ｼｰﾄ	2	
8	02100-00040	*	RING,SNAP	ｽﾅｯﾌﾟﾘﾝｸﾞ	2	
9	134G3-82131		END,CLUTCH	ｴﾝﾄﾞ	2	
10	134B3-82401	*	PLATE,FRICTION	ﾌﾟﾚｰﾄ	10	
11	134G3-82121	*	PLATE,MATING	ﾌﾟﾚｰﾄ	10	
12	11243-82181	*	RING,SNAP	ｽﾅｯﾌﾟﾘﾝｸﾞ	2	
13	115G3-82331		GEAR,FORWARD	ｷﾞﾔｰ	1	
-	134B3-82361		GEAR,FORWARD	ｷﾞﾔｰ	1	[EXK]
14	115G3-82341		GEAR,REVERSE	ｷﾞﾔｰ	1	
15	02121-00058		RING,SNAP	ｽﾅｯﾌﾟﾘﾝｸﾞ	2	
16	115G3-82351		BRG,BALL	ﾍﾞｱﾘﾝｸﾞ	4	
17	115G3-82361		PLATE,THRUST	ﾌﾟﾚｰﾄ	2	
18	03000-06306		BRG,BALL	ﾍﾞｱﾘﾝｸﾞ	2	
19	11243-82161	*	RING,SEAL	ﾘﾝｸﾞ	4	
20	115G3-82401		SHAFT,IDLER	ｼｬﾌﾄ	1	
21	115G3-82411		GEAR,IDLER	ｷﾞﾔｰ	1	
-	134B3-82371		GEAR,IDLER	ｷﾞﾔｰ	1	[EXK]
22	03000-06306		BRG,BALL	ﾍﾞｱﾘﾝｸﾞ	2	

FIG.59 CONTROL VALVE (TOR-CON)

(F60325F0) コントロールバルブ

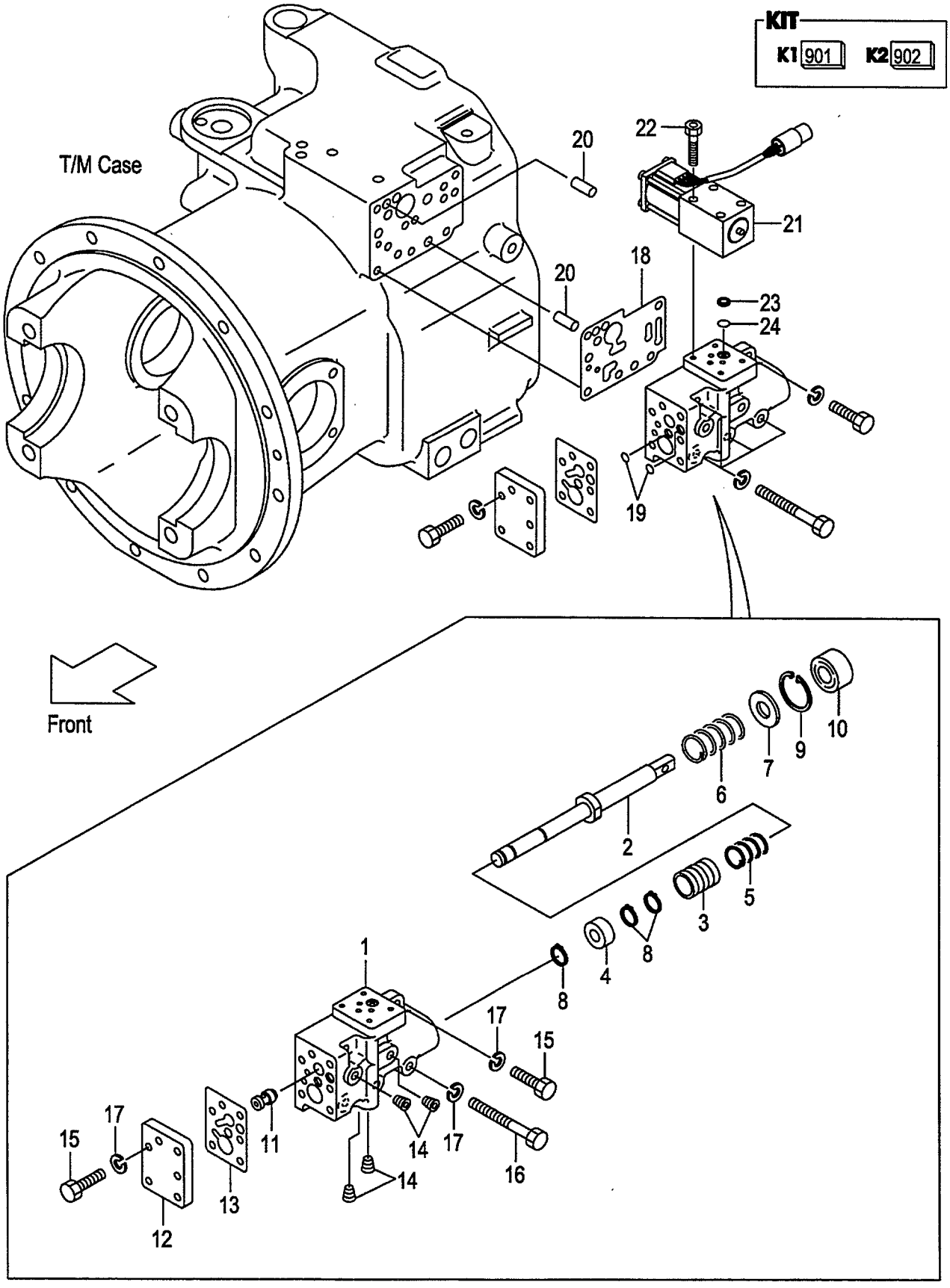

A:FD30T7

Item No	Part No.	Mark	Description		Req'd	Remarks : Serial No.
901	139B3-89801	K1	KIT,REPAIR,VALVE	ﾘﾍﾟｱｷｯﾄ	1	INC.8-10,13,18,19,23,24
A1	139B3-80201		VALVE-ASSY,CONTROL	ｺﾝﾄﾛｰﾙﾊﾞﾙﾌﾞｱｯｾﾝ	1	INC.1-17
902	139B3-89811	K2	KIT,BODY,VALVE	ﾎﾞﾃﾞｨｰｷｯﾄ	1	INC.1-4,11
1	NO PART NO.	#*	BODY,VALVE	ﾎﾞﾃﾞｨ	1	
2	115G3-82512	*	SPOOL,INCHING	ｽﾌﾟｰﾙ	1	
3	15793-82321	*	PLUNGER	ﾌﾟﾗﾝｼﾞｬ	1	
4	115G3-82522	*	PISTON	ﾋﾟｽﾄﾝ	1	
5	15793-82341		SPRING	ｽﾌﾟﾘﾝｸﾞ	1	
6	115G3-82491		SPRING	ｽﾌﾟﾘﾝｸﾞ	1	
7	15943-82651		SPACER	ｽﾍﾟｰｻ	1	
8	02100-00012	*	RING,SNAP	ｽﾅｯﾌﾟﾘﾝｸﾞ	3	
9	02110-00030	*	RING,SNAP	ｽﾅｯﾌﾟﾘﾝｸﾞ	1	
10	15943-82661	*	SEAL,OIL	ｼｰﾙ	1	
11	139B3-82121	*	SPOOL	ｽﾌﾟｰﾙ	1	
12	139B3-82111		COVER,VALVE	ｶﾊﾞｰ	1	
13	139B3-82131	*	GASKET,COVER	ｶﾞｽｹｯﾄ	1	
14	116H3-82201		PLUG	ﾌﾟﾗｸﾞ	4	
15	01103-08025		BOLT	ﾎﾞﾙﾄ	7	
16	01103-08060		BOLT	ﾎﾞﾙﾄ	4	
17	02011-00008		WASHER	ﾜｯｼｬ	11	
18	139B3-82141	*	GASKET	ｶﾞｽｹｯﾄ	1	
19	15583-82571	*	O-RING	Oﾘﾝｸﾞ	2	
20	02212-10025		PIN,PARALLEL	ﾋﾟﾝ	2	
21	135L3-82002		VALVE,SOLENOID	ﾊﾞﾙﾌﾞ	1	
22	01170-05045		BOLT	ﾎﾞﾙﾄ	4	
23	139B3-82161	*	FILTER,COIN	ﾌｨﾙﾀ	1	
24	139B3-82151	*	O-RING	Oﾘﾝｸﾞ	1	

FIG.60 REDUCTION

(F60325G0) リダクション

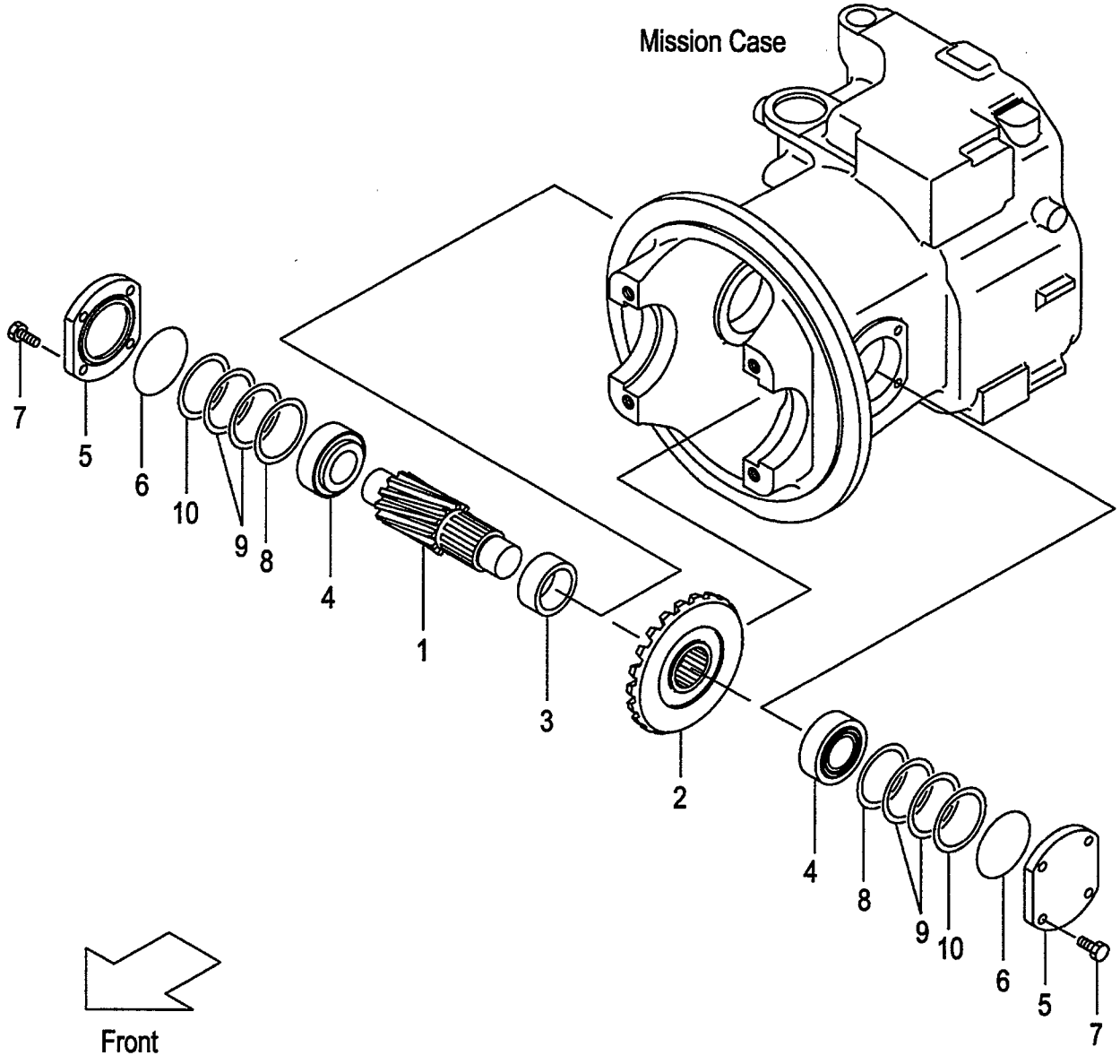

A:FD30C7
B:FD30T7
C:FD30W7

FIG.60
(F60325G0)

Item No	Part No.	Mark	Description		Req'd	Remarks : Serial No.
901	134A3-48911	K1	KIT,REPAIR,T/M	ﾘﾍﾟｱｷｯﾄ	1	A
						INC.6,8-10 & OTHERS
1	134A3-22001		SHAFT,FINAL-PINION	ｼｬﾌﾄ	1	
2	134A3-22011		GEAR,SPIRAL-BEVEL	ｷﾞﾔｰ	1	
3	134A3-22021		SPACER	ｽﾍﾟｰｻ	1	
4	134A3-22031		BRG,TAPER-ROLLER	ﾍﾞｱﾘﾝｸﾞ	2	
5	134A3-22041		COVER,BRG	ｶﾊﾞｰ	2	
6	03310-00800	*	O-RING	Oﾘﾝｸﾞ	2	
7	01184-10025		BOLT	ﾎﾞﾙﾄ	8	
8	12003-42311	*	SHIM,T-0.5	ｼﾑ	2	
9	12003-42321	*	SHIM,T-0.2	ｼﾑ	4	
10	12003-42331	*	SHIM,T-0.1	ｼﾑ	2	

FIG.61 DIFFERENTIAL

(F60325H0) ﾃﾞｨﾌｧﾚﾝｼｬﾙ

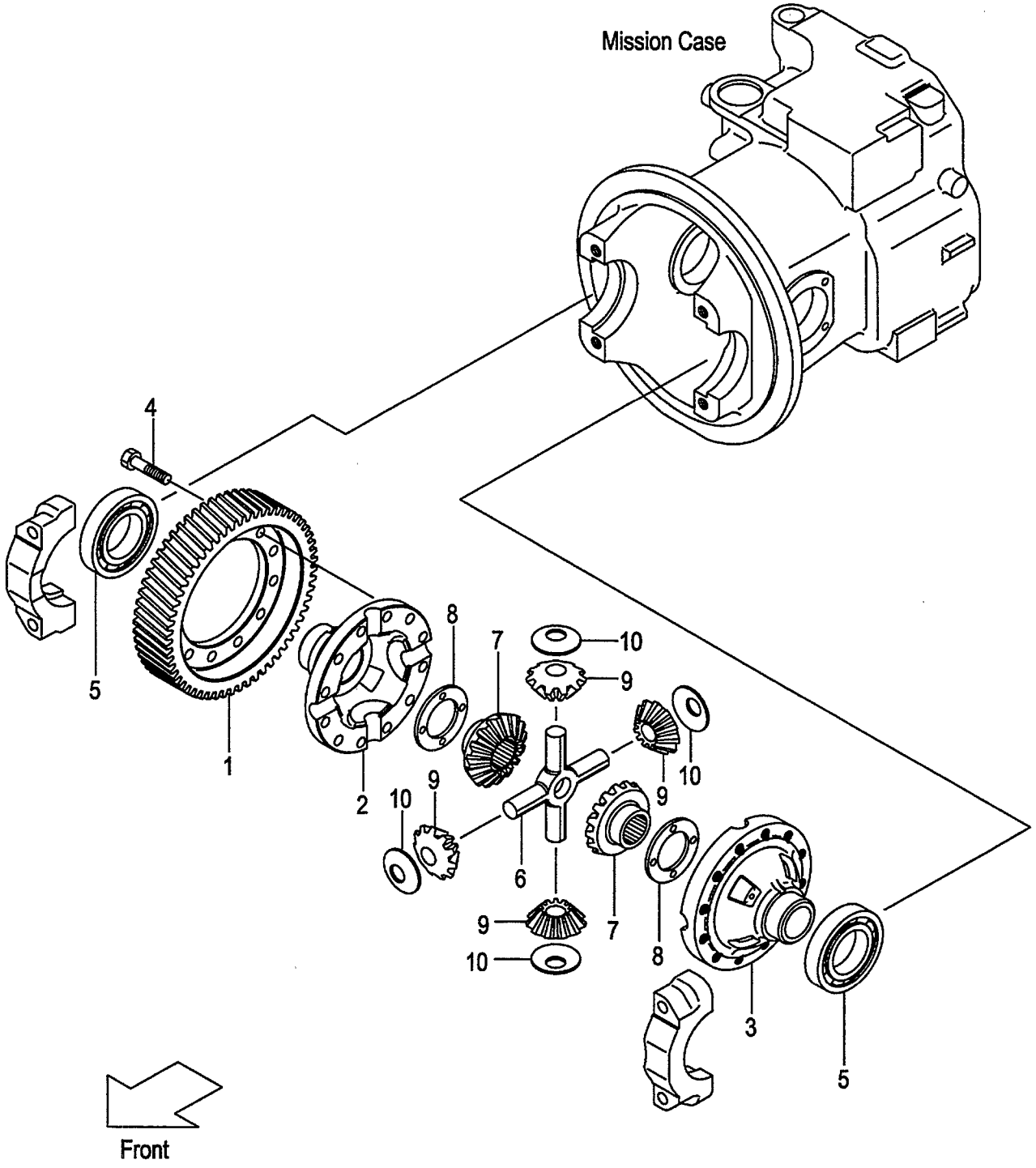

A:FD30C7
B:FD30T7
C:FD30W7

FIG.61
(F60325H0)

Item No	Part No.	Mark	Description		Req'd	Remarks : Serial No.
1	134A3-52001		GEAR,RING	ｷﾞﾔｰ	1	
A1	134A3-59801		CASE-ASSY,CROSS	ｸﾛｽｹｰｽｱｯｾﾝ	1	INC.2,3
2	NO PART NO.	#	CASE,CROSS,RH	ｹｰｽ	1	
3	NO PART NO.	#	CASE,CROSS,LH	ｹｰｽ	1	
4	134A3-52061		BOLT	ﾎﾞﾙﾄ	12	
5	03000-06213		BRG,BALL	ﾍﾞｱﾘﾝｸﾞ	2	
6	124G3-52011		SPIDER	ｽﾊﾟｲﾀﾞ	1	
7	134A3-52041		GEAR,SIDE	ｷﾞﾔｰ	2	
8	16113-52141		WASHER,THRUST,T-2.36	ﾜｯｼｬ	2	
-	14453-52071		WASHER,THRUST,T-2.2	ﾜｯｼｬ	(2)	
-	14453-52081		WASHER,THRUST,T-2.5	ﾜｯｼｬ	(2)	
9	134A3-52051		GEAR,PINION	ｷﾞﾔｰ	4	
10	16113-52121		WASHER,THRUST	ﾜｯｼｬ	4	

FIG.62 DRIVE UNIT MOUNT (OIL CLUTCH)

(F60325J0) ﾄﾞﾗｲﾌﾞﾕﾆｯﾄﾏｳﾝﾄ

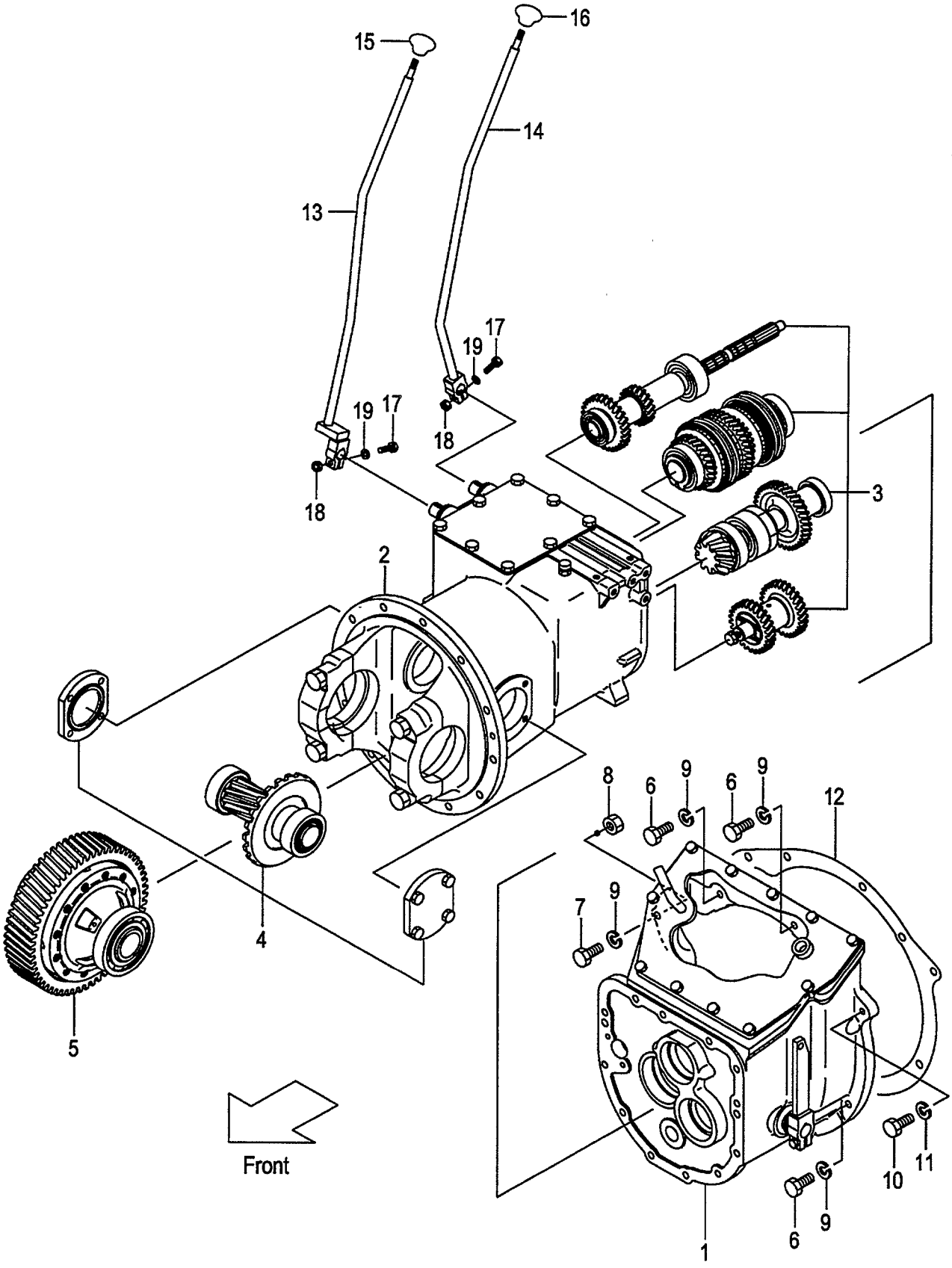

A:FD30W7

Item No	Part No.	Mark	Description		Req'd	Remarks : Serial No.
A1	136S2-50002		UNIT-ASSY,DRIVE	ﾄﾞﾗｲﾌﾞﾕﾆｯﾄｱｯｾﾝ	1	INC.1-5
1	NO PART NO.		CLUTCH	ｸﾗｯﾁ	1	SEE FIG.63
2	NO PART NO.		CASE,T/M	ｹｰｽ	1	SEE FIG.52
3	NO PART NO.		GEAR,T/M	ｷﾞﾔｰ	1	SEE FIG.53
4	NO PART NO.		REDUCTION	ﾘﾀﾞｸｼｮﾝ	1	SEE FIG.60
5	NO PART NO.		DIFFERENTIAL	ﾃﾞﾌｧﾚﾝｼｬﾙ	1	SEE FIG.61
6	01103-10035		BOLT	ﾎﾞﾙﾄ	3	
7	01103-10050		BOLT	ﾎﾞﾙﾄ	4	
8	01400-00010		NUT	ﾅｯﾄ	4	
9	02011-00010		WASHER	ﾜｯｼｬ	7	
10	01103-08040		BOLT	ﾎﾞﾙﾄ	1	
11	02011-00008		WASHER	ﾜｯｼｬ	1	
12	242S2-52001		GASKET	ｶﾞｽｹｯﾄ	1	
13	239A2-52001		LEVER,SPEED	ﾚﾊﾞｰ	1	
-	539A2-32001		LEVER,SPEED	ﾚﾊﾞｰ	1	[LCR]
14	239A2-52061		LEVER,DIRECTION	ﾚﾊﾞｰ	1	
-	539A2-32041		LEVER,DIRECTION	ﾚﾊﾞｰ	1	[LCR]
15	214A2-52002		KNOB,SPEED	ﾉﾌﾞ	1	
16	214A2-52012		KNOB,DIRECTION	ﾉﾌﾞ	1	
17	01100-08045		BOLT	ﾎﾞﾙﾄ	2	
18	01400-00008		NUT	ﾅｯﾄ	2	
19	02010-00008		WASHER	ﾜｯｼｬ	2	

FIG.63 CLUTCH (OIL CLUTCH)

(F60325K0) クラッチ

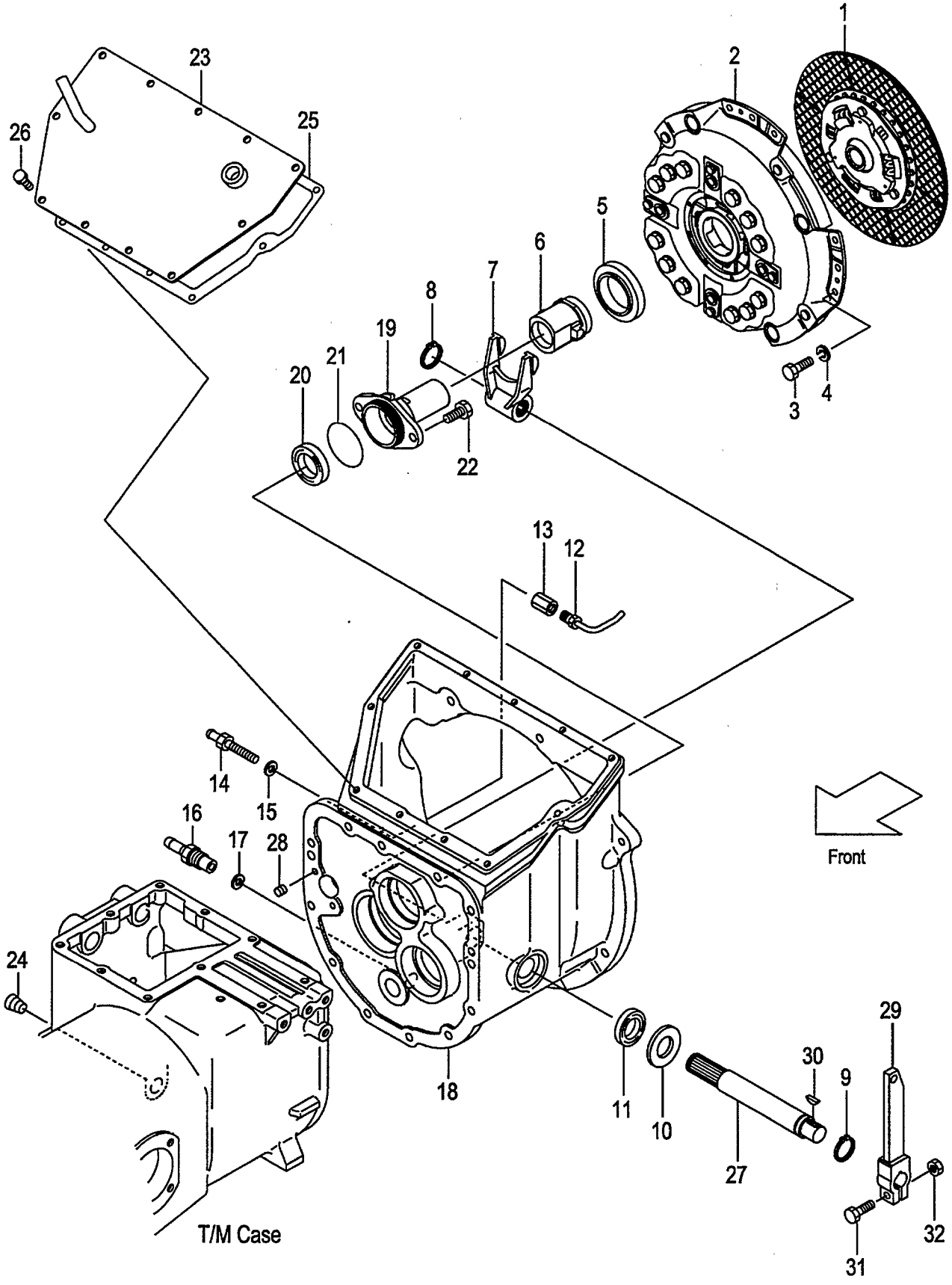

FIG.63
(F60325K0)

A:FD30W7

Item No	Part No.	Mark	Description		Req'd	Remarks : Serial No.
1	134H3-10211		DISK,CLUTCH	ﾃﾞｨｽｸ	1	
2	134H3-10201		COVER,CLUTCH	ｶﾊﾞｰ	1	
3	01103-08016		BOLT	ﾎﾞﾙﾄ	12	
4	02011-00008		WASHER	ﾜｯｼｬ	12	
5	55593-62061		BRG,THRUST	ﾍﾞｱﾘﾝｸﾞ	1	
6	134H3-12022		RETAINER,BRG	ﾘﾃｰﾅ	1	
7	114A3-12012		YOKE	ﾖｰｸ	1	
8	02100-00025		RING,SNAP	ｽﾅｯﾌﾟﾘﾝｸﾞ	1	
9	02100-00028		RING,SNAP	ｽﾅｯﾌﾟﾘﾝｸﾞ	1	
10	02000-00027		WASHER	ﾜｯｼｬ	1	
11	19502-52551		SEAL,OIL	ｼｰﾙ	1	
12	131N3-12011		NOZZLE,SPRAY	ﾉｽﾞﾙ	1	
13	131N3-12031		ADAPTER	ｱﾀﾞﾌﾟﾀ	1	
14	131N3-12041		NIPPLE	ﾆｯﾌﾟﾙ	1	
15	15943-82701		WASHER	ﾜｯｼｬ	1	
16	131N3-12151		FITTING,HOSE	ﾌｨｯﾃｨﾝｸﾞ	1	
17	22197-52091		WASHER	ﾜｯｼｬ	1	
18	142S3-12001		HOUSING,CLUTCH	ﾊｳｼﾞﾝｸﾞ	1	
19	134A3-12021		SUPPORT,RETAINER	ｻﾎﾟｰﾄ	1	
20	134H3-12011		SEAL,OIL	ｼｰﾙ	1	
21	03310-00600		O-RING	Oﾘﾝｸﾞ	1	
22	01213-10025		BOLT	ﾎﾞﾙﾄ	2	
23	131N3-12101		COVER,CLUTCH-HOUSING	ｶﾊﾞｰ	1	
24	12163-82541		PLUG	ﾌﾟﾗｸﾞ	1	
25	524G3-62121		GASKET	ｶﾞｽｹｯﾄ	1	
26	01183-08016		BOLT	ﾎﾞﾙﾄ	11	
27	114L3-12022		SHAFT	ｼｬﾌﾄ	1	
28	01066-08008		PLUG	ﾌﾟﾗｸﾞ	2	
29	114L3-12031		ARM	ｱｰﾑ	1	
30	02360-05019		KEY	ｷｰ	1	
31	01183-08035		BOLT	ﾎﾞﾙﾄ	1	
32	01400-00008		NUT	ﾅｯﾄ	1	

FIG.64 DRIVE AXLE
(F6033010) ﾄﾞﾗｲﾌﾞｱｸｽﾙ

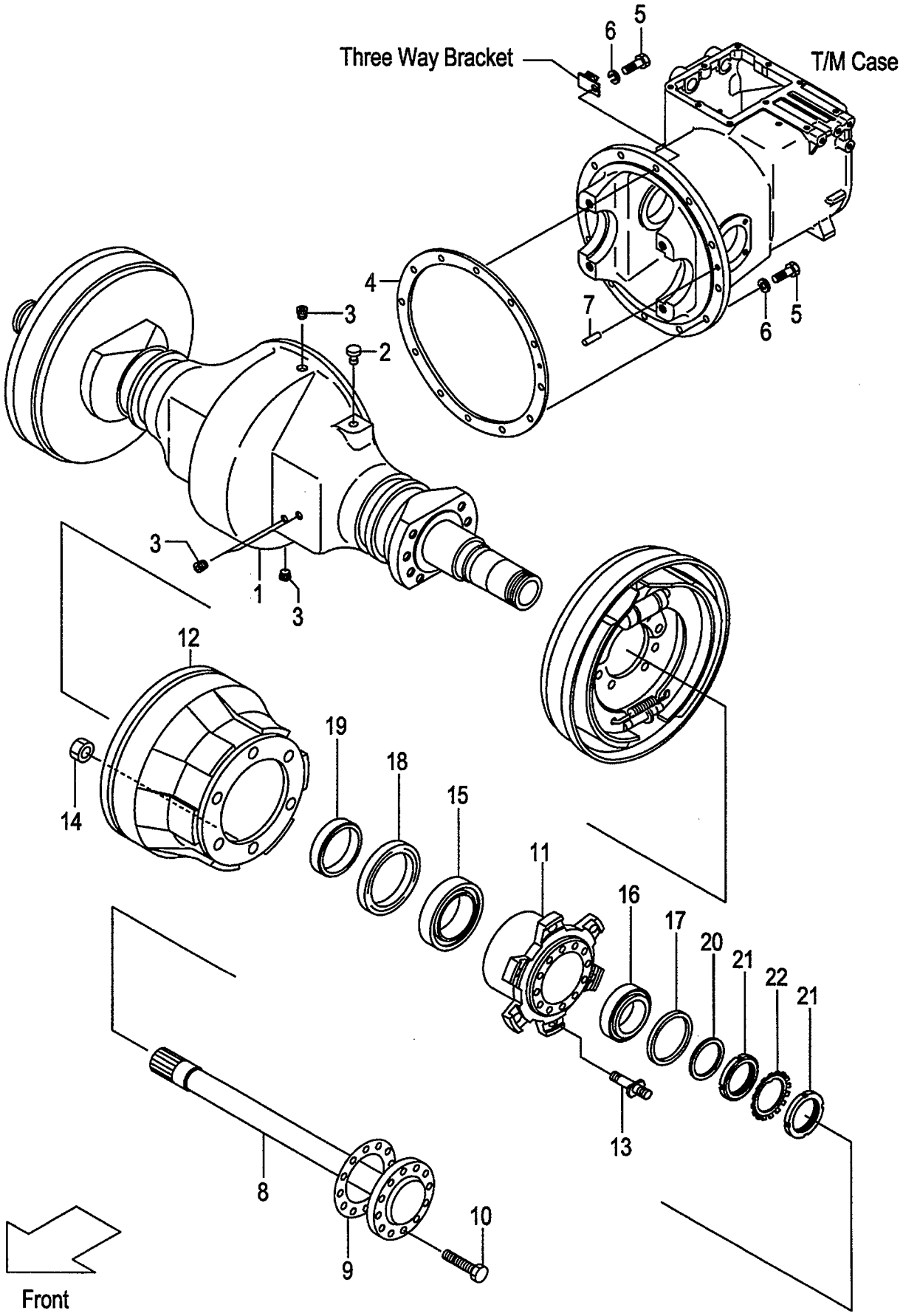

A:FD30C7 FD30T7 FD30W7

Item No	Part No.	Mark	Description		Req'd	Remarks : Serial No.
1	214J3-00302		HOUSING,AXLE	ﾊｳｼﾞﾝｸﾞ	1	
-	534F7-52012		HOUSING,AXLE	ﾊｳｼﾞﾝｸﾞ	1	[SM][SAS]
2	15573-42151		BREATHER,AIR	ﾌﾞﾘｰｻﾞ	1	
3	22193-03001		PLUG	ﾌﾟﾗｸﾞ	4	
4	24452-52002		PACKING	ﾊﾟｯｷﾝｸﾞ	1	
5	01106-12040		BOLT	ﾎﾞﾙﾄ	12	
6	02011-00012		WASHER	ﾜｯｼｬ	12	
7	02212-10020		PIN,PARALLEL	ﾋﾟﾝ	1	
8	214J3-02011		SHAFT,DRIVE	ｼｬﾌﾄ	2	
9	24453-02102		PACKING	ﾊﾟｯｷﾝｸﾞ	2	
10	24453-02061		BOLT,REAMER	ﾎﾞﾙﾄ	24	
11	24453-02031		HUB,FRONT	ﾊﾌﾞ	2	
12	24453-02131		DRUM,BRAKE	ﾄﾞﾗﾑ	2	
13	25303-02102		BOLT,HUB	ﾎﾞﾙﾄ	12	
14	01400-10020		NUT	ﾅｯﾄ	12	
15	03071-30214		BRG,TAPER-ROLLER	ﾍﾞｱﾘﾝｸﾞ	2	
16	23453-02071		BRG,TAPER-ROLLER	ﾍﾞｱﾘﾝｸﾞ	2	INC.17
17	23453-02131		SEAL,OIL	ｼｰﾙ	2	
18	23653-02001		SEAL,OIL	ｼｰﾙ	2	
19	234G3-02001		RETAINER	ﾘﾃｰﾅ	2	
20	23453-02091		WASHER	ﾜｯｼｬ	2	
21	03192-00012		NUT,BRG	ﾅｯﾄ	4	
22	03192-10012		WASHER,BRG	ﾜｯｼｬ	2	

FIG.65 WHEEL BRAKE

(F6033710) ホイールブレーキ

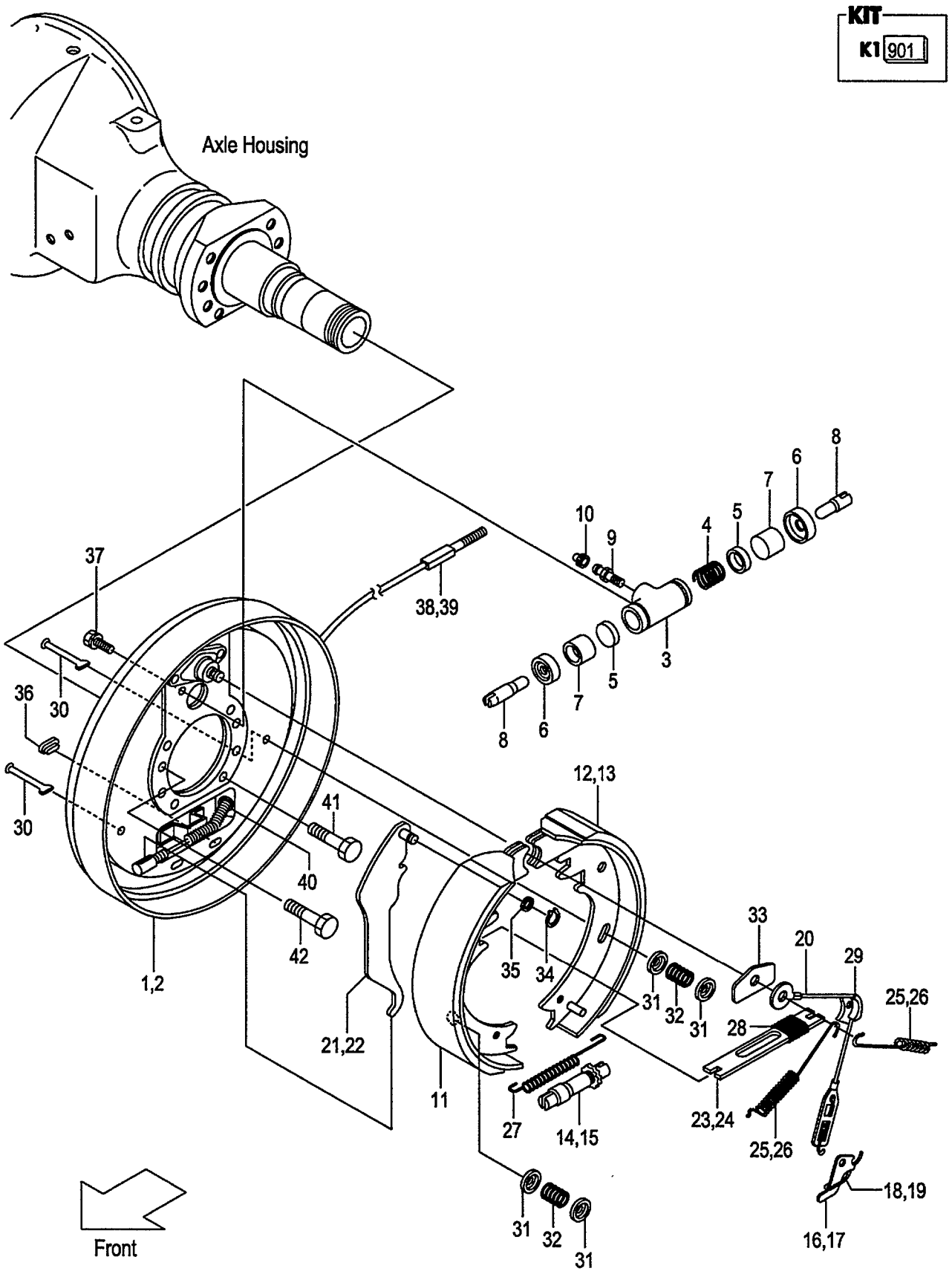

A:FD30C7 FD30T7 FD30W7

Item No	Part No.	Mark	Description		Req'd	Remarks : Serial No.
A1	522Q2-60502		BRAKE-ASSY,RH	ﾌﾞﾚｰｷｱｯｾﾝ	1	INC.1,3-12,14,16,18,20,21, 23,25,27-38,40
A2	522Q2-60512		BRAKE-ASSY,LH	ﾌﾞﾚｰｷｱｯｾﾝ	1	INC.2-11,13,15,17,19,20,22, 24,26-37,39,40
A3	C-52-11277-20000-05		BRAKE-SUB-ASSY,RH	ﾌﾞﾚｰｷｻﾌﾞｱｯｾﾝ	1	INC.1,3-12,14,16,18,20,21, 23,25,27-37
A4	C-52-11277-10000-05		BRAKE-SUB-ASSY,LH	ﾌﾞﾚｰｷｻﾌﾞｱｯｾﾝ	1	INC.2-11,13,15,17,19,20,22, 24,26-37
1	C-52-11246-21000		PLATE,BACK,RH	ﾌﾟﾚｰﾄ	1	
2	C-52-11246-11000		PLATE,BACK,LH	ﾌﾟﾚｰﾄ	1	
A5	C-52-11246-52001		CYL-ASSY,WHEEL	ﾎｲｰﾙｼﾘﾝﾀﾞｱｯｾﾝ	2	INC.3-10
901	C-K2-11242-52000	K1	KIT,WHEEL-CYL	ﾎｲｰﾙｼﾘﾝﾀﾞｷｯﾄ	1	INC.4-6
3	NO PART NO.	#	BODY,WHEEL-CYL	ﾎﾞﾃﾞｨ	2	
4	NO PART NO.	#*	SPRING	ｽﾌﾟﾘﾝｸﾞ	2	
5	NO PART NO.	#*	CUP	ｶｯﾌﾟ	4	
6	NO PART NO.	#*	BOOT	ﾌﾞｰﾂ	4	
7	NO PART NO.	#	PISTON	ﾋﾟｽﾄﾝ	4	
8	C-52-11242-52380		LINK,CONNECTING	ﾘﾝｸ	4	
9	C-52-11239-52320		SCREW,BLEEDER	ｽｸﾘｭ	2	
10	C-52-30780-02340		CAP,BLEEDER-SCREW	ｷｬｯﾌﾟ	2	
11	C-52-11246-73009		SHOE & LINING	ｼｭｰ&ﾗｲﾆﾝｸﾞ	2	
12	C-52-11246-83028		SHOE & LINING,RH	ｼｭｰ&ﾗｲﾆﾝｸﾞ	1	
13	C-52-11246-83018		SHOE & LINING,LH	ｼｭｰ&ﾗｲﾆﾝｸﾞ	1	
14	C-52-11242-23300		ADJUSTER,RH	ｱｼﾞｬｽﾀ	1	
15	C-52-11242-13300		ADJUSTER,LH	ｱｼﾞｬｽﾀ	1	
16	C-52-11218-25151		LEVER,RH	ﾚﾊﾞｰ	1	
17	C-52-11218-15151		LEVER,LH	ﾚﾊﾞｰ	1	
18	C-52-11218-25161		SPRING,RH	ｽﾌﾟﾘﾝｸﾞ	1	
19	C-52-11218-15161		SPRING,LH	ｽﾌﾟﾘﾝｸﾞ	1	
20	20803-71101		SPRING & CABLE	ｽﾌﾟﾘﾝｸﾞ&ｹｰﾌﾞﾙ	2	
21	C-52-11242-24500		LEVER,PARKING,RH	ﾚﾊﾞｰ	1	
22	C-52-11242-14500		LEVER,PARKING,LH	ﾚﾊﾞｰ	1	
23	C-52-11242-24530		STRUT,RH	ｽﾄﾗｯﾄ	1	
24	C-52-11242-14530		STRUT,LH	ｽﾄﾗｯﾄ	1	
25	C-52-11242-54011		SPRING,RH	ｽﾌﾟﾘﾝｸﾞ	2	
26	C-52-11242-54010		SPRING,LH	ｽﾌﾟﾘﾝｸﾞ	2	
27	C-52-11246-54071		SPRING	ｽﾌﾟﾘﾝｸﾞ	2	
28	C-52-11232-54540		SPRING	ｽﾌﾟﾘﾝｸﾞ	2	
29	C-52-11003-05143		GUIDE,CABLE	ｶﾞｲﾄﾞ	2	
30	C-52-51308-54160		PIN,SHOE-HOLD	ﾋﾟﾝ	4	
31	C-52-51302-53840		CUP,SHOE-HOLD	ｶｯﾌﾟ	8	
32	C-52-11105-54110		SPRING,SHOE-HOLD	ｽﾌﾟﾘﾝｸﾞ	4	
33	C-52-11239-51270		PLATE,SHOE-GUIDE	ﾌﾟﾚｰﾄ	2	
34	C-52-10901-64560		RETAINER	ﾘﾃｰﾅ	2	
35	C-52-10901-64550		WASHER,WAVE	ﾜｯｼｬ	2	
36	C-52-11204-69010		COVER	ｶﾊﾞｰ	2	
37	C-90-0567-0822		BOLT	ﾎﾞﾙﾄ	4	
38	20803-71031		CABLE,PARKING,RH	ｹｰﾌﾞﾙ	1	
39	20803-71041		CABLE,PARKING,LH	ｹｰﾌﾞﾙ	1	
40	C-90-9200-0800		E-RING	Eﾘﾝｸﾞ	2	

FIG.65 WHEEL BRAKE

(F6033710) ホイールブレーキ

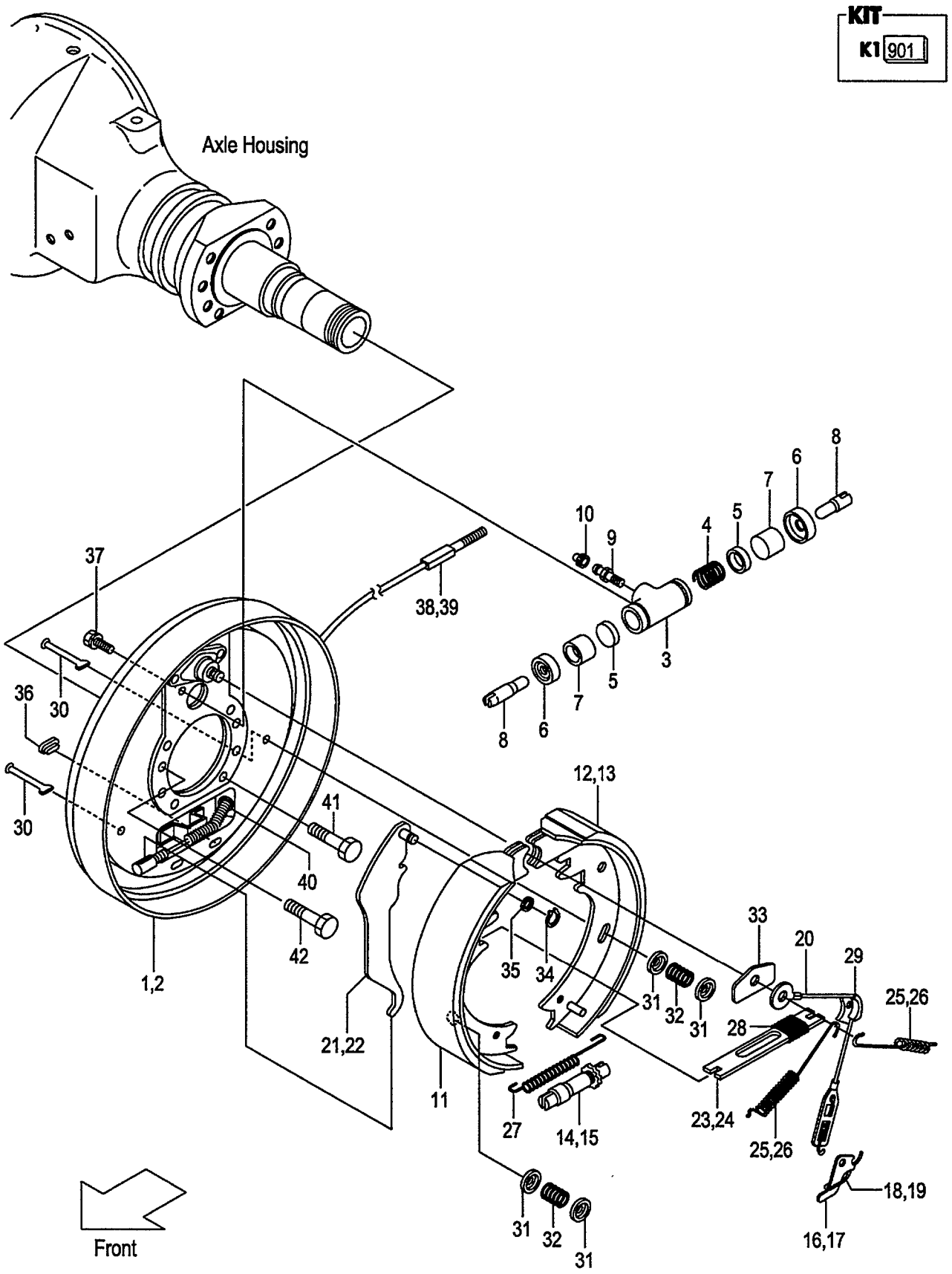

FIG.65
(F6033710)

A:FD30C7 FD30T7 FD30W7

Item No	Part No.	Mark	Description	Req'd	Remarks : Serial No.
41	214A3-02001		BOLT ﾎﾞﾙﾄ	12	
42	25953-72001		BOLT,DISC ﾎﾞﾙﾄ	4	

FIG.66 STEERING WHEEL UNIT

(F6034110) ステアリング゛ホイールユニット

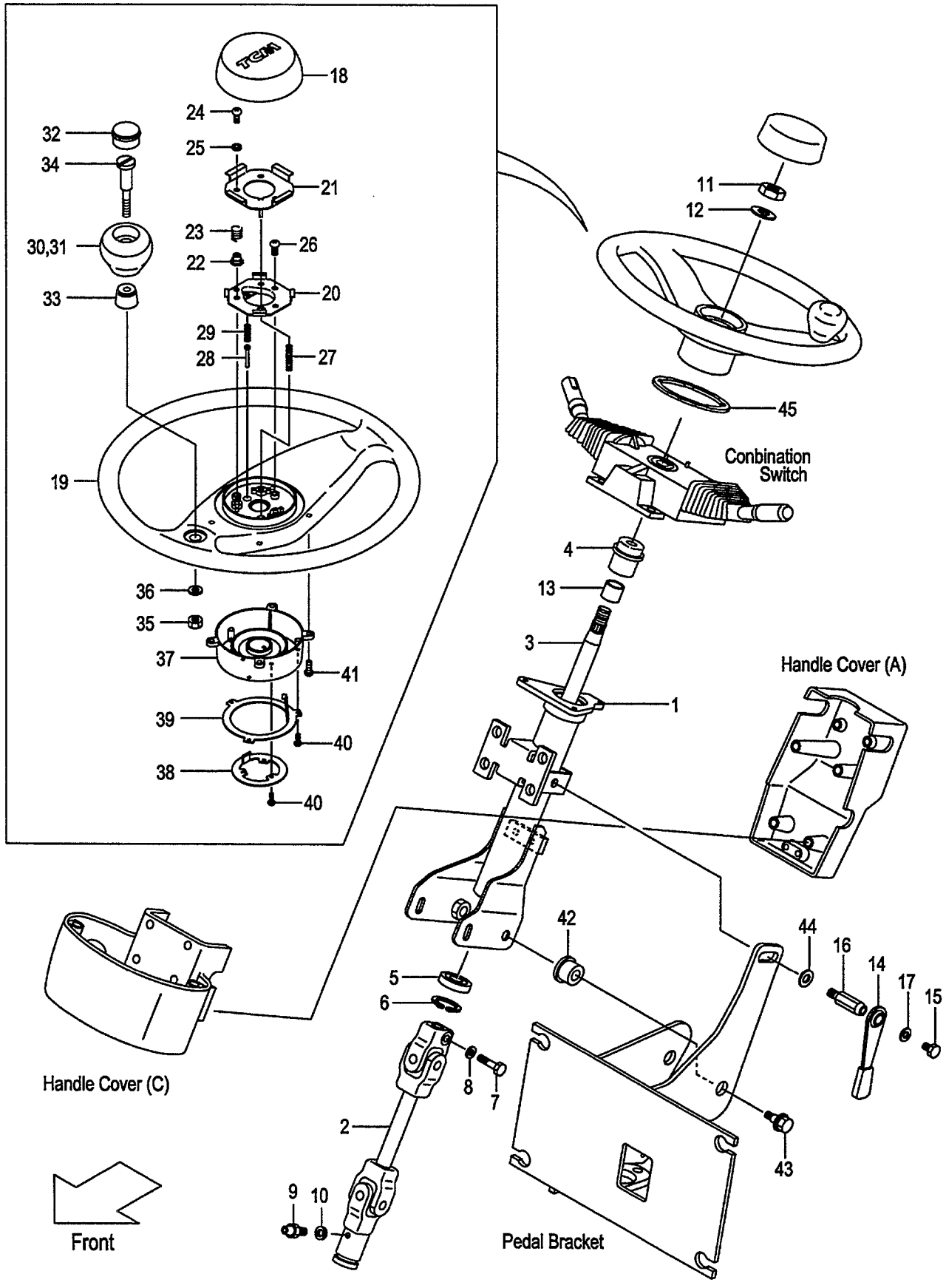

A:FD30C7 FD30T7 FD30W7

Item No	Part No.	Mark	Description		Req'd	Remarks : Serial No.
A1	239A4-12102		SHAFT-ASSY,STEERING	ｽﾃｱﾘﾝｸﾞｼｬﾌﾄｱｯｾﾝ	1	INC.1-13
1	239A4-12112		COLUMN	ｺﾗﾑ	1	
2	239A4-12121		JOINT,UNIVERSAL	ｼﾞｮｲﾝﾄ	1	
3	239A4-12131		SHAFT	ｼｬﾌﾄ	1	
4	NO PART NO.		BUSHING,COLUMN	ﾌﾞｯｼﾝｸﾞ	1	
5	NO PART NO.		BRG,BALL	ﾍﾞｱﾘﾝｸﾞ	1	
6	NO PART NO.		RING,SNAP	ｽﾅｯﾌﾟﾘﾝｸﾞ	1	
7	NO PART NO.		BOLT	ﾎﾞﾙﾄ	1	
8	NO PART NO.		WASHER	ﾜｯｼｬ	1	
9	NO PART NO.		FITTING	ﾌｨｯﾃｨﾝｸﾞ	1	
10	NO PART NO.		WASHER	ﾜｯｼｬ	1	
11	01402-00014		NUT	ﾅｯﾄ	1	
12	14354-12271		WASHER	ﾜｯｼｬ	1	
13	NO PART NO.		BUSHING,DU	ﾌﾞｯｼﾝｸﾞ	1	
A2	239A4-12402		LEVER-ASSY,TILT-LOCK	ﾃｨﾙﾄﾛｯｸﾚﾊﾞｰｱｯｾﾝ	1	INC.14-17
14	239A4-12411		LEVER	ﾚﾊﾞｰ	1	
15	239A4-12441		BOLT	ﾎﾞﾙﾄ	1	
16	239A4-12431		BOLT,LOCK	ﾎﾞﾙﾄ	1	
17	214A4-12161		WASHER	ﾜｯｼｬ	1	
A3	209K4-10801		WHEEL-ASSY,STEERING	ｽﾃｱﾘﾝｸﾞﾎｲｰﾙｱｯｾﾝ	1	INC.18-41
18	216G4-12761		PAD,HORN	ﾊﾟｯﾄﾞ	1	
19	209K4-12561		WHEEL,STEERING	ﾎｲｰﾙ	1	
A4	271F4-12221		SWITCH-ASSY	ｽｲｯﾁｱｯｾﾝ	1	INC.20-25
20	NO PART NO.	#	PLATE,CONTACT,A	ﾌﾟﾚｰﾄ	1	
21	NO PART NO.	#	PLATE,CONTACT,B	ﾌﾟﾚｰﾄ	1	
22	216G4-12601		INSULATOR	ｲﾝｼｭﾚｰﾀ	3	
23	216G4-12611		SPRING,HORN	ｽﾌﾟﾘﾝｸﾞ	3	
24	216G4-12621		SCREW	ｽｸﾘｭ	3	
25	216G4-12631		WASHER,FIVER	ﾜｯｼｬ	3	
26	216G4-12641		SCREW	ｽｸﾘｭ	2	
27	216G4-12661		SPRING,EARTH	ｽﾌﾟﾘﾝｸﾞ	1	
28	271F4-12231		PLUNGER	ﾌﾟﾗﾝｼﾞｬ	1	
29	271F4-12241		SPRING,PLUNGER	ｽﾌﾟﾘﾝｸﾞ	1	
A5	216G4-12681		KNOB-ASSY	ﾉﾌﾞｱｯｾﾝ	1	INC.30-36
30	NO PART NO.	#	KNOB	ﾉﾌﾞ	1	
31	NO PART NO.	#	INSERT,KNOB	ｲﾝｻｰﾄ	1	
32	216G4-12711		CAP	ｷｬｯﾌﾟ	1	
33	NO PART NO.	#	BUSHING	ﾌﾞｯｼﾝｸﾞ	1	
34	NO PART NO.	#	SHAFT	ｼｬﾌﾄ	1	
35	216G4-12741		NUT	ﾅｯﾄ	1	
36	216G4-12751		WASHER	ﾜｯｼｬ	1	
37	209K4-12541		COVER,CANCEL-CAM	ｶﾊﾞｰ	1	
38	209K4-12531		RING,CONTACT,A	ﾘﾝｸﾞ	1	
39	209K4-12521		RING,CONTACT,B	ﾘﾝｸﾞ	1	
40	209K4-12511		SCREW	ｽｸﾘｭ	6	
41	209K4-12501		SCREW	ｽｸﾘｭ	4	
42	216G4-12101		BUSHING	ﾌﾞｯｼﾝｸﾞ	2	
43	216G4-12111		BOLT	ﾎﾞﾙﾄ	2	
44	02000-00012		WASHER	ﾜｯｼｬ	1	
45	209P4-12111		RUBBER,HANDLE-WHEEL	ﾗﾊﾞｰ	1	

FIG.67 GEAR BOX

(F6034120) ｷﾞﾔｰﾎﾞｯｸｽ

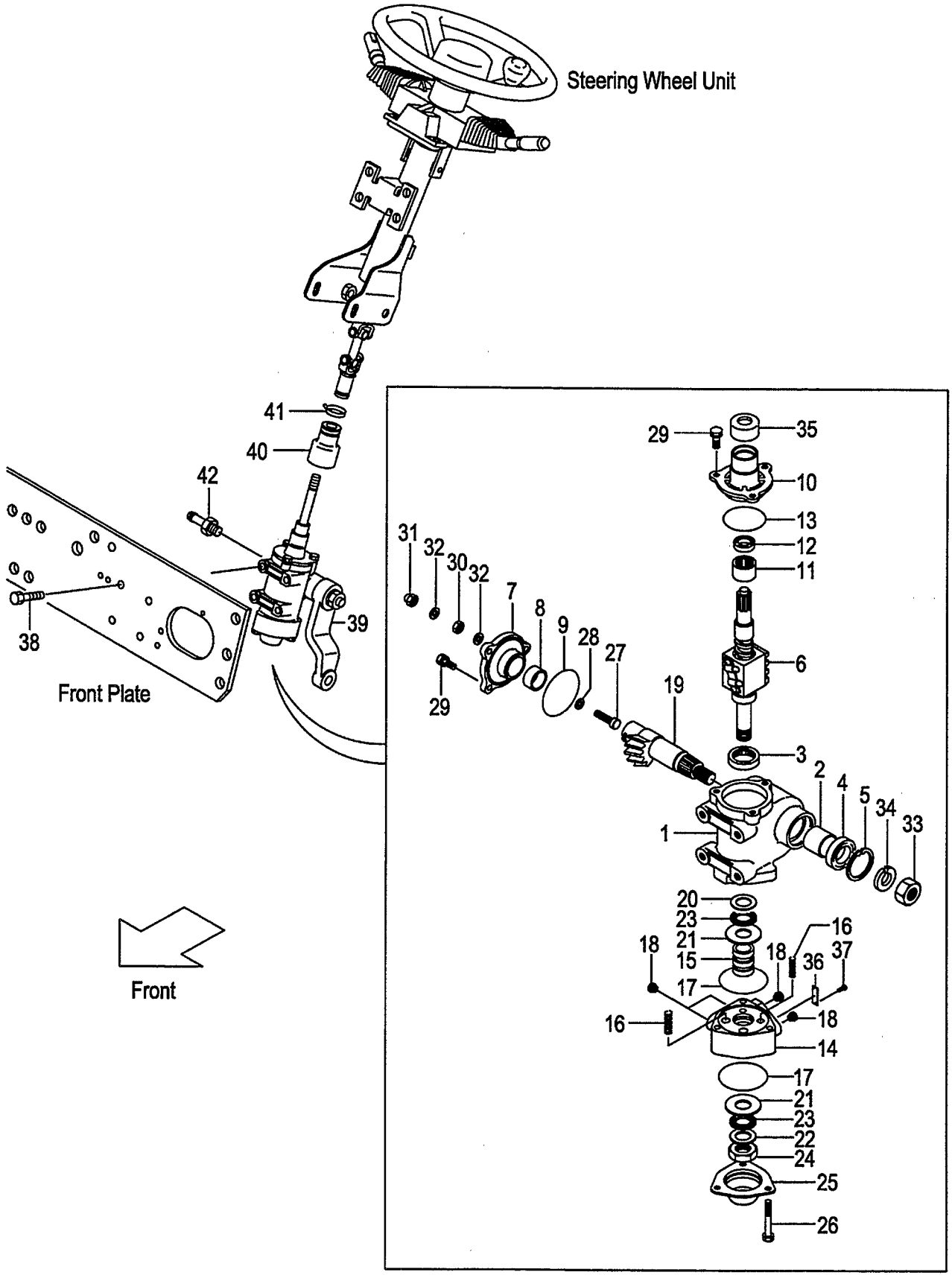

A:FD30C7 FD30T7 FD30W7

Item No	Part No.	Mark	Description		Req'd	Remarks : Serial No.
A1	239A4-12201		BOX-ASSY,GEAR	ｷﾞﾔｰﾎﾞｯｸｽｱｯｾﾝ	1	INC.1-37
A2	B-23643-00526		CASE-ASSY,GEAR	ｷﾞﾔｰｹｰｽｱｯｾﾝ	1	INC.1-5
1	NO PART NO.	#	CASE,GEAR	ｹｰｽ	1	
2	B-23641-03716		BUSHING	ﾌﾞｯｼﾝｸﾞ	1	
3	B-23451-02016		BRG,RADIAL	ﾍﾞｱﾘﾝｸﾞ	1	
4	B-23711-01922		SEAL,OIL	ｼｰﾙ	1	
5	B-94721-38151		RING,SNAP	ｽﾅｯﾌﾟﾘﾝｸﾞ	1	
6	B-B3613-13001		SCREW,BALL	ｽｸﾘｭ	1	
A3	B-23642-00911		COVER-ASSY,SIDE	ｶﾊﾞｰｱｯｾﾝ	1	INC.7-9
7	NO PART NO.	#	COVER,SIDE	ｶﾊﾞｰ	1	
8	B-23641-03716		BUSHING	ﾌﾞｯｼﾝｸﾞ	1	
9	B-95121-06000		O-RING	Oﾘﾝｸﾞ	1	
A4	B-23643-00618		COVER-ASSY,TOP	ﾄｯﾌﾟｶﾊﾞｰｱｯｾﾝ	1	INC.10-13
10	NO PART NO.	#	COVER,TOP	ｶﾊﾞｰ	1	
11	NO PART NO.	#	BRG,RADIAL	ﾍﾞｱﾘﾝｸﾞ	1	
12	NO PART NO.	#	SEAL,OIL	ｼｰﾙ	1	
13	B-95121-06000		O-RING	Oﾘﾝｸﾞ	1	
A5	B-23643-00296		HOUSING-ASSY,VALAE	ﾊﾞﾙﾌﾞﾊｳｼﾞﾝｸﾞｱｯｾﾝ	1	INC.14-18
14	NO PART NO.	#	HOUSING,VALVE	ﾊｳｼﾞﾝｸﾞ	1	
15	NO PART NO.	#	SPOOL	ｽﾌﾟｰﾙ	1	
16	14354-12321		SPRING	ｽﾌﾟﾘﾝｸﾞ	4	
17	B-95151-06300		O-RING	Oﾘﾝｸﾞ	2	
18	25594-52141		FERRULE	ﾌｪﾙｰﾙ	4	
19	B-23641-00313		SHAFT,SECTOR	ｼｬﾌﾄ	1	
20	B-23641-01609		RACE,THRUST	ﾚｰｽ	1	
21	B-23641-01610		RACE,THRUST	ﾚｰｽ	2	
22	B-23451-02212		RACE,THRUST	ﾚｰｽ	1	
23	B-23451-02106		BRG,THRUST	ﾍﾞｱﾘﾝｸﾞ	2	
24	B-23641-02227		NUT	ﾅｯﾄ	1	
25	B-23641-02508		COVER,END	ｶﾊﾞｰ	1	
26	B-23641-03314		BOLT	ﾎﾞﾙﾄ	3	
27	14354-12211		SCREW,ADJUST	ｽｸﾘｭ	1	
28	14354-12221		SHIM,ADJUST-SCREW	ｼﾑ	1	
29	B-23711-03701		BOLT	ﾎﾞﾙﾄ	6	
30	01402-10010		NUT	ﾅｯﾄ	1	
31	14354-12261		NUT,CAP	ﾅｯﾄ	1	
32	14354-12251		PACKING	ﾊﾟｯｷﾝｸﾞ	2	
33	B-23641-02218		NUT	ﾅｯﾄ	1	
34	B-94101-20512		WASHER	ﾜｯｼｬ	1	
35	B-23641-04303		COVER,DUST	ｶﾊﾞｰ	1	
36	NO PART NO.	#	PLATE,NAME	ﾌﾟﾚｰﾄ	1	
37	NO PART NO.	#	SCREW,DRIVE	ｽｸﾘｭ	2	
38	01184-12030		BOLT	ﾎﾞﾙﾄ	4	
39	239A4-22001		ARM,PITMAN	ｱｰﾑ	1	
40	239A4-12211		BOOT,GEAR-BOX	ﾌﾞｰﾂ	1	
41	04913-11200		BAND	ﾊﾞﾝﾄﾞ	1	
42	25597-62211		NIPPLE	ﾆｯﾌﾟﾙ	1	

FIG.68 ORBITROL [EXC][EXE][EXK][EXN][OBT]

(F6034130) オービットロール

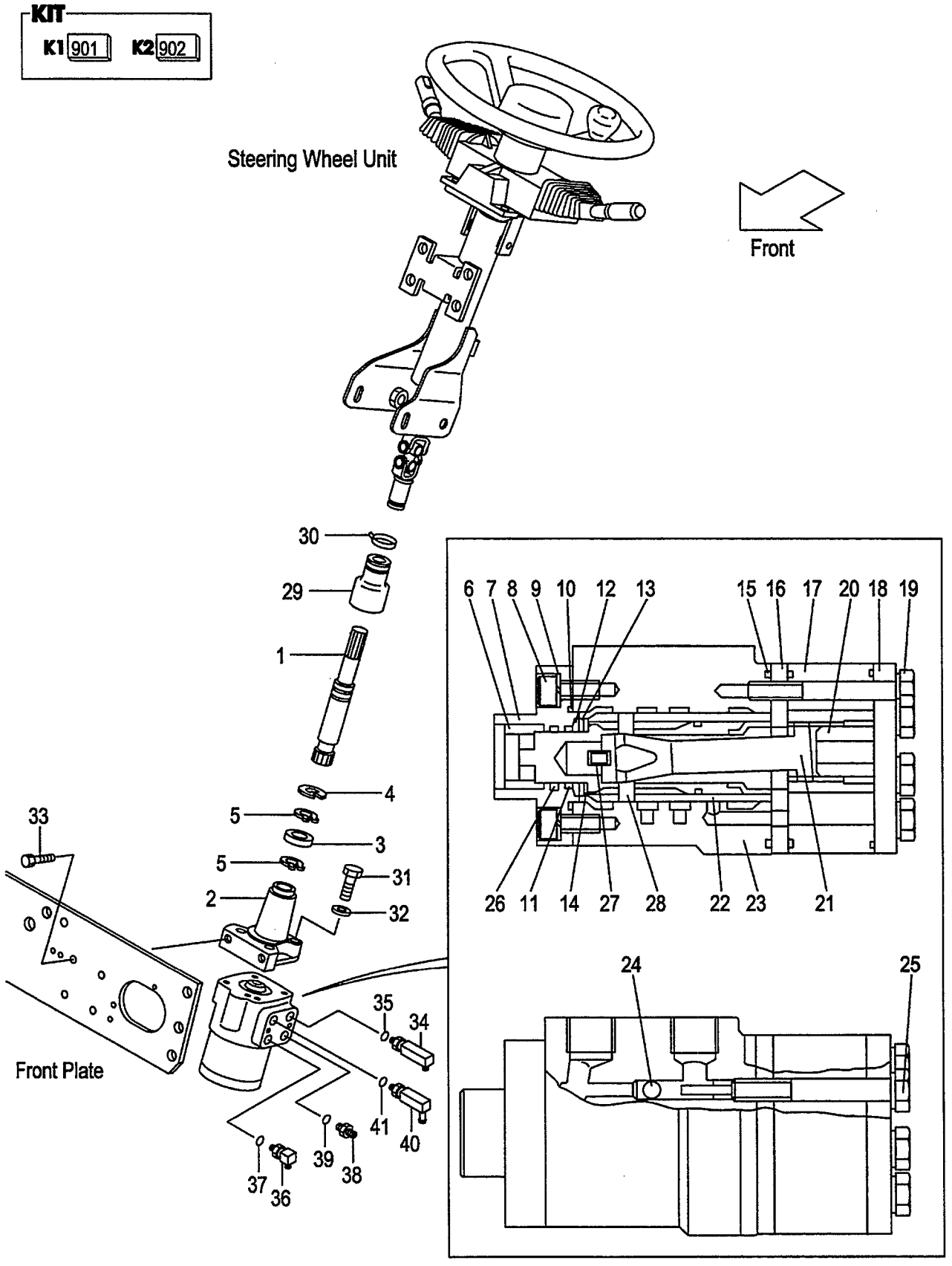

FIG.68
(F6034130)

A:FD30C7 FD30T7

Item No	Part No.	Mark	Description		Req'd	Remarks : Serial No.
1	539A2-42001		SHAFT,HANDLE	ｼｬﾌﾄ	1	[EXC][EXE][EXK][EXN][OBT] [EXB/OBT]
2	539A2-42011		FLANGE	ﾌﾗﾝｼﾞ	1	[EXC][EXE][EXK][EXN][OBT] [EXB/OBT]
3	03010-06904		BRG,BALL	ﾍﾞｱﾘﾝｸﾞ	1	[EXC][EXE][EXK][EXN][OBT] [EXB/OBT]
4	02110-00037		RING,SNAP	ｽﾅｯﾌﾟﾘﾝｸﾞ	1	[EXC][EXE][EXK][EXN][OBT] [EXB/OBT]
5	02100-00020		RING,SNAP	ｽﾅｯﾌﾟﾘﾝｸﾞ	2	[EXC][EXE][EXK][EXN][OBT] [EXB/OBT]
A1	HC32G4-10101		UNIT-ASSY,ORBITROL	ｵｰﾋﾞｯﾄﾛｰﾙﾕﾆｯﾄｱｯｾﾝ	1	[EXC][EXE][EXK][EXN][OBT] [EXB/OBT] INC.6-28
901	HC516G2-42411	K1	KIT,SEAL	ｼｰﾙｷｯﾄ	1	[EXC][EXE][EXK][EXN][OBT] [EXB/OBT] INC.10,11,15,26
902	HC26094-17021	K2	KIT,BRG,NEEDLE	ﾆｰﾄﾞﾙﾍﾞｱﾘﾝｸﾞｷｯﾄ	1	[EXC][EXE][EXK][EXN][OBT] [EXB/OBT] INC.12-14
6	NO PART NO.	#	BUSHING	ﾌﾞｯｼﾝｸﾞ	1	[EXC][EXE][EXK][EXN][OBT] [EXB/OBT]
7	NO PART NO.	#	CAP,FRONT	ｷｬｯﾌﾟ	1	[EXC][EXE][EXK][EXN][OBT] [EXB/OBT]
8	NO PART NO.	#	BOLT	ﾎﾞﾙﾄ	4	[EXC][EXE][EXK][EXN][OBT] [EXB/OBT]
9	NO PART NO.	#	WASHER	ﾜｯｼｬ	4	[EXC][EXE][EXK][EXN][OBT] [EXB/OBT]
10	NO PART NO.	#*	O-RING	Oﾘﾝｸﾞ	1	[EXC][EXE][EXK][EXN][OBT] [EXB/OBT]
11	NO PART NO.	#*	SEAL,OIL	ｼｰﾙ	1	[EXC][EXE][EXK][EXN][OBT] [EXB/OBT]
12	NO PART NO.	#*	RACE,BRG	ﾚｰｽ	1	[EXC][EXE][EXK][EXN][OBT] [EXB/OBT]
13	NO PART NO.	#*	BRG,NEEDLE	ﾍﾞｱﾘﾝｸﾞ	1	[EXC][EXE][EXK][EXN][OBT] [EXB/OBT]
14	NO PART NO.	#*	RACE,BRG	ﾚｰｽ	1	[EXC][EXE][EXK][EXN][OBT] [EXB/OBT]
15	NO PART NO.	#*	O-RING	Oﾘﾝｸﾞ	1	[EXC][EXE][EXK][EXN][OBT] [EXB/OBT]
16	NO PART NO.	#	SPACER	ｽﾍﾟｰｻ	1	[EXC][EXE][EXK][EXN][OBT] [EXB/OBT]
17	NO PART NO.	#	GEROTOR	ｼﾞﾛｰﾀ	1	[EXC][EXE][EXK][EXN][OBT] [EXB/OBT]
18	NO PART NO.	#	CAP,END	ｷｬｯﾌﾟ	1	[EXC][EXE][EXK][EXN][OBT] [EXB/OBT]
19	NO PART NO.	#	BOLT	ﾎﾞﾙﾄ	6	[EXC][EXE][EXK][EXN][OBT] [EXB/OBT]
20	NO PART NO.	#	SPACER	ｽﾍﾟｰｻ	1	[EXC][EXE][EXK][EXN][OBT] [EXB/OBT]
21	NO PART NO.	#	SHAFT,DRIVE	ｼｬﾌﾄ	1	[EXC][EXE][EXK][EXN][OBT] [EXB/OBT]
22	NO PART NO.	#	SLEEVE	ｽﾘｰﾌﾞ	1	[EXC][EXE][EXK][EXN][OBT] [EXB/OBT]

FIG.68 ORBITROL [EXC][EXE][EXK][EXN][OBT]

(F6034130) オービットロール

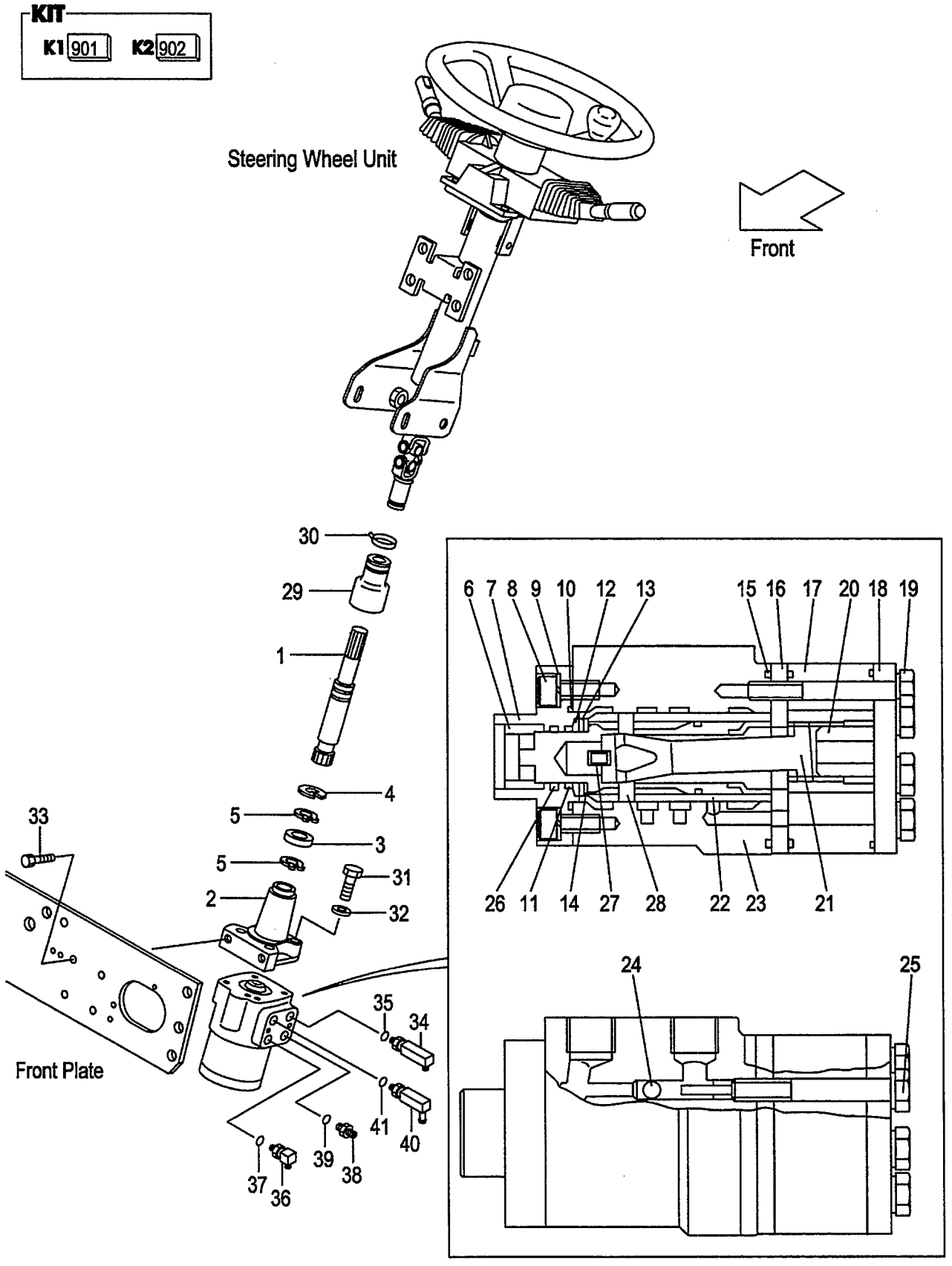

A:FD30C7 FD30T7

Item No	Part No.	Mark	Description		Req'd	Remarks : Serial No.
23	NO PART NO.	#	HOUSING	ﾊｳｼﾞﾝｸﾞ	1	[EXC][EXE][EXK][EXN][OBT] [EXB/OBT]
24	NO PART NO.	#	BALL,STEEL	ﾎﾞｰﾙ	1	[EXC][EXE][EXK][EXN][OBT] [EXB/OBT]
25	NO PART NO.	#	BOLT	ﾎﾞﾙﾄ	1	[EXC][EXE][EXK][EXN][OBT] [EXB/OBT]
26	NO PART NO.	#*	O-RING	Oﾘﾝｸﾞ	1	[EXC][EXE][EXK][EXN][OBT] [EXB/OBT]
27	NO PART NO.	#	SPRING	ｽﾌﾟﾘﾝｸﾞ	1	[EXC][EXE][EXK][EXN][OBT] [EXB/OBT]
28	NO PART NO.	#	PIN	ﾋﾟﾝ	1	[EXC][EXE][EXK][EXN][OBT] [EXB/OBT]
29	239A4-12211		BOOT,GEAR-BOX	ﾌﾞｰﾂ	1	[EXC][EXE][EXK][EXN][OBT] [EXB/OBT]
30	04913-11200		BAND	ﾊﾞﾝﾄﾞ	1	[EXC][EXE][EXK][EXN][OBT] [EXB/OBT]
31	80110-00628		BOLT	ﾎﾞﾙﾄ	4	[EXC][EXE][EXK][EXN][OBT] [EXB/OBT]
32	80430-00006		WASHER	ﾜｯｼｬ	4	[EXC][EXE][EXK][EXN][OBT] [EXB/OBT]
33	216G4-12251		BOLT	ﾎﾞﾙﾄ	2	[EXC][EXE][EXK][EXN][OBT] [EXB/OBT]
A2	23457-60301		ELBOW-ASSY	ｴﾙﾎﾞｱｯｾﾝ	1	[EXC][EXE][EXK][EXN][OBT] [EXB/OBT] INC.34,35
34	NO PART NO.	#	ELBOW	ｴﾙﾎﾞ	1	[EXC][EXE][EXK][EXN][OBT] [EXB/OBT]
35	89140-00006		O-RING	Oﾘﾝｸﾞ	1	[EXC][EXE][EXK][EXN][OBT] [EXB/OBT]
A3	23457-60311		ELBOW-ASSY	ｴﾙﾎﾞｱｯｾﾝ	1	[EXC][EXE][EXK][EXN][OBT] [EXB/OBT] INC.36,37
36	NO PART NO.	#	ELBOW	ｴﾙﾎﾞ	1	[EXC][EXE][EXK][EXN][OBT] [EXB/OBT]
37	89140-00006		O-RING	Oﾘﾝｸﾞ	1	[EXC][EXE][EXK][EXN][OBT] [EXB/OBT]
A4	22197-60231		NIPPLE-ASSY	ﾆｯﾌﾟﾙｱｯｾﾝ	1	[EXC][EXE][EXK][EXN][OBT] [EXB/OBT] INC.38,39
38	NO PART NO.	#	NIPPLE	ﾆｯﾌﾟﾙ	1	[EXC][EXE][EXK][EXN][OBT] [EXB/OBT]
39	89140-00006		O-RING	Oﾘﾝｸﾞ	1	[EXC][EXE][EXK][EXN][OBT] [EXB/OBT]
A5	516G2-40451		ELBOW-ASSY	ｴﾙﾎﾞｱｯｾﾝ	1	[EXC][EXE][EXK][EXN][OBT] [EXB/OBT] INC.40,41
40	NO PART NO.	#	ELBOW	ｴﾙﾎﾞ	1	[EXC][EXE][EXK][EXN][OBT] [EXB/OBT]
41	89140-00006		O-RING	Oﾘﾝｸﾞ	1	[EXC][EXE][EXK][EXN][OBT] [EXB/OBT]

FIG.69 GEAR BOX [(EXC,EXE,EXK,EXN)/PSS]

(F6034140) ｷﾞﾔｰﾎﾞｯｸｽ

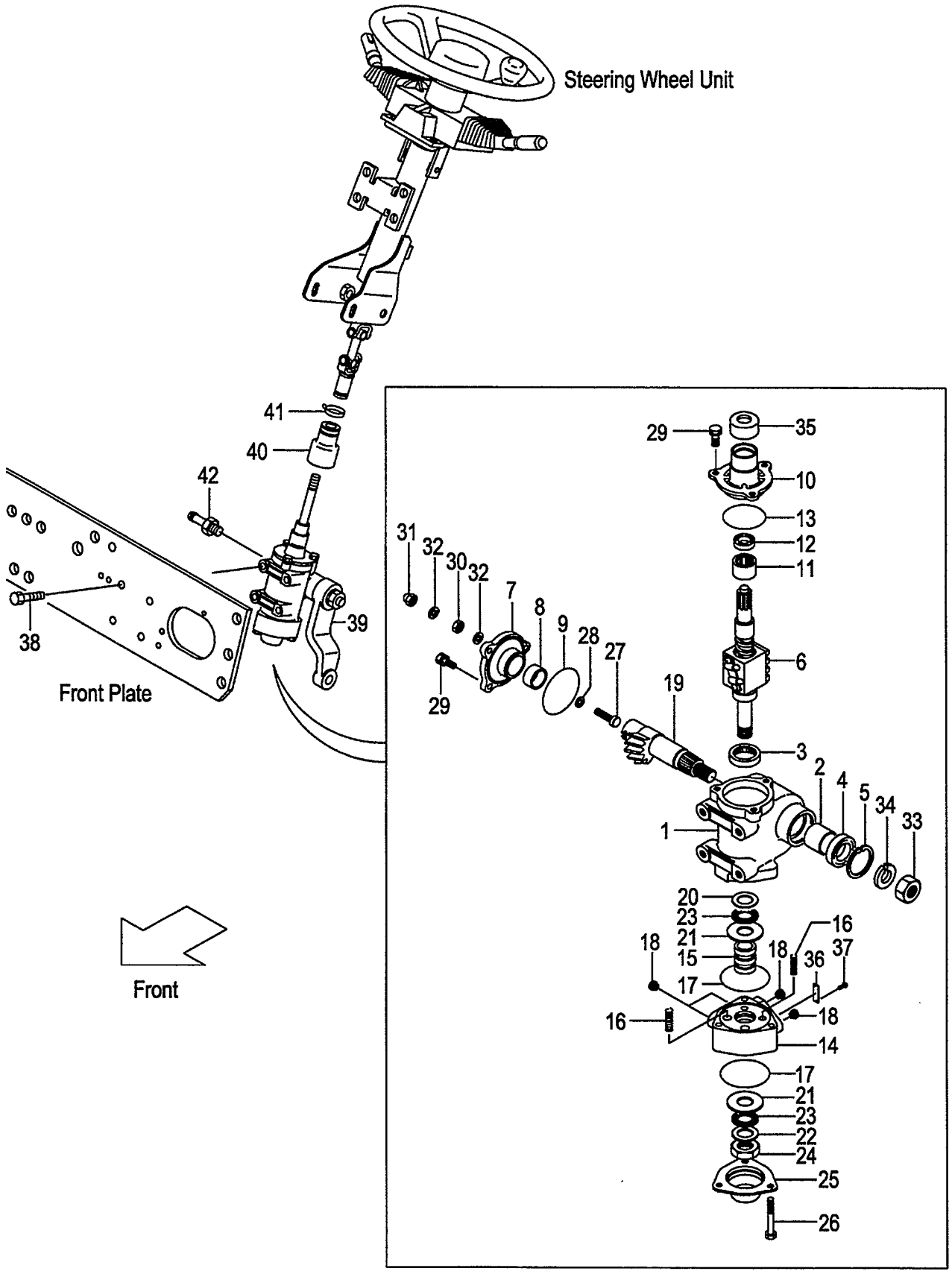

A:FD30C7 FD30T7

Item No	Part No.	Mark	Description		Req'd	Remarks : Serial No.
A1	239A4-12201		BOX-ASSY,GEAR	ｷﾞﾔｰﾎﾞｯｸｽｱｯｾﾝ	1	[EXC/PSS][EXE/PSS][EXK/PSS] [EXN/PSS] INC.1-37
A2	B-23643-00526		CASE-ASSY,GEAR	ｷﾞﾔｰｹｰｽｱｯｾﾝ	1	[EXC/PSS][EXE/PSS][EXK/PSS] [EXN/PSS] INC.1-5
1	NO PART NO.	#	CASE,GEAR	ｹｰｽ	1	[EXC/PSS][EXE/PSS][EXK/PSS] [EXN/PSS]
2	B-23641-03716		BUSHING	ﾌﾞｯｼﾝｸﾞ	1	[EXC/PSS][EXE/PSS][EXK/PSS] [EXN/PSS]
3	B-23451-02016		BRG,RADIAL	ﾍﾞｱﾘﾝｸﾞ	1	[EXC/PSS][EXE/PSS][EXK/PSS] [EXN/PSS]
4	B-23711-01922		SEAL,OIL	ｼｰﾙ	1	[EXC/PSS][EXE/PSS][EXK/PSS] [EXN/PSS]
5	B-94721-38151		RING,SNAP	ｽﾅｯﾌﾟﾘﾝｸﾞ	1	[EXC/PSS][EXE/PSS][EXK/PSS] [EXN/PSS]
6	B-B3613-13001		SCREW,BALL	ｽｸﾘｭ	1	[EXC/PSS][EXE/PSS][EXK/PSS] [EXN/PSS]
A3	B-23642-00911		COVER-ASSY,SIDE	ｶﾊﾞｰｱｯｾﾝ	1	[EXC/PSS][EXE/PSS][EXK/PSS] [EXN/PSS] INC.7-9
7	NO PART NO.	#	COVER,SIDE	ｶﾊﾞｰ	1	[EXC/PSS][EXE/PSS][EXK/PSS] [EXN/PSS]
8	B-23641-03716		BUSHING	ﾌﾞｯｼﾝｸﾞ	1	[EXC/PSS][EXE/PSS][EXK/PSS] [EXN/PSS]
9	B-95121-06000		O-RING	Oﾘﾝｸﾞ	1	[EXC/PSS][EXE/PSS][EXK/PSS] [EXN/PSS]
A4	B-23643-00618		COVER-ASSY,TOP	ﾄｯﾌﾟｶﾊﾞｰｱｯｾﾝ	1	[EXC/PSS][EXE/PSS][EXK/PSS] [EXN/PSS] INC.10-13
10	NO PART NO.	#	COVER,TOP	ｶﾊﾞｰ	1	[EXC/PSS][EXE/PSS][EXK/PSS] [EXN/PSS]
11	NO PART NO.	#	BRG,RADIAL	ﾍﾞｱﾘﾝｸﾞ	1	[EXC/PSS][EXE/PSS][EXK/PSS] [EXN/PSS]
12	NO PART NO.	#	SEAL,OIL	ｼｰﾙ	1	[EXC/PSS][EXE/PSS][EXK/PSS] [EXN/PSS]
13	B-95121-06000		O-RING	Oﾘﾝｸﾞ	1	[EXC/PSS][EXE/PSS][EXK/PSS] [EXN/PSS]
A5	B-23643-00296		HOUSING-ASSY,VALAE	ﾊﾞﾙﾌﾞﾊｳｼﾞﾝｸﾞｱｯｾﾝ	1	[EXC/PSS][EXE/PSS][EXK/PSS] [EXN/PSS] INC.14-18
14	NO PART NO.	#	HOUSING,VALVE	ﾊｳｼﾞﾝｸﾞ	1	[EXC/PSS][EXE/PSS][EXK/PSS] [EXN/PSS]
15	NO PART NO.	#	SPOOL	ｽﾌﾟｰﾙ	1	[EXC/PSS][EXE/PSS][EXK/PSS] [EXN/PSS]
16	14354-12321		SPRING	ｽﾌﾟﾘﾝｸﾞ	4	[EXC/PSS][EXE/PSS][EXK/PSS] [EXN/PSS]
17	B-95151-06300		O-RING	Oﾘﾝｸﾞ	2	[EXC/PSS][EXE/PSS][EXK/PSS] [EXN/PSS]
18	25594-52141		FERRULE	ﾌｪﾙｰﾙ	4	[EXC/PSS][EXE/PSS][EXK/PSS] [EXN/PSS]
19	B-23641-00313		SHAFT,SECTOR	ｼｬﾌﾄ	1	[EXC/PSS][EXE/PSS][EXK/PSS] [EXN/PSS]
20	B-23641-01609		RACE,THRUST	ﾚｰｽ	1	[EXC/PSS][EXE/PSS][EXK/PSS] [EXN/PSS]

FIG.69 GEAR BOX [(EXC,EXE,EXK,EXN)/PSS]

(F6034140) ｷﾞﾔｰﾎﾞｯｸｽ

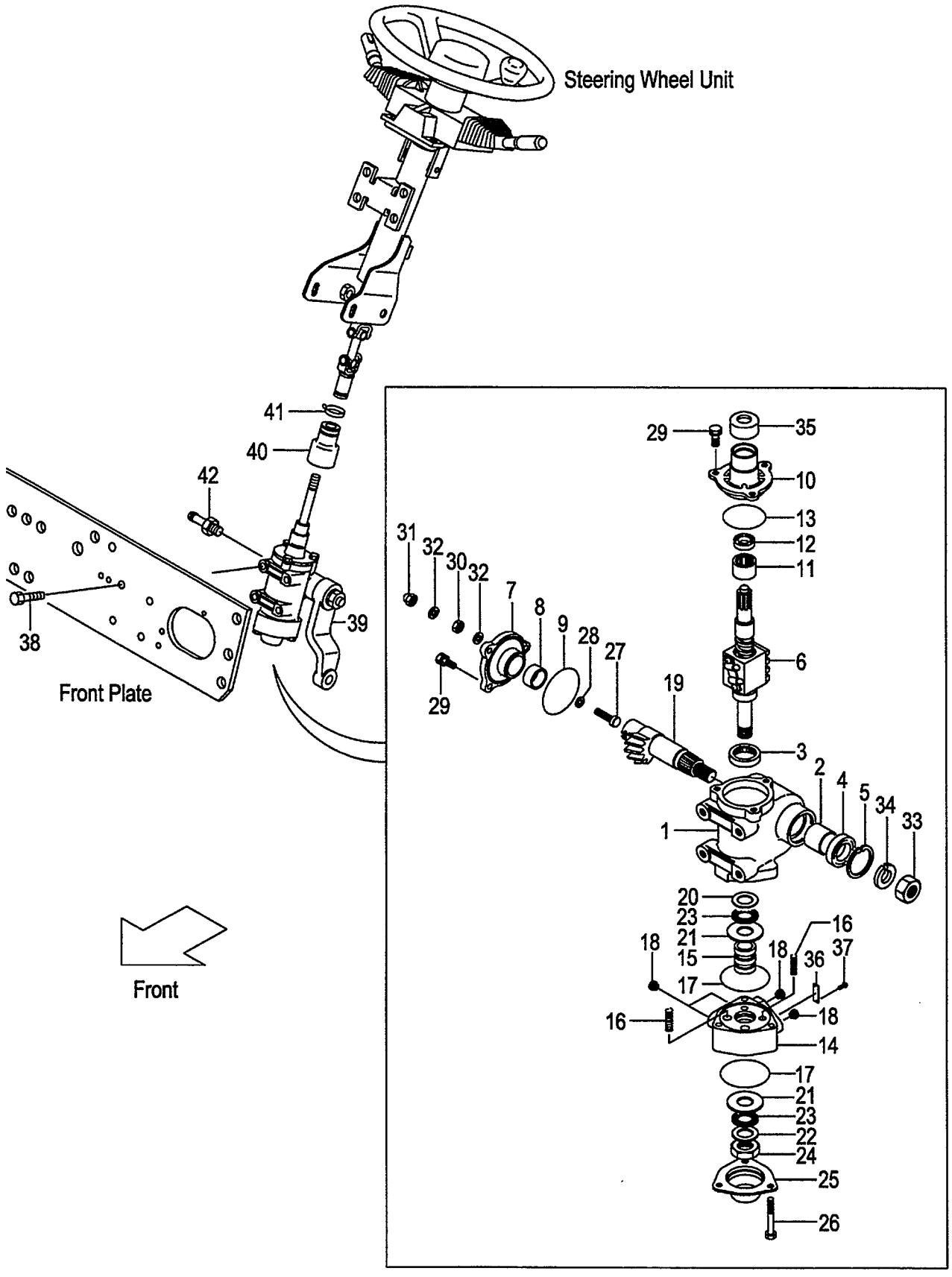

A:FD30C7 FD30T7

Item No	Part No.	Mark	Description		Req'd	Remarks : Serial No.
21	B-23641-01610		RACE,THRUST	レース	2	[EXC/PSS][EXE/PSS][EXK/PSS][EXN/PSS]
22	B-23451-02212		RACE,THRUST	レース	1	[EXC/PSS][EXE/PSS][EXK/PSS][EXN/PSS]
23	B-23451-02106		BRG,THRUST	ﾍﾞｱﾘﾝｸﾞ	2	[EXC/PSS][EXE/PSS][EXK/PSS][EXN/PSS]
24	B-23641-02227		NUT	ﾅｯﾄ	1	[EXC/PSS][EXE/PSS][EXK/PSS][EXN/PSS]
25	B-23641-02508		COVER,END	ｶﾊﾞｰ	1	[EXC/PSS][EXE/PSS][EXK/PSS][EXN/PSS]
26	B-23641-03314		BOLT	ﾎﾞﾙﾄ	3	[EXC/PSS][EXE/PSS][EXK/PSS][EXN/PSS]
27	14354-12211		SCREW,ADJUST	ｽｸﾘｭ	1	[EXC/PSS][EXE/PSS][EXK/PSS][EXN/PSS]
28	14354-12221		SHIM,ADJUST-SCREW	ｼﾑ	1	[EXC/PSS][EXE/PSS][EXK/PSS][EXN/PSS]
29	B-23711-03701		BOLT	ﾎﾞﾙﾄ	6	[EXC/PSS][EXE/PSS][EXK/PSS][EXN/PSS]
30	01402-10010		NUT	ﾅｯﾄ	1	[EXC/PSS][EXE/PSS][EXK/PSS][EXN/PSS]
31	14354-12261		NUT,CAP	ﾅｯﾄ	1	[EXC/PSS][EXE/PSS][EXK/PSS][EXN/PSS]
32	14354-12251		PACKING	ﾊﾟｯｷﾝｸﾞ	2	[EXC/PSS][EXE/PSS][EXK/PSS][EXN/PSS]
33	B-23641-02218		NUT	ﾅｯﾄ	1	[EXC/PSS][EXE/PSS][EXK/PSS][EXN/PSS]
34	B-94101-20512		WASHER	ﾜｯｼｬ	1	[EXC/PSS][EXE/PSS][EXK/PSS][EXN/PSS]
35	B-23641-04303		COVER,DUST	ｶﾊﾞｰ	1	[EXC/PSS][EXE/PSS][EXK/PSS][EXN/PSS]
36	NO PART NO.	#	PLATE,NAME	ﾌﾟﾚｰﾄ	1	[EXC/PSS][EXE/PSS][EXK/PSS][EXN/PSS]
37	NO PART NO.	#	SCREW,DRIVE	ｽｸﾘｭ	2	[EXC/PSS][EXE/PSS][EXK/PSS][EXN/PSS]
38	01184-12030		BOLT	ﾎﾞﾙﾄ	4	[EXC/PSS][EXE/PSS][EXK/PSS][EXN/PSS]
39	239A4-22001		ARM,PITMAN	ｱｰﾑ	1	[EXC/PSS][EXE/PSS][EXK/PSS][EXN/PSS]
40	239A4-12211		BOOT,GEAR-BOX	ﾌﾞｰﾂ	1	[EXC/PSS][EXE/PSS][EXK/PSS][EXN/PSS]
41	04913-11200		BAND	ﾊﾞﾝﾄﾞ	1	[EXC/PSS][EXE/PSS][EXK/PSS][EXN/PSS]
42	25597-62211		NIPPLE	ﾆｯﾌﾟﾙ	1	[EXC/PSS][EXE/PSS][EXK/PSS][EXN/PSS]

FIG.70 STEERING WHEEL UNIT (TOR-CON):[EXN]

(F6034150) ステアリング゛ホイールユニット

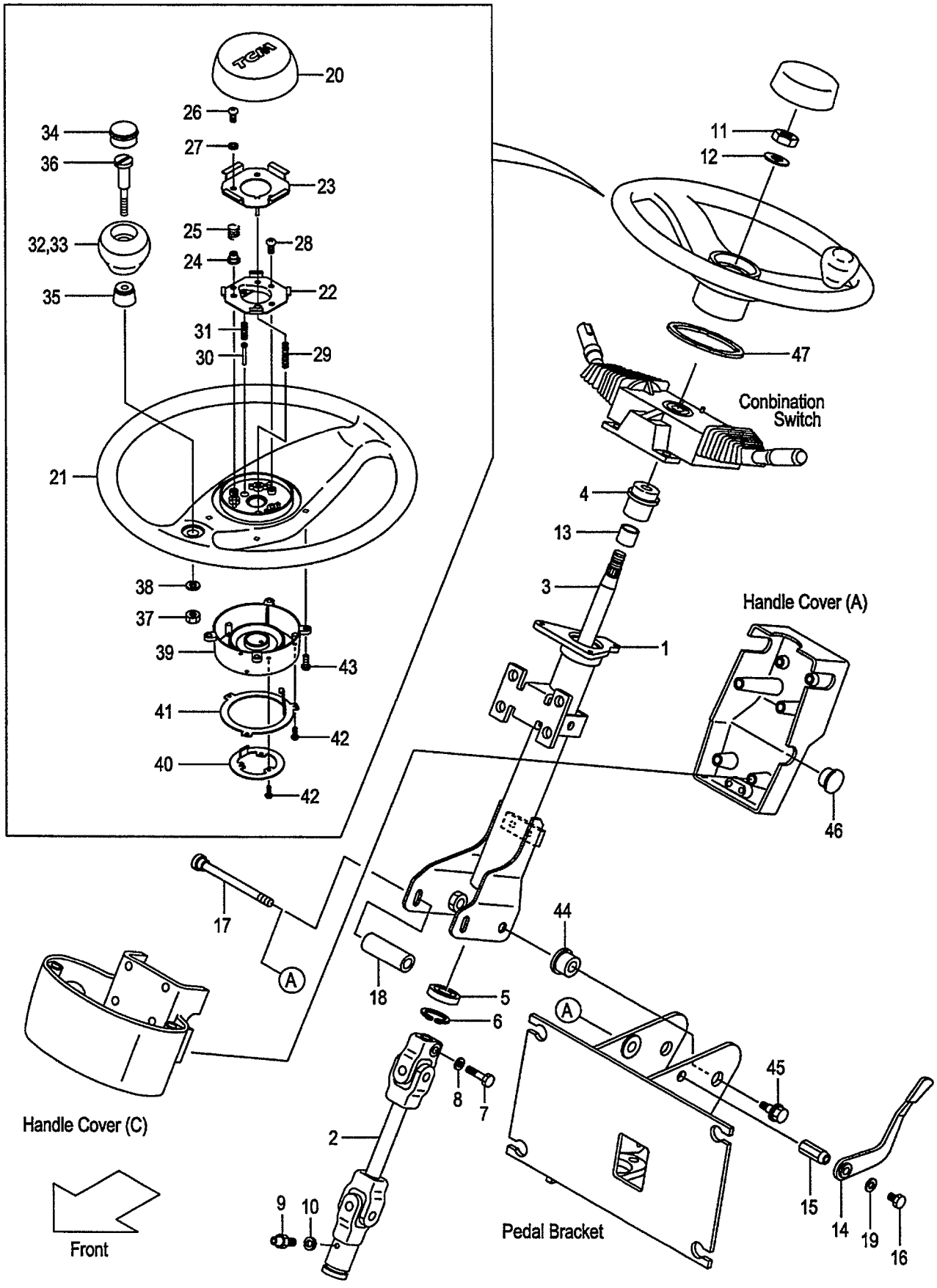

FIG.70
(F6034150)

A:FD30T7

Item No	Part No.	Mark	Description		Req'd	Remarks : Serial No.
A1	539A2-60301		SHAFT-ASSY,STEERING	ｽﾃｱﾘﾝｸﾞｼｬﾌﾄｱｯｾﾝ	1	[EXN] INC.1-13
1	539A2-62301		COLUMN	ｺﾗﾑ	1	[EXN]
2	239A4-12121		JOINT,UNIVERSAL	ｼﾞｮｲﾝﾄ	1	[EXN]
3	539A2-62321		SHAFT	ｼｬﾌﾄ	1	[EXN]
4	NO PART NO.		BUSHING,COLUMN	ﾌﾞｯｼﾝｸﾞ	1	[EXN]
5	NO PART NO.		BRG,BALL	ﾍﾞｱﾘﾝｸﾞ	1	[EXN]
6	NO PART NO.		RING,SNAP	ｽﾅｯﾌﾟﾘﾝｸﾞ	1	[EXN]
7	NO PART NO.		BOLT	ﾎﾞﾙﾄ	1	[EXN]
8	NO PART NO.		WASHER	ﾜｯｼｬ	1	[EXN]
9	NO PART NO.		FITTING	ﾌｨｯﾃｨﾝｸﾞ	1	[EXN]
10	NO PART NO.		WASHER	ﾜｯｼｬ	1	[EXN]
11	01402-00014		NUT	ﾅｯﾄ	1	[EXN]
12	14354-12271		WASHER	ﾜｯｼｬ	1	[EXN]
13	NO PART NO.		BUSHING,DU	ﾌﾞｯｼﾝｸﾞ	1	[EXN]
A2	209K4-10601		LEVER-ASSY,TILT-LOCK	ﾃｨﾙﾄﾛｯｸﾚﾊﾞｰｱｯｾﾝ	1	[EXN] INC.14-19
14	216G4-12171		LEVER	ﾚﾊﾞｰ	1	[EXN]
15	209K4-12301		NUT,LOCK	ﾅｯﾄ	1	[EXN]
16	215E4-12231		BOLT	ﾎﾞﾙﾄ	1	[EXN]
17	216G4-12151		BOLT,LOCK	ﾎﾞﾙﾄ	1	[EXN]
18	216G4-12161		COLLAR	ｶﾗｰ	1	[EXN]
19	214A4-12161		WASHER	ﾜｯｼｬ	1	[EXN]
A3	209K4-10801		WHEEL-ASSY,STEERING	ｽﾃｱﾘﾝｸﾞﾎｲｰﾙｱｯｾﾝ	1	[EXN] INC.20-43
20	216G4-12761		PAD,HORN	ﾊﾟｯﾄﾞ	1	[EXN]
21	209K4-12561		WHEEL,STEERING	ﾎｲｰﾙ	1	[EXN]
A4	271F4-12221		SWITCH-ASSY	ｽｲｯﾁｱｯｾﾝ	1	[EXN] INC.22-27
22	NO PART NO.	#	PLATE,CONTACT,A	ﾌﾟﾚｰﾄ	1	[EXN]
23	NO PART NO.	#	PLATE,CONTACT,B	ﾌﾟﾚｰﾄ	1	[EXN]
24	216G4-12601		INSULATOR	ｲﾝｼｭﾚｰﾀ	3	[EXN]
25	216G4-12611		SPRING,HORN	ｽﾌﾟﾘﾝｸﾞ	3	[EXN]
26	216G4-12621		SCREW	ｽｸﾘｭ	3	[EXN]
27	216G4-12631		WASHER,FIVER	ﾜｯｼｬ	3	[EXN]
28	216G4-12641		SCREW	ｽｸﾘｭ	2	[EXN]
29	216G4-12661		SPRING,EARTH	ｽﾌﾟﾘﾝｸﾞ	1	[EXN]
30	271F4-12231		PLUNGER	ﾌﾟﾗﾝｼﾞｬ	1	[EXN]
31	271F4-12241		SPRING,PLUNGER	ｽﾌﾟﾘﾝｸﾞ	1	[EXN]
A5	216G4-12681		KNOB-ASSY	ﾉﾌﾞｱｯｾﾝ	1	[EXN] INC.32-38
32	NO PART NO.	#	KNOB	ﾉﾌﾞ	1	[EXN]
33	NO PART NO.	#	INSERT,KNOB	ｲﾝｻｰﾄ	1	[EXN]
34	216G4-12711		CAP	ｷｬｯﾌﾟ	1	[EXN]
35	NO PART NO.	#	BUSHING	ﾌﾞｯｼﾝｸﾞ	1	[EXN]
36	NO PART NO.	#	SHAFT	ｼｬﾌﾄ	1	[EXN]
37	216G4-12741		NUT	ﾅｯﾄ	1	[EXN]
38	216G4-12751		WASHER	ﾜｯｼｬ	1	[EXN]
39	209K4-12541		COVER,CANCEL-CAM	ｶﾊﾞｰ	1	[EXN]
40	209K4-12531		RING,CONTACT,A	ﾘﾝｸﾞ	1	[EXN]
41	209K4-12521		RING,CONTACT,B	ﾘﾝｸﾞ	1	[EXN]
42	209K4-12511		SCREW	ｽｸﾘｭ	6	[EXN]
43	209K4-12501		SCREW	ｽｸﾘｭ	4	[EXN]
44	216G4-12101		BUSHING	ﾌﾞｯｼﾝｸﾞ	2	[EXN]
45	216G4-12111		BOLT	ﾎﾞﾙﾄ	2	[EXN]

FIG.70 STEERING WHEEL UNIT (TOR-CON):[EXN]

(F6034150) ステアリング゛ホイールユニット

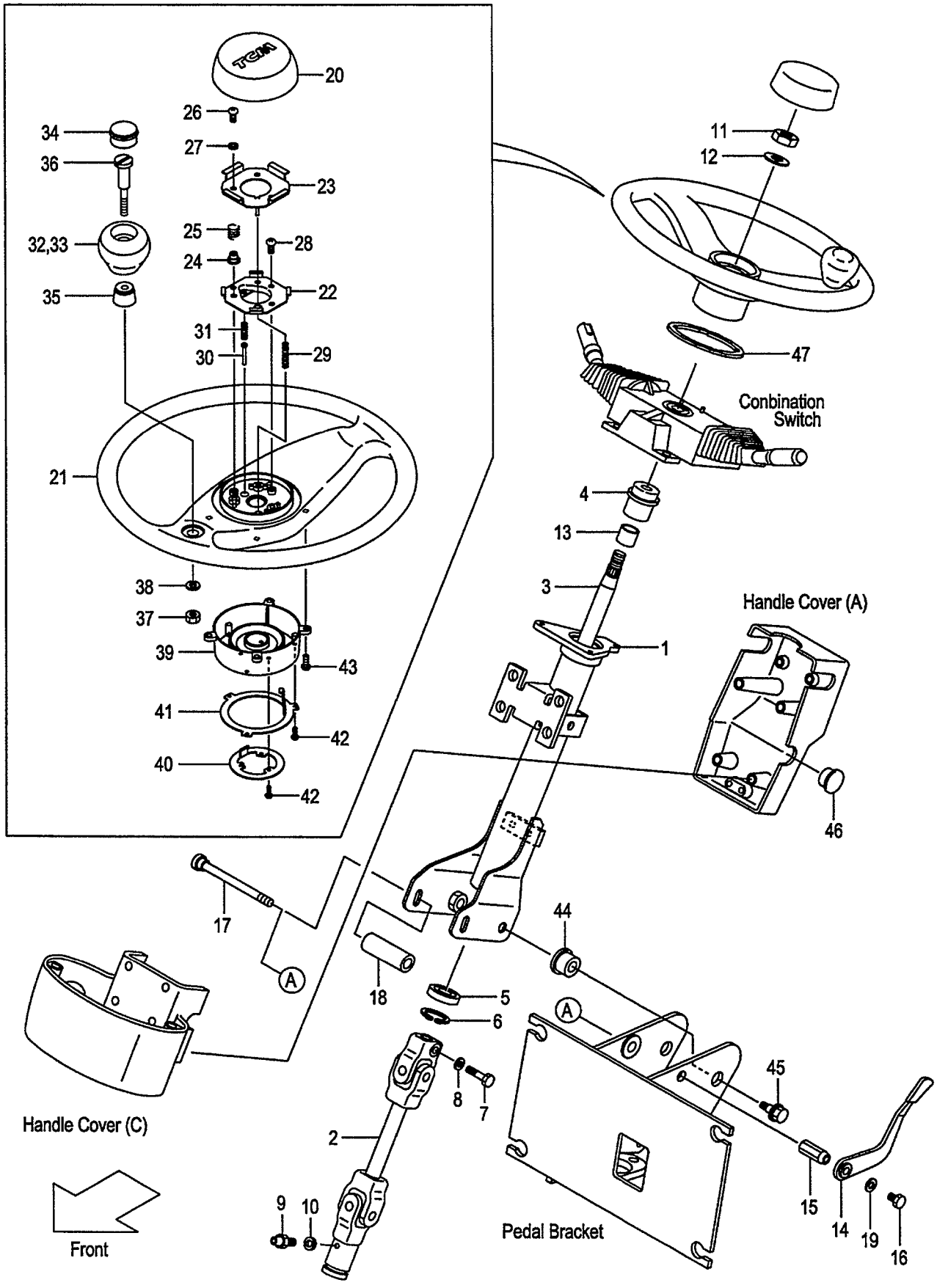

FIG.70
(F6034150)

A:FD30T7

Item No	Part No.	Mark	Description	Req'd	Remarks : Serial No.
46	514A5-12701		PLUG,HOLE ﾌﾟﾗｸﾞ	1	[EXN]
47	209P4-12111		RUBBER,HANDLE-WHEEL ﾗﾊﾞｰ	1	[EXN]

FIG.71 DRAG LINK
(F6034210) ﾄﾞﾗｯｸﾞﾘﾝｸ

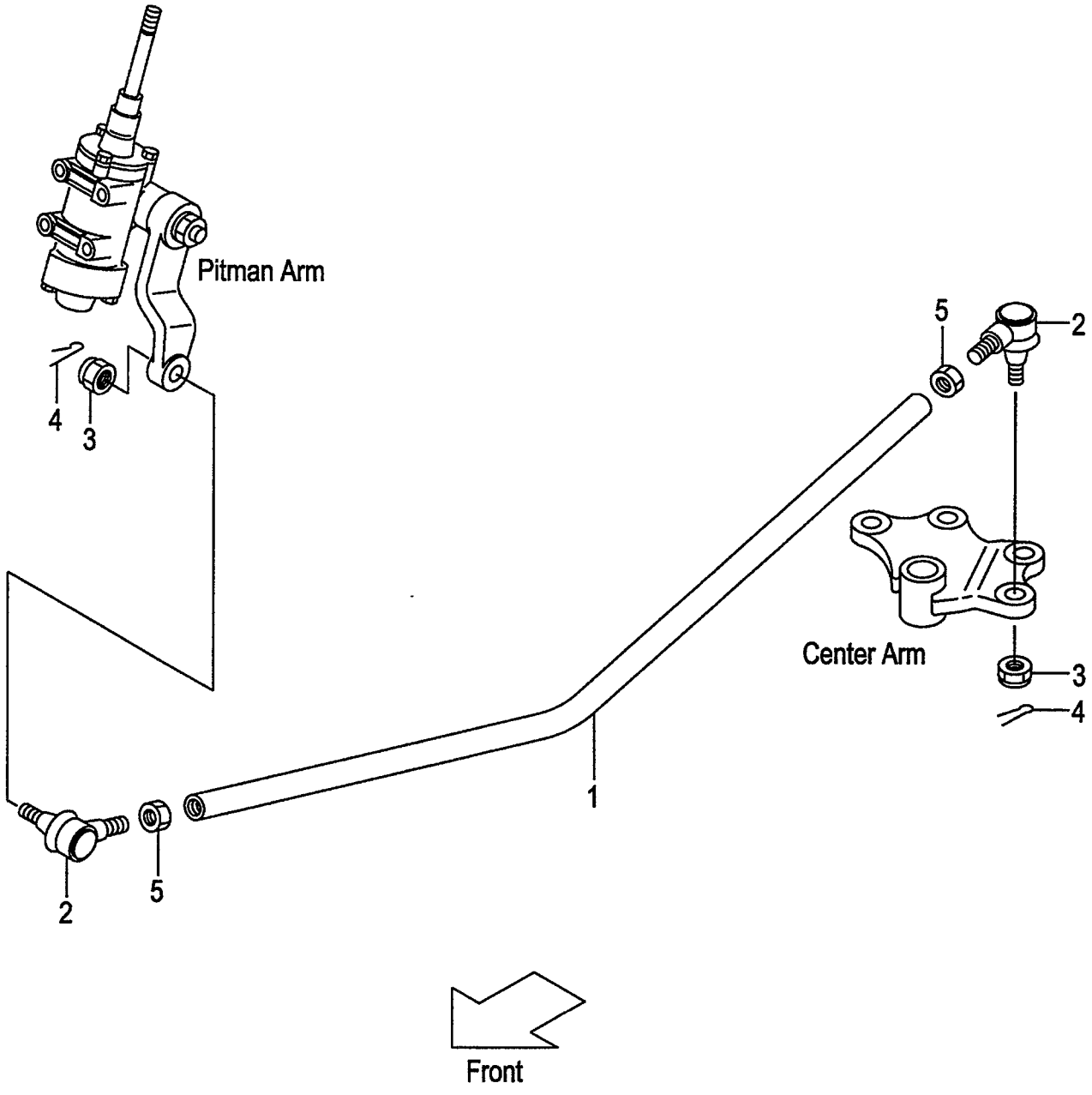

A:FD30C7 FD30T7
B:FD30W7

FIG.71
(F6034210)

Item No	Part No.	Mark	Description		Req'd	Remarks : Serial No.
1	234F4-22101		LINK,DRAG	ﾘﾝｸ	1	(WITHOUT EXC,EXE,EXK,EXN, OBT,EXB/OBT)
-	234F4-22101		LINK,DRAG	ﾘﾝｸ	1	A [EXC/PSS][EXE/PSS][EXK/PSS] [EXN/PSS]
A1	24234-30551		END-ASSY,ROD,RH	ｴﾝﾄﾞｱｯｾﾝ	2	(WITHOUT EXC,EXE,EXK,EXN, OBT,EXB/OBT) INC.2-4
-	24234-30551		END-ASSY,ROD,RH	ｴﾝﾄﾞｱｯｾﾝ	2	A [EXC/PSS][EXE/PSS][EXK/PSS] [EXN/PSS] INC.2-4
2	NO PART NO.	#	END,ROD,RH	ｴﾝﾄﾞ	2	(WITHOUT EXC,EXE,EXK,EXN, OBT,EXB/OBT)
-	NO PART NO.	#	END,ROD,RH	ｴﾝﾄﾞ	2	A [EXC/PSS][EXE/PSS][EXK/PSS] [EXN/PSS]
3	01412-10016		NUT	ﾅｯﾄ	2	(WITHOUT EXC,EXE,EXK,EXN, OBT,EXB/OBT)
-	01412-10016		NUT	ﾅｯﾄ	2	A [EXC/PSS][EXE/PSS][EXK/PSS] [EXN/PSS]
4	02200-32032		PIN,COTTER	ﾋﾟﾝ	2	(WITHOUT EXC,EXE,EXK,EXN, OBT,EXB/OBT)
-	02200-32032		PIN,COTTER	ﾋﾟﾝ	2	A [EXC/PSS][EXE/PSS][EXK/PSS] [EXN/PSS]
5	01402-00022		NUT	ﾅｯﾄ	2	(WITHOUT EXC,EXE,EXK,EXN, OBT,EXB/OBT)
-	01402-00022		NUT	ﾅｯﾄ	2	A [EXC/PSS][EXE/PSS][EXK/PSS] [EXN/PSS]

FIG.72 STEERING AXLE

(F6034310) ステアリング゛アクスル

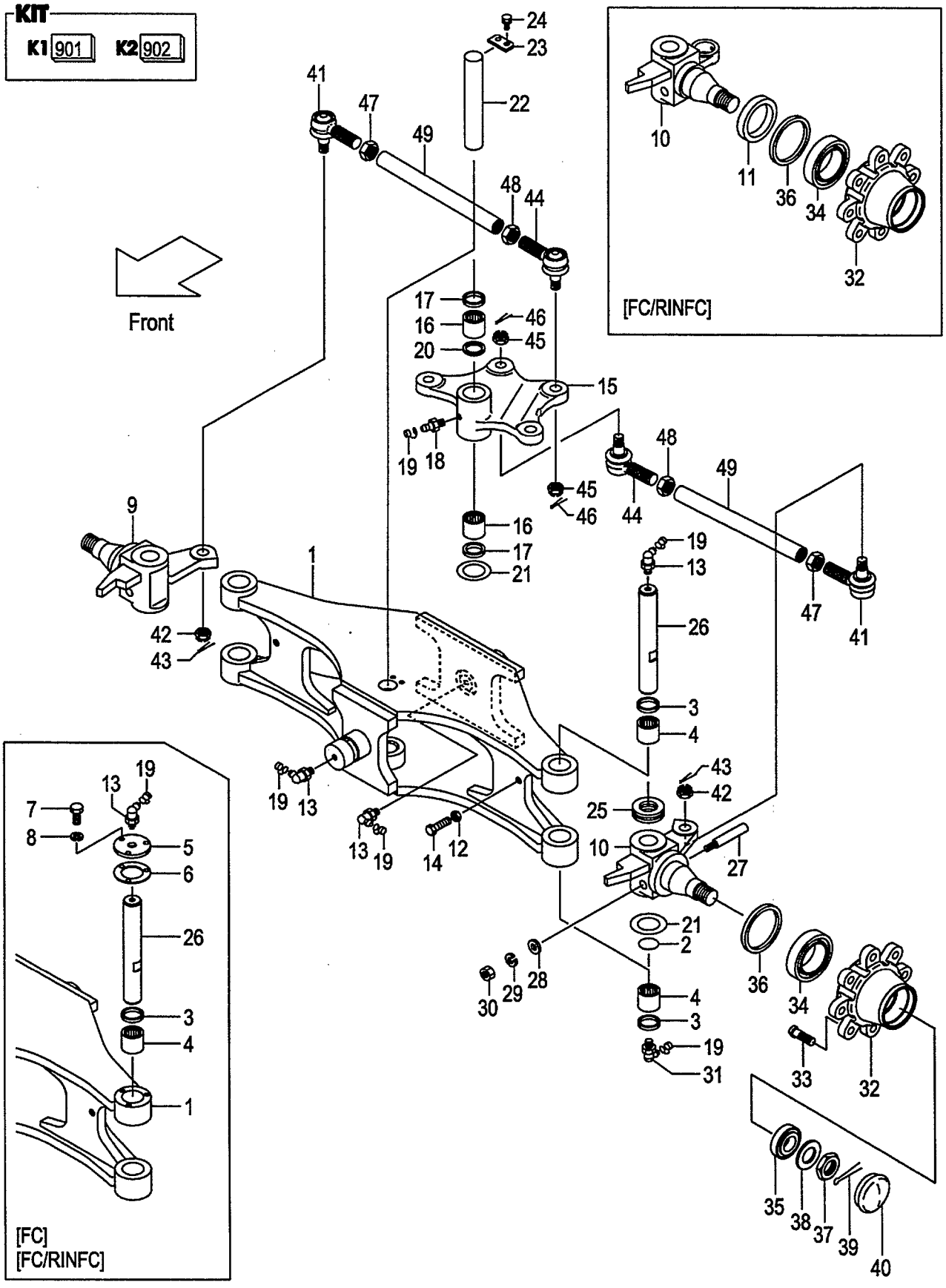

A:FD30C7 FD30T7 FD30W7

Item No	Part No.	Mark	Description		Req'd	Remarks : Serial No.
A1	234A4-30001		AXLE-ASSY,STEERING	ｽﾃｱﾘﾝｸﾞｱｸｽﾙｱｯｾﾝ	1	INC.1-4,9,10,12-49
-	534A3-70021		AXLE-ASSY,STEERING	ｽﾃｱﾘﾝｸﾞｱｸｽﾙｱｯｾﾝ	1	[FC] INC.1-10,12-49
-	534A3-70031		AXLE-ASSY,STEERING	ｽﾃｱﾘﾝｸﾞｱｸｽﾙｱｯｾﾝ	1	[FC/RINFC] INC.1-49
901	215E4-39801	K1	KIT,REPAIR	ﾘﾍﾟｱｷｯﾄ	1	INC.2-4,13,21,25,27-30
902	24454-39812	K2	KIT,REPAIR	ﾘﾍﾟｱｷｯﾄ	1	INC.16-18,20,21,23,24
1	234A4-30111		AXLE,STEERING	ｱｸｽﾙ	1	
-	534A3-70101		AXLE,STEERING	ｱｸｽﾙ	1	[FC][FC/RINFC]
2	23654-32161	*	O-RING	Oﾘﾝｸﾞ	2	
3	214A4-32161	*	SEAL,DUST	ｼｰﾙ	4	
4	03146-13201	*	BRG,NEEDLE	ﾍﾞｱﾘﾝｸﾞ	4	
5	514A3-72052		PLATE,CAP	ﾌﾟﾚｰﾄ	2	[FC][FC/RINFC]
6	514A3-72062		PACKING	ﾊﾟｯｷﾝｸﾞ	2	[FC][FC/RINFC]
7	01141-06012		BOLT	ﾎﾞﾙﾄ	6	[FC][FC/RINFC]
8	02010-10006		WASHER	ﾜｯｼｬ	6	[FC][FC/RINFC]
9	234A4-32261		KNUCKLE,RH	ﾅｯｸﾙ	1	
-	534A3-72111		KNUCKLE,RH	ﾅｯｸﾙ	1	[FC/RINFC]
10	234A4-32271		KNUCKLE,LH	ﾅｯｸﾙ	1	
-	534A3-72121		KNUCKLE,LH	ﾅｯｸﾙ	1	[FC/RINFC]
11	514A3-72211		SEAT,OIL-SEAL	ｼｰﾄ	2	[FC/RINFC]
12	01402-00012		NUT	ﾅｯﾄ	2	
13	04901-00190	*	FITTING	ﾌｨｯﾃｨﾝｸﾞ	4	
14	01100-12030		BOLT	ﾎﾞﾙﾄ	2	
15	24454-30512		ARM,CENTER	ｱｰﾑ	1	
16	03146-13201	*	BRG,NEEDLE	ﾍﾞｱﾘﾝｸﾞ	2	
17	23654-32081	*	SEAL,DUST	ｼｰﾙ	2	
18	04901-00100	*	FITTING	ﾌｨｯﾃｨﾝｸﾞ	1	
19	22199-12401		CAP,NIPPLE	ｷｬｯﾌﾟ	7	
20	24454-32391	*	SPACER	ｽﾍﾟｰｻ	1	
21	22214-30321	*	SHIM	ｼﾑ	7	
22	24454-32161		PIN,CENTER-ARM	ﾋﾟﾝ	1	
23	20224-30061	*	PLATE,SET	ﾌﾟﾚｰﾄ	1	
24	01183-08016	*	BOLT	ﾎﾞﾙﾄ	2	
25	03126-83201	*	BRG,THRUST	ﾍﾞｱﾘﾝｸﾞ	2	
26	24454-32232		KINGPIN	ｷﾝｸﾞﾋﾟﾝ	2	
-	514A3-72201		KINGPIN	ｷﾝｸﾞﾋﾟﾝ	2	[FC][FC/RINFC]
27	215E4-32341	*	PIN,LOCK	ﾋﾟﾝ	2	
28	02000-00010	*	WASHER	ﾜｯｼｬ	2	
29	02010-00010	*	WASHER	ﾜｯｼｬ	2	
30	01400-00010	*	NUT	ﾅｯﾄ	2	
31	04901-00191		FITTING	ﾌｨｯﾃｨﾝｸﾞ	2	
32	214A4-32041		HUB,REAR	ﾊﾌﾞ	2	
33	23654-32041		BOLT,HUB	ﾎﾞﾙﾄ	16	
34	03071-30211		BRG,TAPER-ROLLER	ﾍﾞｱﾘﾝｸﾞ	2	
35	03071-30207		BRG,TAPER-ROLLER	ﾍﾞｱﾘﾝｸﾞ	2	
36	03217-08501		SEAL,OIL	ｼｰﾙ	2	
37	01412-00030		NUT,CASTLE	ﾅｯﾄ	2	
38	02000-00030		WASHER	ﾜｯｼｬ	2	
39	02200-06055		PIN,COTTER	ﾋﾟﾝ	2	
40	214A4-32051		CAP	ｷｬｯﾌﾟ	2	
A2	24234-30551		END-ASSY,ROD,RH	ｴﾝﾄﾞｱｯｾﾝ	2	INC.41-43

FIG.72 STEERING AXLE

(F6034310) ステアリング゛アクスル

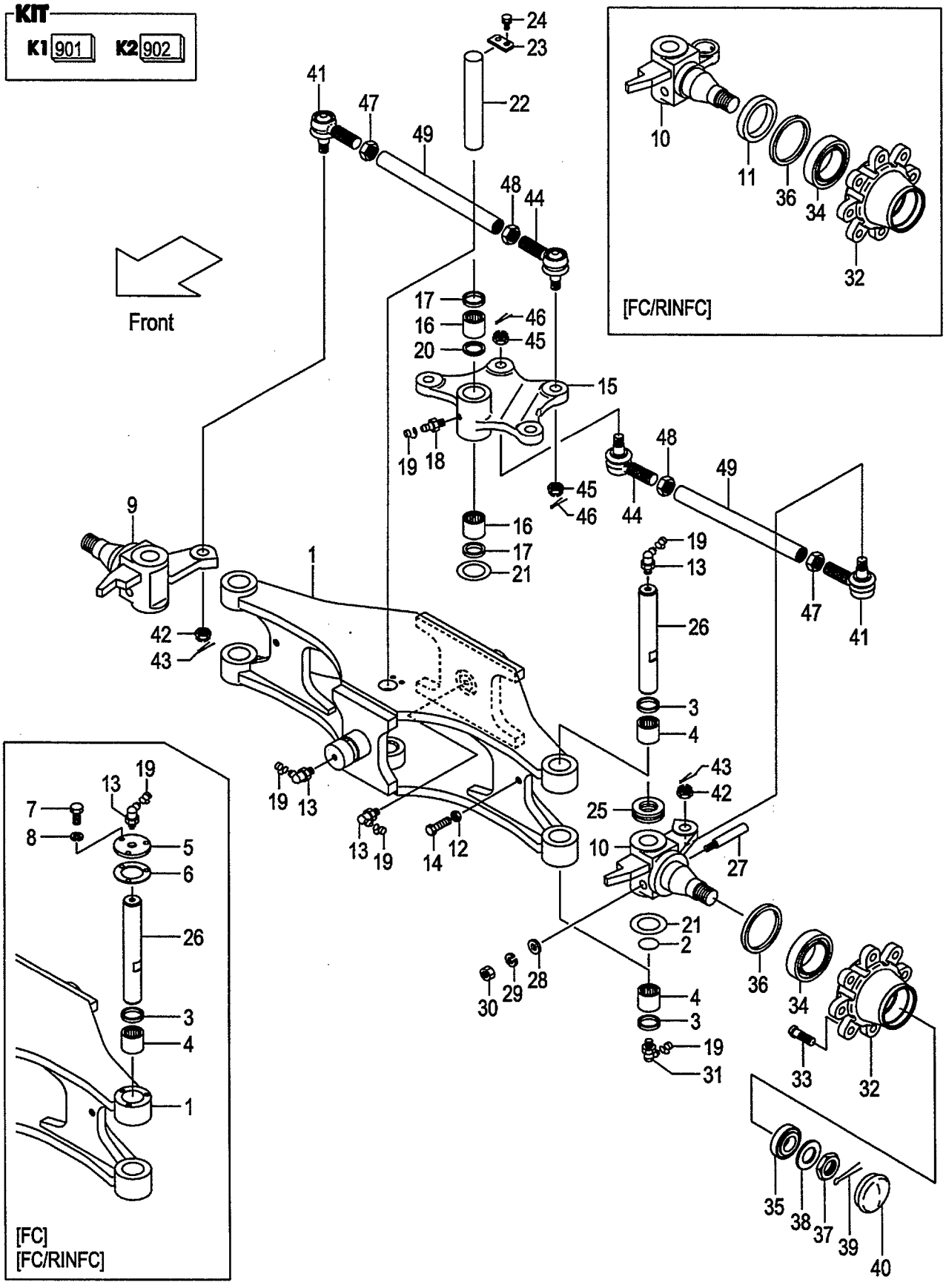

A:FD30C7 FD30T7 FD30W7

Item No	Part No.	Mark	Description		Req'd	Remarks : Serial No.
41	NO PART NO.	#	END,ROD,RH	ｴﾝﾄﾞ	2	
42	01412-10016		NUT,CASTLE	ﾅｯﾄ	2	
43	02200-32032		PIN,COTTER	ﾋﾟﾝ	2	
A3	24234-30561		END-ASSY,ROD,LH	ｴﾝﾄﾞｱｯｾﾝ	2	INC.44-46
44	NO PART NO.	#	END,ROD,LH	ｴﾝﾄﾞ	2	
45	01412-10016		NUT,CASTLE	ﾅｯﾄ	2	
46	02200-32032		PIN,COTTER	ﾋﾟﾝ	2	
47	24234-32411		NUT,RH	ﾅｯﾄ	2	
48	24234-32421		NUT,LH	ﾅｯﾄ	2	
49	214A4-32131		ROD,TIE	ﾛｯﾄﾞ	2	

FIG.73 STEERING AXLE [EXC][EXE][EXK][EXN][OBT]

(F6034320) ステアリングアクスル

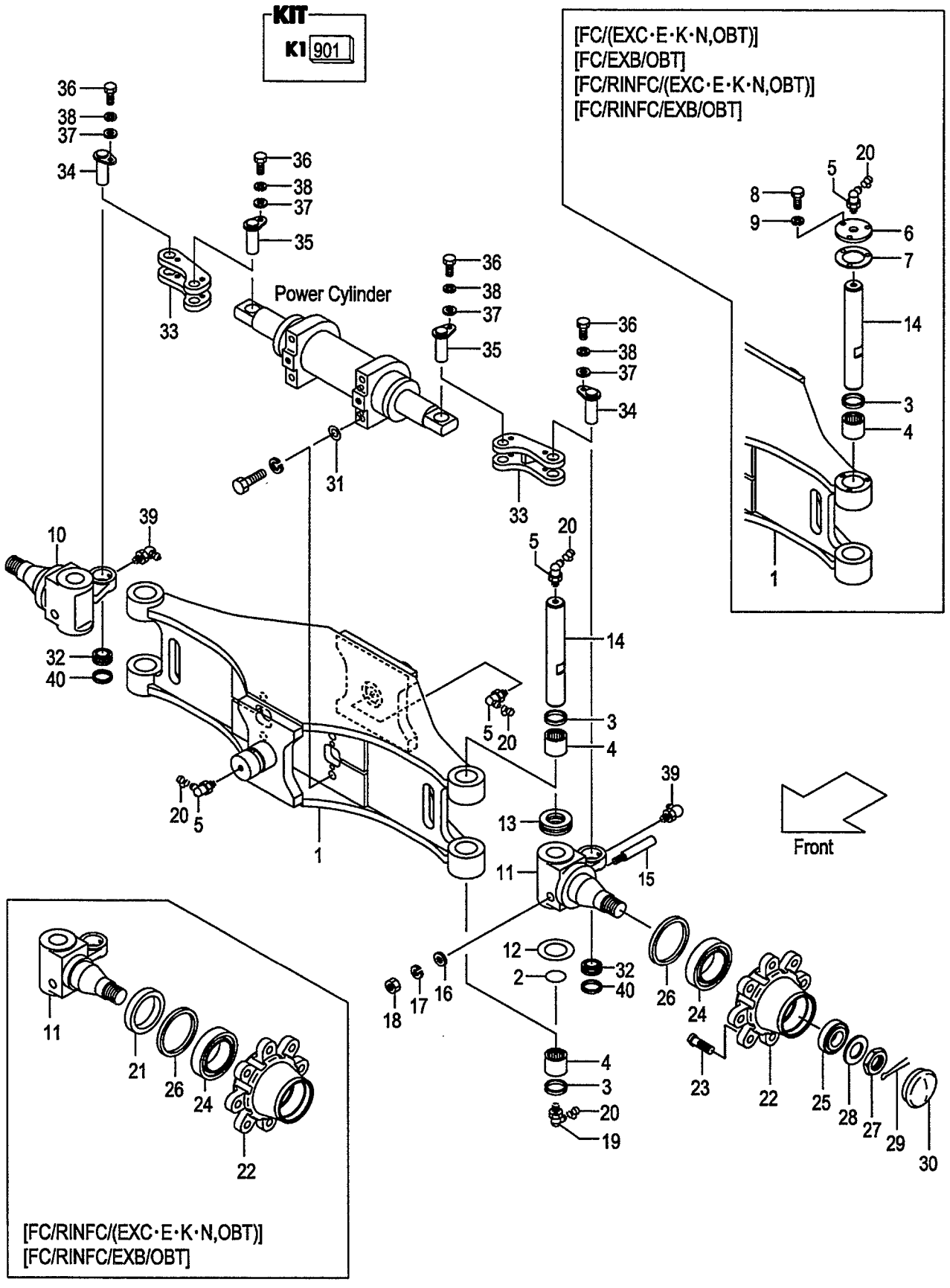

A:FD30C7 FD30T7

Item No	Part No.	Mark	Description		Req'd	Remarks : Serial No.
A1	533A2-40402		AXLE-ASSY,STEERING	ｽﾃｱﾘﾝｸﾞｱｸｽﾙｱｯｾﾝ	1	[EXC&E&K&N][OBT][EXB/OBT] INC.1-5,10-20,22-32
-	533A2-40502		AXLE-ASSY,STEERING	ｽﾃｱﾘﾝｸﾞｱｸｽﾙｱｯｾﾝ	1	[FC/EXC&E&K&N][FC/OBT] [FC/EXB/OBT] INC.1-20,22-32
-	533A2-40552		AXLE-ASSY,STEERING	ｽﾃｱﾘﾝｸﾞｱｸｽﾙｱｯｾﾝ	1	[FC/RINFC/EXC&E&K&N] INC.1-32
-	533A2-40552		AXLE-ASSY,STEERING	ｽﾃｱﾘﾝｸﾞｱｸｽﾙｱｯｾﾝ	1	[FC/RINFC/OBT] [FC/RINFC/EXB/OBT] INC.1-32
901	215E4-39801	K1	KIT,REPAIR	ﾘﾍﾟｱｷｯﾄ	1	[EXC&E&K&N][OBT][EXB/OBT] INC.2-5,12,13,15-19
1	514A2-40104		AXLE,STEERING	ｱｸｽﾙ	1	[EXC&E&K&N][OBT][EXB/OBT]
-	514A2-44022		AXLE,STEERING	ｱｸｽﾙ	1	[FC/EXC&E&K&N][FC/OBT] [FC/EXB/OBT]
-	514A2-44022		AXLE,STEERING	ｱｸｽﾙ	1	[FC/RINFC/EXC&E&K&N]
-	514A2-44022		AXLE,STEERING	ｱｸｽﾙ	1	[FC/RINFC/OBT] [FC/RINFC/EXB/OBT]
2	23654-32161	*	O-RING	Oﾘﾝｸﾞ	2	[EXC&E&K&N][OBT][EXB/OBT]
3	214A4-32161	*	SEAL,DUST	ｼｰﾙ	4	[EXC&E&K&N][OBT][EXB/OBT]
4	03146-13201	*	BRG,NEEDLE	ﾍﾞｱﾘﾝｸﾞ	4	[EXC&E&K&N][OBT][EXB/OBT]
5	04901-00190	*	FITTING	ﾌｨｯﾃｨﾝｸﾞ	4	[EXC&E&K&N][OBT][EXB/OBT]
6	514A3-72052		PLATE,CAP	ﾌﾟﾚｰﾄ	2	[FC/EXC&E&K&N][FC/OBT] [FC/EXB/OBT]
-	514A3-72052		PLATE,CAP	ﾌﾟﾚｰﾄ	2	[FC/RINFC/EXC&E&K&N]
-	514A3-72052		PLATE,CAP	ﾌﾟﾚｰﾄ	2	[FC/RINFC/OBT] [FC/RINFC/EXB/OBT]
7	514A3-72062		PACKING	ﾊﾟｯｷﾝｸﾞ	2	[FC/EXC&E&K&N][FC/OBT] [FC/EXB/OBT]
-	514A3-72062		PACKING	ﾊﾟｯｷﾝｸﾞ	2	[FC/RINFC/EXC&E&K&N]
-	514A3-72062		PACKING	ﾊﾟｯｷﾝｸﾞ	2	[FC/RINFC/OBT] [FC/RINFC/EXB/OBT]
8	01141-06012		BOLT	ﾎﾞﾙﾄ	6	[FC/EXC&E&K&N][FC/OBT] [FC/EXB/OBT]
-	01141-06012		BOLT	ﾎﾞﾙﾄ	6	[FC/RINFC/EXC&E&K&N]
-	01141-06012		BOLT	ﾎﾞﾙﾄ	6	[FC/RINFC/OBT] [FC/RINFC/EXB/OBT]
9	02010-10006		WASHER	ﾜｯｼｬ	6	[FC/EXC&E&K&N][FC/OBT] [FC/EXB/OBT]
-	02010-10006		WASHER	ﾜｯｼｬ	6	[FC/RINFC/EXC&E&K&N]
-	02010-10006		WASHER	ﾜｯｼｬ	6	[FC/RINFC/OBT] [FC/RINFC/EXB/OBT]
10	533A2-42032		KNUCKLE,RH	ﾅｯｸﾙ	1	[EXC&E&K&N][OBT][EXB/OBT]
-	533A2-42202		KNUCKLE,RH	ﾅｯｸﾙ	1	[FC/RINFC/EXC&E&K&N]
-	533A2-42202		KNUCKLE,RH	ﾅｯｸﾙ	1	[FC/RINFC/OBT] [FC/RINFC/EXB/OBT]
11	533A2-42042		KNUCKLE,LH	ﾅｯｸﾙ	1	[EXC&E&K&N][OBT][EXB/OBT]
-	533A2-42212		KNUCKLE,LH	ﾅｯｸﾙ	1	[FC/RINFC/EXC&E&K&N]
-	533A2-42212		KNUCKLE,LH	ﾅｯｸﾙ	1	[FC/RINFC/OBT] [FC/RINFC/EXB/OBT]
12	22214-30321	*	SHIM	ｼﾑ	6	[EXC&E&K&N][OBT][EXB/OBT]
13	03126-83201	*	BRG,THRUST	ﾍﾞｱﾘﾝｸﾞ	2	[EXC&E&K&N][OBT][EXB/OBT]
14	24454-32232		KINGPIN	ｷﾝｸﾞﾋﾟﾝ	2	[EXC&E&K&N][OBT][EXB/OBT]

FIG.73 STEERING AXLE [EXC][EXE][EXK][EXN][OBT]

(F6034320) ステアリングアクスル

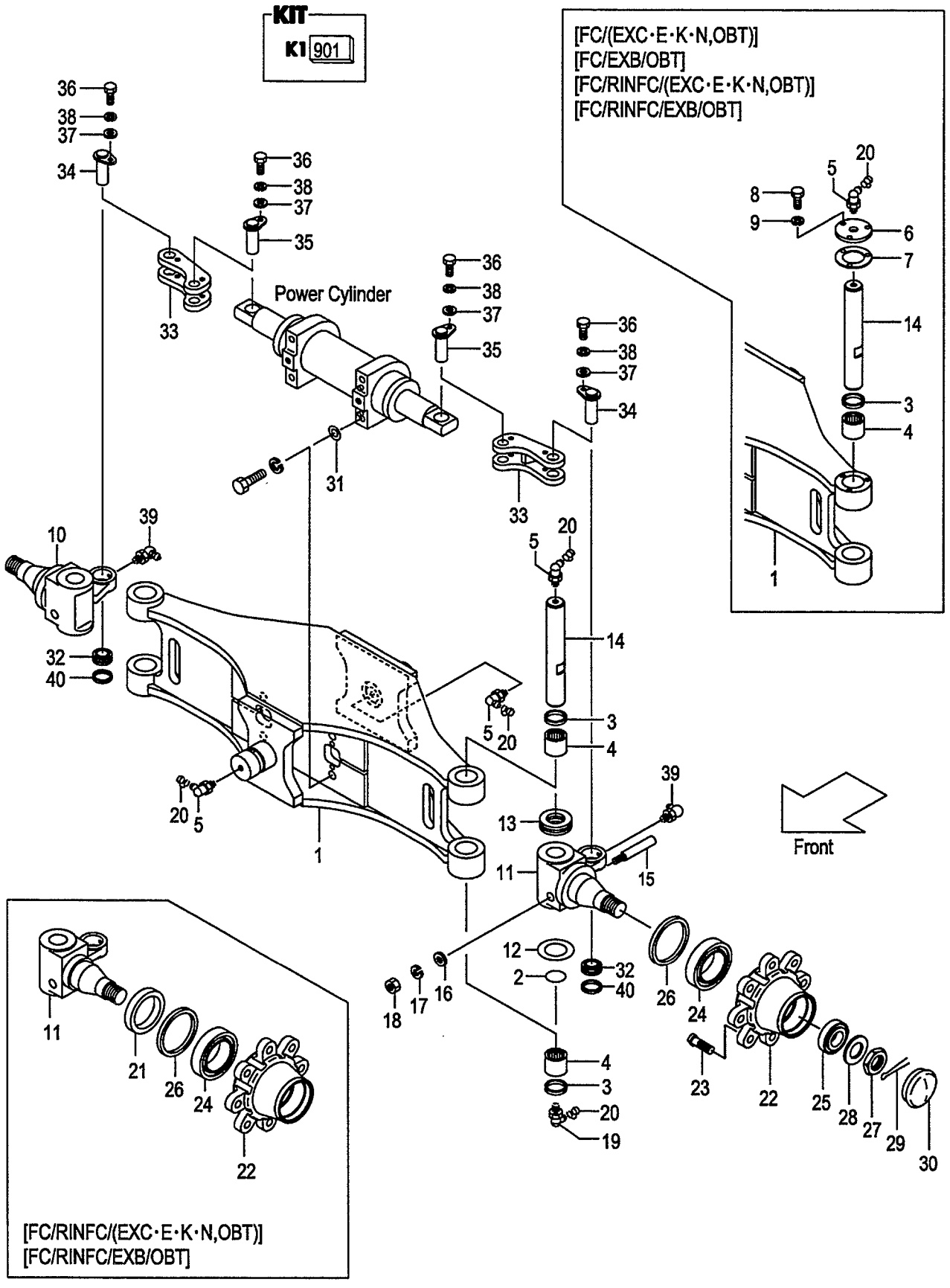

FIG.73
(F6034320)

A:FD30C7 FD30T7

Item No	Part No.	Mark	Description		Req'd	Remarks : Serial No.
-	514A2-44071		KINGPIN	ｷﾝｸﾞﾋﾟﾝ	2	[FC/EXC&E&K&N][FC/OBT]
						[FC/EXB/OBT]
-	514A2-44071		KINGPIN	ｷﾝｸﾞﾋﾟﾝ	2	[FC/RINFC/EXC&E&K&N]
-	514A2-44071		KINGPIN	ｷﾝｸﾞﾋﾟﾝ	2	[FC/RINFC/OBT]
						[FC/RINFC/EXB/OBT]
15	215E4-32341	*	PIN,LOCK	ﾋﾟﾝ	2	[EXC&E&K&N][OBT][EXB/OBT]
16	02000-00010	*	WASHER	ﾜｯｼｬ	2	[EXC&E&K&N][OBT][EXB/OBT]
17	02010-00010	*	WASHER	ﾜｯｼｬ	2	[EXC&E&K&N][OBT][EXB/OBT]
18	01400-00010	*	NUT	ﾅｯﾄ	2	[EXC&E&K&N][OBT][EXB/OBT]
19	04901-00191	*	FITTING	ﾌｨｯﾃｨﾝｸﾞ	2	[EXC&E&K&N][OBT][EXB/OBT]
20	22199-12401		CAP,NIPPLE	ｷｬｯﾌﾟ	6	[EXC&E&K&N][OBT][EXB/OBT]
21	514A3-72211		SEAT,OIL-SEAL	ｼｰﾄ	2	[FC/RINFC/EXC&E&K&N]
-	514A3-72211		SEAT,OIL-SEAL	ｼｰﾄ	2	[FC/RINFC/OBT]
						[FC/RINFC/EXB/OBT]
22	214A4-32041		HUB,REAR	ﾊﾌﾞ	2	[EXC&E&K&N][OBT][EXB/OBT]
23	23654-32041		BOLT,HUB	ﾎﾞﾙﾄ	16	[EXC&E&K&N][OBT][EXB/OBT]
24	03071-30211		BRG,TAPER-ROLLER	ﾍﾞｱﾘﾝｸﾞ	2	[EXC&E&K&N][OBT][EXB/OBT]
25	03071-30207		BRG,TAPER-ROLLER	ﾍﾞｱﾘﾝｸﾞ	2	[EXC&E&K&N][OBT][EXB/OBT]
26	03217-08501		SEAL,OIL	ｼｰﾙ	2	[EXC&E&K&N][OBT][EXB/OBT]
27	01412-00030		NUT,CASTLE	ﾅｯﾄ	2	[EXC&E&K&N][OBT][EXB/OBT]
28	02000-00030		WASHER	ﾜｯｼｬ	2	[EXC&E&K&N][OBT][EXB/OBT]
29	02200-06055		PIN,COTTER	ﾋﾟﾝ	2	[EXC&E&K&N][OBT][EXB/OBT]
30	214A4-32051		CAP	ｷｬｯﾌﾟ	2	[EXC&E&K&N][OBT][EXB/OBT]
31	514A2-42481		SHIM,T-0.2	ｼﾑ	1	[EXC&E&K&N][OBT][EXB/OBT]
32	215E4-52231		JOINT,SPHERE-FACE	ｼﾞｮｲﾝﾄ	2	[EXC&E&K&N][OBT][EXB/OBT]
33	533A2-42071		YOKE	ﾖｰｸ	2	[EXC&E&K&N][OBT][EXB/OBT]
34	514A2-42721		PIN	ﾋﾟﾝ	2	[EXC&E&K&N][OBT][EXB/OBT]
35	533A2-42101		PIN	ﾋﾟﾝ	2	[EXC&E&K&N][OBT][EXB/OBT]
36	01103-08016		BOLT	ﾎﾞﾙﾄ	4	[EXC&E&K&N][OBT][EXB/OBT]
37	02000-00008		WASHER	ﾜｯｼｬ	4	[EXC&E&K&N][OBT][EXB/OBT]
38	02011-00008		WASHER	ﾜｯｼｬ	4	[EXC&E&K&N][OBT][EXB/OBT]
39	272A8-52101		NIPPLE,GREASE	ﾆｯﾌﾟﾙ	2	[EXC&E&K&N][OBT][EXB/OBT]
40	215E4-52301		COLLAR	ｶﾗｰ	2	[EXC&E&K&N][OBT][EXB/OBT]

FIG.74 STEERING AXLE [(EXC,EXE,EXK,EXN)/PSS]

(F6034330) ステアリングアクスル

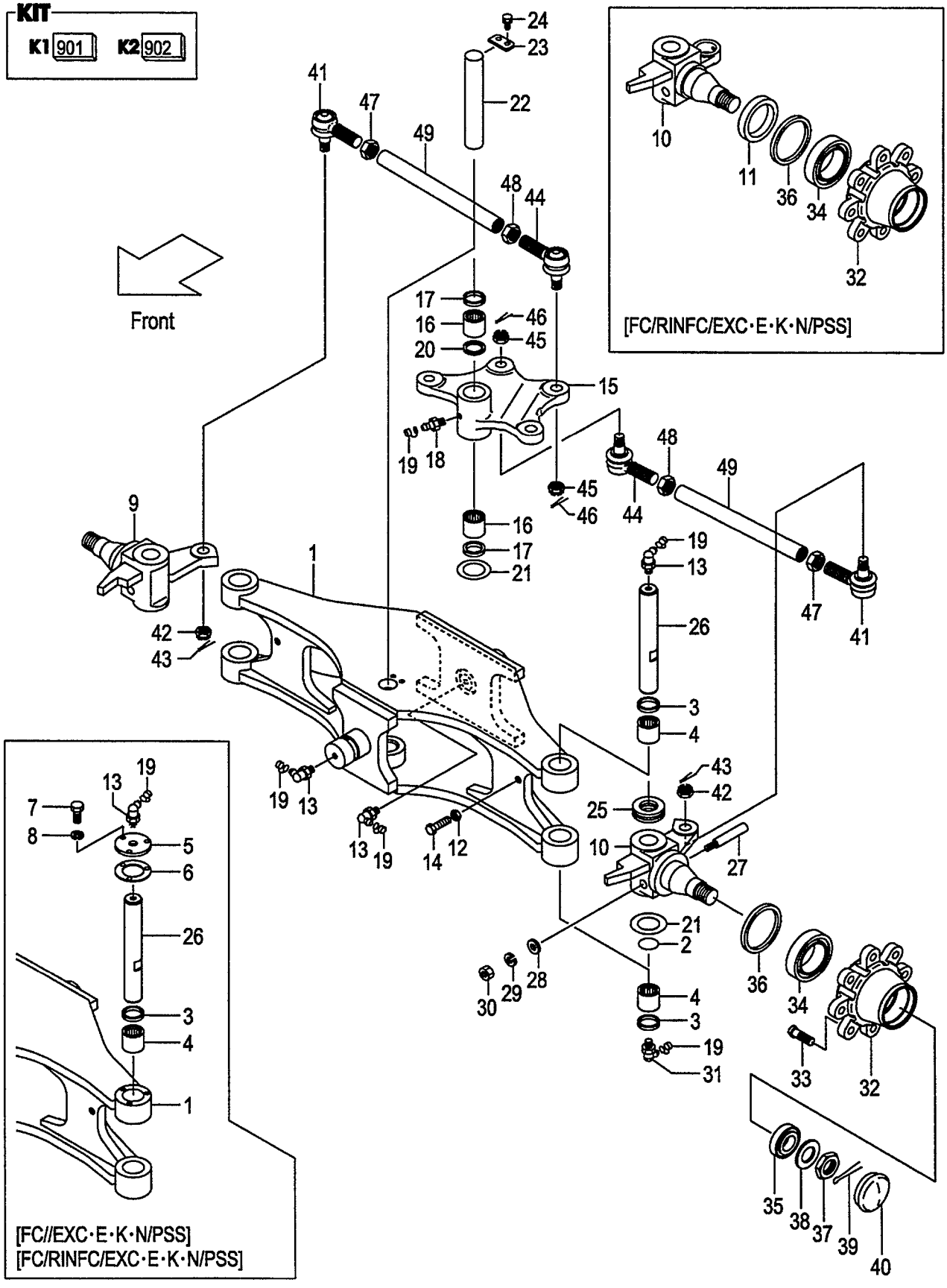

A:FD30C7 FD30T7

Item No	Part No.	Mark	Description		Req'd	Remarks : Serial No.
A1	234A4-30001		AXLE-ASSY,STEERING	ｽﾃｱﾘﾝｸﾞｱｸｽﾙｱｯｾﾝ	1	[EXC&E&K&N/PSS]
						INC.1-4,9,10,12-49
-	534A3-70021		AXLE-ASSY,STEERING	ｽﾃｱﾘﾝｸﾞｱｸｽﾙｱｯｾﾝ	1	[FC/EXC&E&K&N/PSS]
						INC.1-10,12-49
-	534A3-70031		AXLE-ASSY,STEERING	ｽﾃｱﾘﾝｸﾞｱｸｽﾙｱｯｾﾝ	1	[FC/RINFC/EXC&E&K&N/PSS]
						INC.1-49
901	215E4-39801	K1	KIT,REPAIR	ﾘﾍﾟｱｷｯﾄ	1	[EXC&E&K&N/PSS]
						INC.2-4,13,21,25,27-30
902	24454-39812	K2	KIT,REPAIR	ﾘﾍﾟｱｷｯﾄ	1	[EXC&E&K&N/PSS]
						INC.16-18,20,21,23,24
1	234A4-30111		AXLE,STEERING	ｱｸｽﾙ	1	[EXC&E&K&N/PSS]
-	534A3-70101		AXLE,STEERING	ｱｸｽﾙ	1	[FC/EXC&E&K&N/PSS]
						[FC/RINFC/EXC&E&K&N/PSS]
2	23654-32161	*	O-RING	Oﾘﾝｸﾞ	2	[EXC&E&K&N/PSS]
3	214A4-32161	*	SEAL,DUST	ｼｰﾙ	4	[EXC&E&K&N/PSS]
4	03146-13201	*	BRG,NEEDLE	ﾍﾞｱﾘﾝｸﾞ	4	[EXC&E&K&N/PSS]
5	514A3-72052		PLATE,CAP	ﾌﾟﾚｰﾄ	2	[FC/EXC&E&K&N/PSS]
						[FC/RINFC/EXC&E&K&N/PSS]
6	514A3-72062		PACKING	ﾊﾟｯｷﾝｸﾞ	2	[FC/EXC&E&K&N/PSS]
						[FC/RINFC/EXC&E&K&N/PSS]
7	01141-06012		BOLT	ﾎﾞﾙﾄ	6	[FC/EXC&E&K&N/PSS]
						[FC/RINFC/EXC&E&K&N/PSS]
8	02010-10006		WASHER	ﾜｯｼｬ	6	[FC/EXC&E&K&N/PSS]
						[FC/RINFC/EXC&E&K&N/PSS]
9	234A4-32261		KNUCKLE,RH	ﾅｯｸﾙ	1	[EXC&E&K&N/PSS]
-	534A3-72111		KNUCKLE,RH	ﾅｯｸﾙ	1	[FC/RINFC/EXC&E&K&N/PSS]
10	234A4-32271		KNUCKLE,LH	ﾅｯｸﾙ	1	[EXC&E&K&N/PSS]
-	534A3-72121		KNUCKLE,LH	ﾅｯｸﾙ	1	[FC/RINFC/EXC&E&K&N/PSS]
11	514A3-72211		SEAT,OIL-SEAL	ｼｰﾄ	2	[FC/RINFC/EXC&E&K&N/PSS]
12	01402-00012		NUT	ﾅｯﾄ	2	[EXC&E&K&N/PSS]
13	04901-00190	*	FITTING	ﾌｨｯﾃｨﾝｸﾞ	4	[EXC&E&K&N/PSS]
14	01100-12030		BOLT	ﾎﾞﾙﾄ	2	[EXC&E&K&N/PSS]
15	24454-30512		ARM,CENTER	ｱｰﾑ	1	[EXC&E&K&N/PSS]
16	03146-13201	*	BRG,NEEDLE	ﾍﾞｱﾘﾝｸﾞ	2	[EXC&E&K&N/PSS]
17	23654-32081	*	SEAL,DUST	ｼｰﾙ	2	[EXC&E&K&N/PSS]
18	04901-00100	*	FITTING	ﾌｨｯﾃｨﾝｸﾞ	1	[EXC&E&K&N/PSS]
19	22199-12401		CAP,NIPPLE	ｷｬｯﾌﾟ	7	[EXC&E&K&N/PSS]
20	24454-32391	*	SPACER	ｽﾍﾟｰｻ	1	[EXC&E&K&N/PSS]
21	22214-30321	*	SHIM	ｼﾑ	7	[EXC&E&K&N/PSS]
22	24454-32161		PIN,CENTER-ARM	ﾋﾟﾝ	1	[EXC&E&K&N/PSS]
23	20224-30061	*	PLATE,SET	ﾌﾟﾚｰﾄ	1	[EXC&E&K&N/PSS]
24	01183-08016	*	BOLT	ﾎﾞﾙﾄ	2	[EXC&E&K&N/PSS]
25	03126-83201	*	BRG,THRUST	ﾍﾞｱﾘﾝｸﾞ	2	[EXC&E&K&N/PSS]
26	24454-32232		KINGPIN	ｷﾝｸﾞﾋﾟﾝ	2	[EXC&E&K&N/PSS]
-	514A3-72201		KINGPIN	ｷﾝｸﾞﾋﾟﾝ	2	[FC/EXC&E&K&N/PSS]
						[FC/RINFC/EXC&E&K&N/PSS]
27	215E4-32341	*	PIN,LOCK	ﾋﾟﾝ	2	[EXC&E&K&N/PSS]
28	02000-00010	*	WASHER	ﾜｯｼｬ	2	[EXC&E&K&N/PSS]
29	02010-00010	*	WASHER	ﾜｯｼｬ	2	[EXC&E&K&N/PSS]
30	01400-00010	*	NUT	ﾅｯﾄ	2	[EXC&E&K&N/PSS]

FIG.74 STEERING AXLE [(EXC,EXE,EXK,EXN)/PSS]

(F6034330) ステアリングアクスル

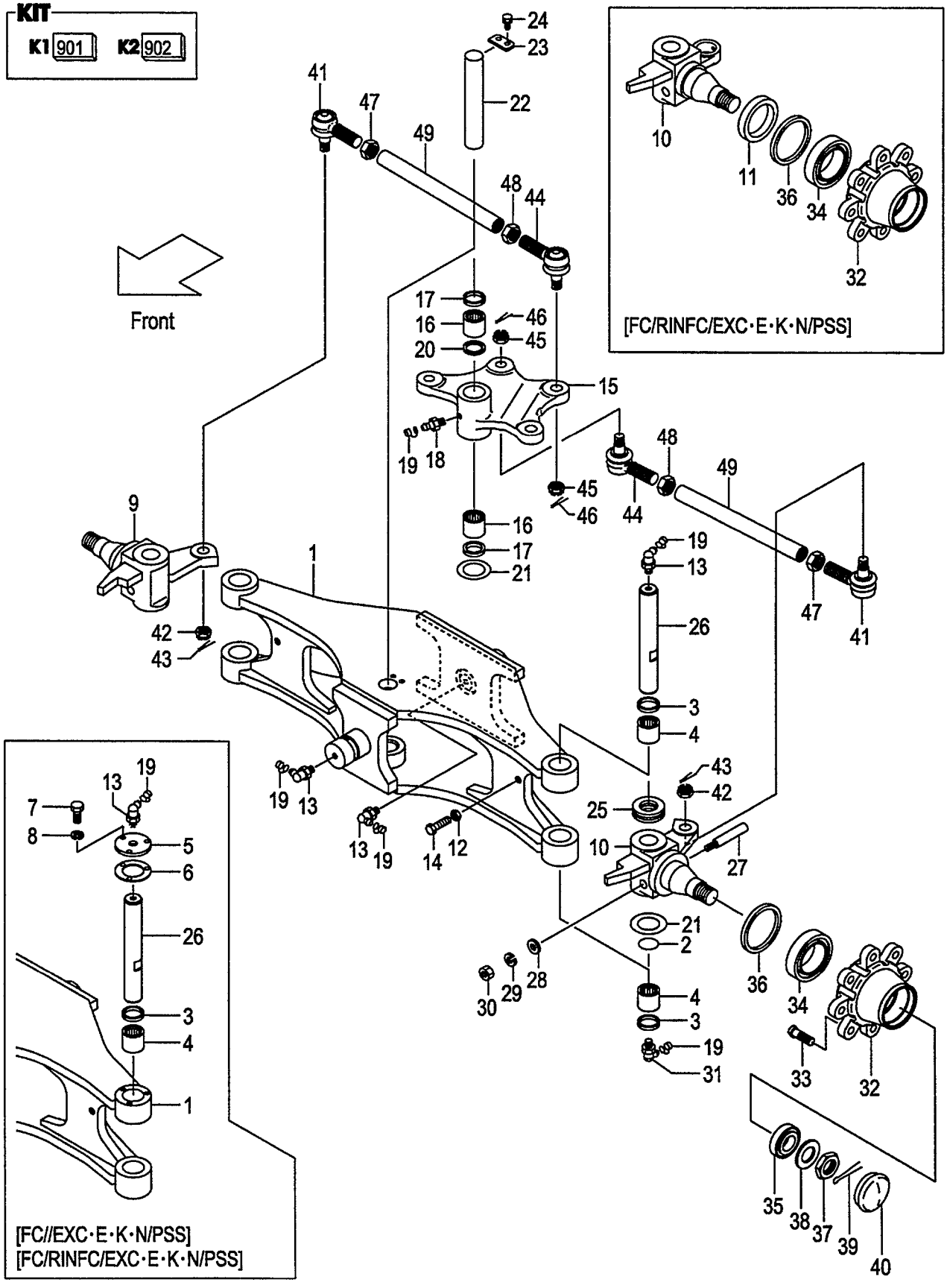

A:FD30C7 FD30T7

Item No	Part No.	Mark	Description		Req'd	Remarks : Serial No.
31	04901-00191		FITTING	ﾌｨｯﾃｨﾝｸﾞ	2	[EXC&E&K&N/PSS]
32	214A4-32041		HUB,REAR	ﾊﾌﾞ	2	[EXC&E&K&N/PSS]
33	23654-32041		BOLT,HUB	ﾎﾞﾙﾄ	16	[EXC&E&K&N/PSS]
34	03071-30211		BRG,TAPER-ROLLER	ﾍﾞｱﾘﾝｸﾞ	2	[EXC&E&K&N/PSS]
35	03071-30207		BRG,TAPER-ROLLER	ﾍﾞｱﾘﾝｸﾞ	2	[EXC&E&K&N/PSS]
36	03217-08501		SEAL,OIL	ｼｰﾙ	2	[EXC&E&K&N/PSS]
37	01412-00030		NUT,CASTLE	ﾅｯﾄ	2	[EXC&E&K&N/PSS]
38	02000-00030		WASHER	ﾜｯｼｬ	2	[EXC&E&K&N/PSS]
39	02200-06055		PIN,COTTER	ﾋﾟﾝ	2	[EXC&E&K&N/PSS]
40	214A4-32051		CAP	ｷｬｯﾌﾟ	2	[EXC&E&K&N/PSS]
A2	24234-30551		END-ASSY,ROD,RH	ｴﾝﾄﾞｱｯｾﾝ	2	[EXC&E&K&N/PSS] INC.41-43
41	NO PART NO.	#	END,ROD,RH	ｴﾝﾄﾞ	2	[EXC&E&K&N/PSS]
42	01412-10016		NUT,CASTLE	ﾅｯﾄ	2	[EXC&E&K&N/PSS]
43	02200-32032		PIN,COTTER	ﾋﾟﾝ	2	[EXC&E&K&N/PSS]
A3	24234-30561		END-ASSY,ROD,LH	ｴﾝﾄﾞｱｯｾﾝ	2	[EXC&E&K&N/PSS] INC.44-46
44	NO PART NO.	#	END,ROD,LH	ｴﾝﾄﾞ	2	[EXC&E&K&N/PSS]
45	01412-10016		NUT,CASTLE	ﾅｯﾄ	2	[EXC&E&K&N/PSS]
46	02200-32032		PIN,COTTER	ﾋﾟﾝ	2	[EXC&E&K&N/PSS]
47	24234-32411		NUT,RH	ﾅｯﾄ	2	[EXC&E&K&N/PSS]
48	24234-32421		NUT,LH	ﾅｯﾄ	2	[EXC&E&K&N/PSS]
49	214A4-32131		ROD,TIE	ﾛｯﾄﾞ	2	[EXC&E&K&N/PSS]

FIG.75 AXLE SUPPORT

(F6034360) アクスルサポート

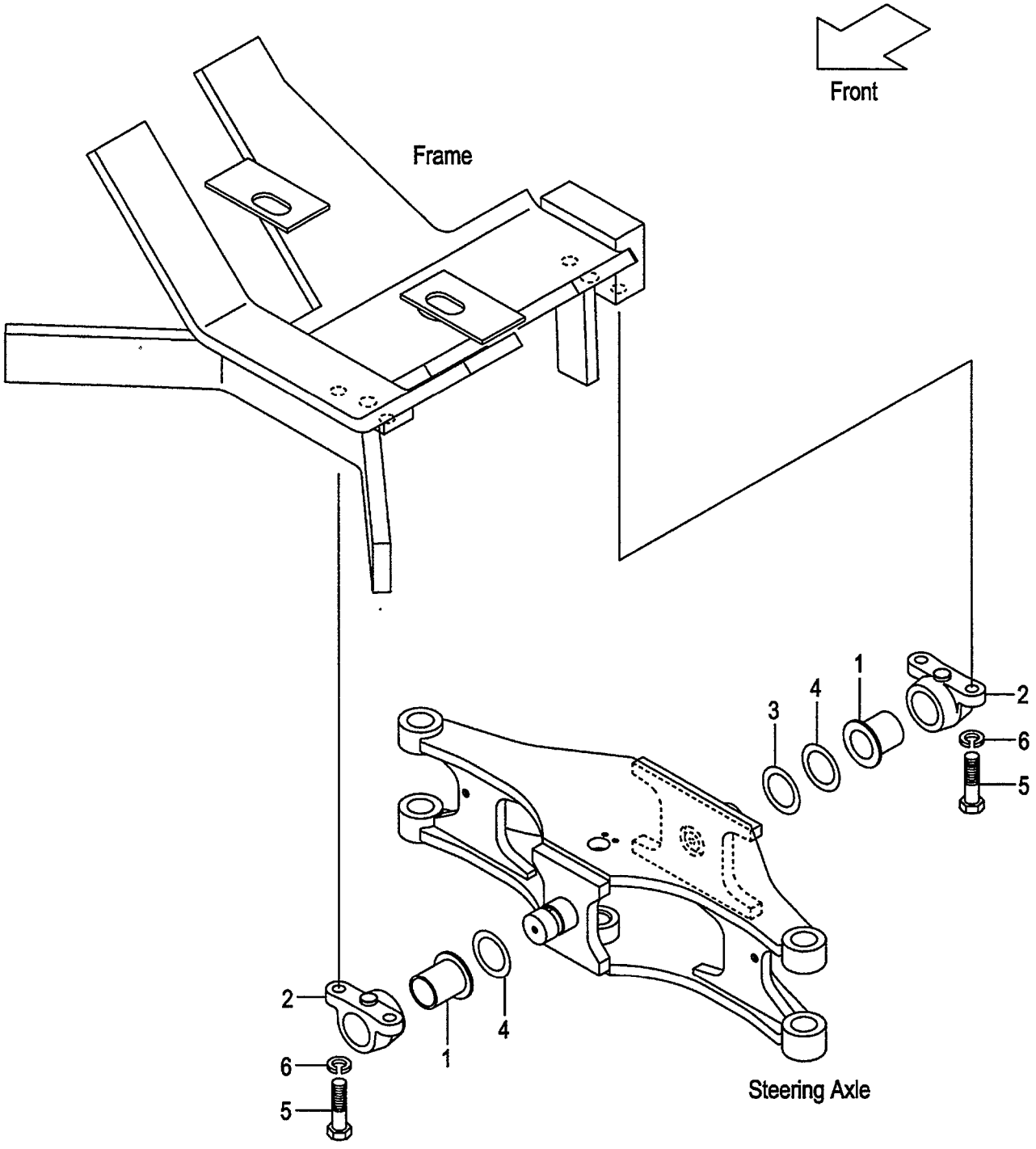

FIG.75
(F6034360)

A:FD30C7 FD30T7 FD30W7

Item No	Part No.	Mark	Description		Req'd	Remarks : Serial No.
1	214A6-12601		BUSHING	ﾌﾞｯｼﾝｸﾞ	2	
2	238G6-12401		SUPPORT,REAR-AXLE	ｻﾎﾟｰﾄ	2	
3	214A4-32201		SHIM,T-0.5	ｼﾑ	1	
4	214A4-32211		SHIM,T-1.0	ｼﾑ	2	
5	01100-16045		BOLT	ﾎﾞﾙﾄ	4	
6	02010-00016		WASHER	ﾜｯｼｬ	4	

FIG.76 HUB NUT
(F6034410) ﾊﾌﾞﾅｯﾄ

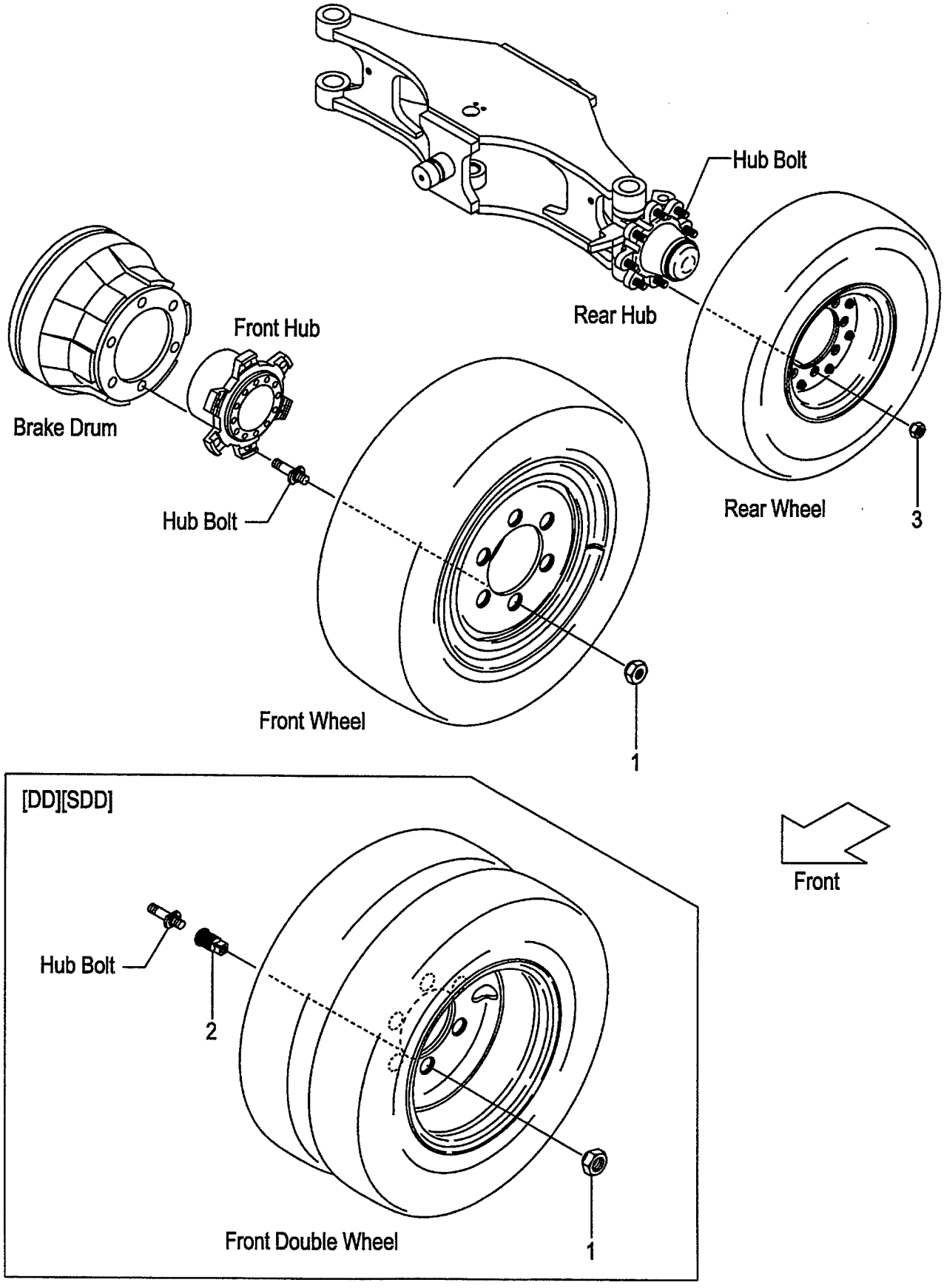

FIG.76
(F6034410)

A:FD30C7 FD30T7 FD30W7

Item No	Part No.	Mark	Description	Req'd	Remarks : Serial No.
1	23913-02041		NUT,HUB ナット	12	(FRONT)
-	514J3-72051		NUT,HUB ナット	12	[FC](FRONT)
-	23813-00081		NUT,HUB ナット	12	[DD][SDD](FRONT)
-	514A3-72101		NUT,HUB ナット	12	[FC/DD][FC/SDD](FRONT)
2	23813-00071		NUT,INNER ナット	12	[DD][SDD][FC/DD][FC/SDD] (FRONT)
3	23654-34051		NUT,HUB ナット	16	(REAR)
-	57045-52151		NUT,HUB ナット	16	[FC](REAR)

FIG.77 FENDER [DD][SDD][TUJSF]

(F6034420) ﾌｪﾝﾀﾞ

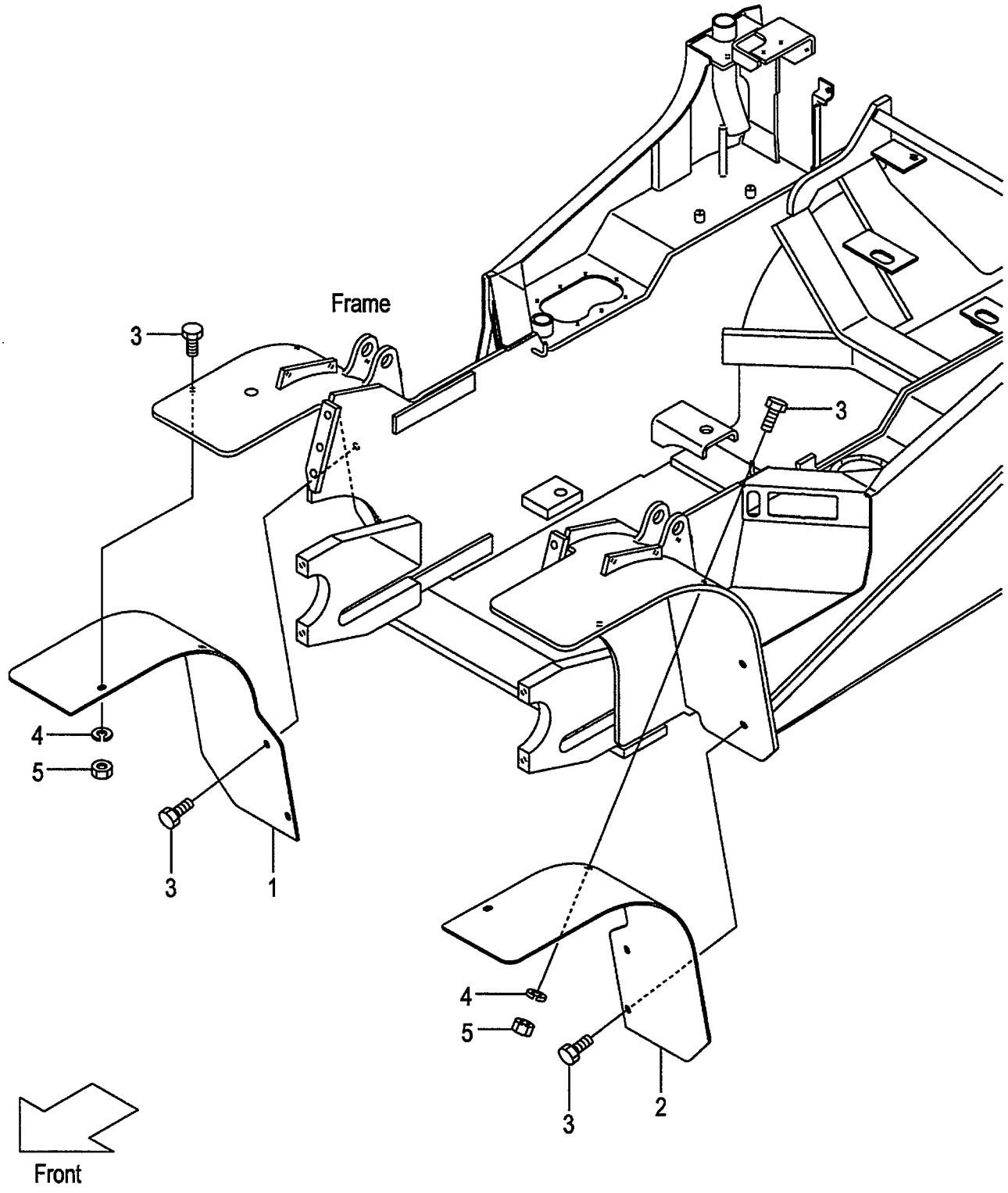

FIG.77
(F6034420)

A:FD30C7 FD30T7 FD30W7

Item No	Part No.	Mark	Description		Req'd	Remarks : Serial No.
1	539A7-42001		FENDER,FRONT,RH	ﾌｪﾝﾀﾞ	1	[DD]
-	539F7-42021		FENDER,FRONT,RH	ﾌｪﾝﾀﾞ	1	[SDD]
-	539F7-42061		FENDER,FRONT,RH	ﾌｪﾝﾀﾞ	1	[TUJSF]
2	539A7-42011		FENDER,FRONT,LH	ﾌｪﾝﾀﾞ	1	[DD]
-	539F7-42031		FENDER,FRONT,LH	ﾌｪﾝﾀﾞ	1	[SDD]
-	539F7-42071		FENDER,FRONT,LH	ﾌｪﾝﾀﾞ	1	[TUJSF]
3	01186-10030		BOLT	ﾎﾞﾙﾄ	8	[DD][SDD][TUJSF]
4	02000-00010		WASHER	ﾜｯｼｬ	4	[DD][SDD][TUJSF]
5	01400-00010		NUT	ﾅｯﾄ	4	[DD][SDD][TUJSF]

FIG.78 FRONT WHEEL
(F6034430) フロントホイール

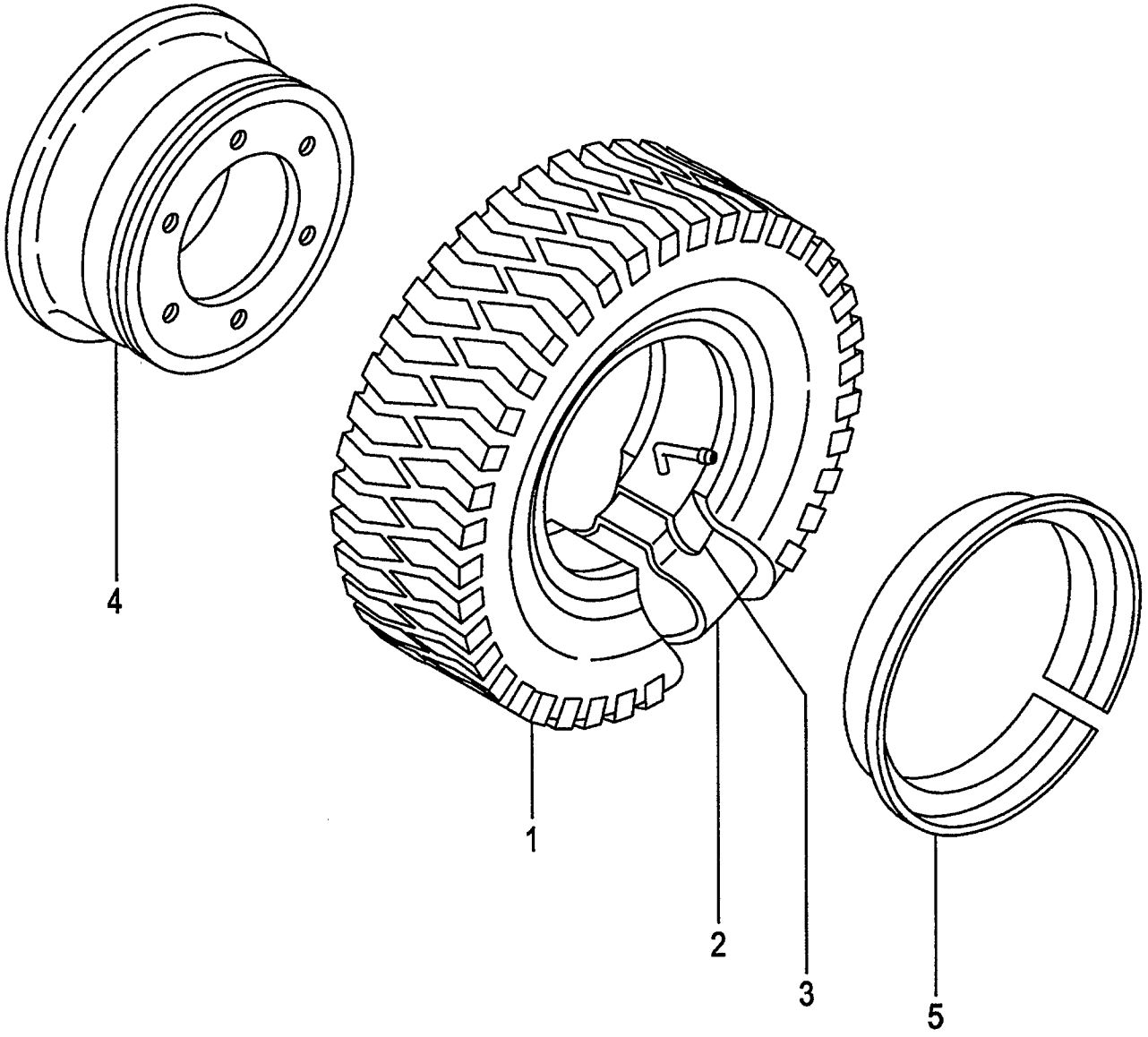

A:FD30C7 FD30T7 FD30W7

Item No	Part No.	Mark	Description		Req'd	Remarks : Serial No.
A1	24454-40201		WHEEL-ASSY,FRONT	ﾌﾛﾝﾄﾎｲｰﾙｱｯｾﾝ	2	INC.1-5
A2	24454-40211		TIRE-ASSY	ﾀｲﾔｱｯｾﾝ	2	INC.1-3
1	52436-82101		TIRE,28-9-15-12	ﾀｲﾔ	2	
2	52436-82111		TUBE,28-9-15-12T	ﾁｭｰﾌﾞ	2	
3	52436-82121		FLAP,28-9-15-12F	ﾌﾗｯﾌﾟ	2	
A3	24454-40221		RIM-ASSY,700T-15	ﾘﾑｱｯｾﾝ	2	INC.4,5
4	NO PART NO.	#	RIM & DISK	ﾘﾑ & ﾃﾞｨｽｸ	2	
5	22439-44031		RING,SIDE	ﾘﾝｸﾞ	2	

FIG.79 FRONT WHEEL [TJ F][TJSF][TS F]

(F6034450) フロントホイール

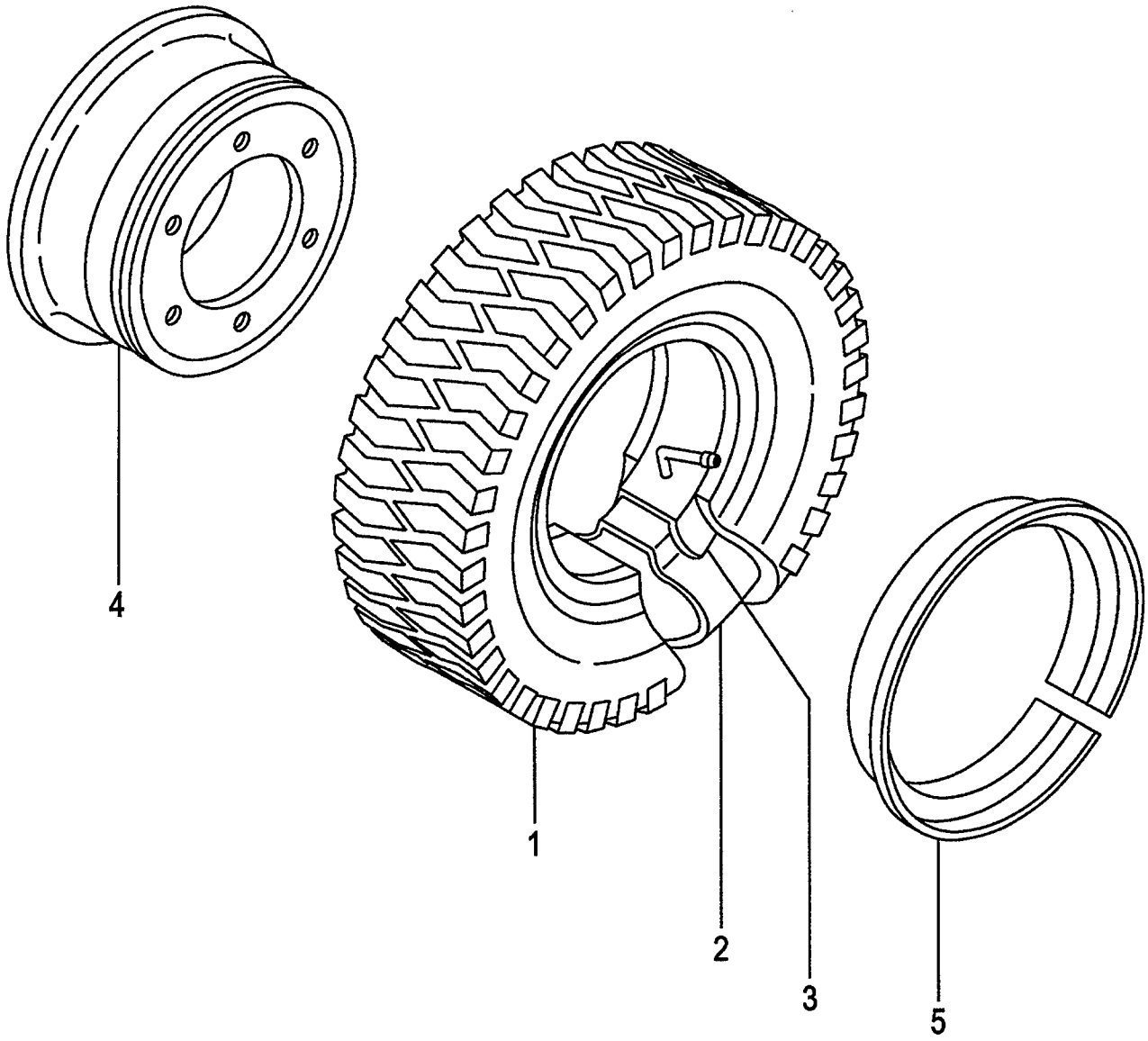

FIG.79
(F6034450)

A:FD30C7 FD30T7 FD30W7

Item No	Part No.	Mark	Description		Req'd	Remarks : Serial No.
A1	24454-40201		WHEEL-ASSY,FRONT	ﾌﾛﾝﾄﾎｲｰﾙｱｯｾﾝ	2	[TJ F] INC.1-5
-	539F7-40401		WHEEL-ASSY,FRONT	ﾌﾛﾝﾄﾎｲｰﾙｱｯｾﾝ	2	[TJSF] INC.1-5
-	539F7-40601		WHEEL-ASSY,FRONT	ﾌﾛﾝﾄﾎｲｰﾙｱｯｾﾝ	2	[TS F] INC.1-5
A2	24454-40211		TIRE-ASSY	ﾀｲﾔｱｯｾﾝ	2	[TJ F] INC.1-3
1	52436-82101		TIRE,28-9-15-12	ﾀｲﾔ	2	[TJ F]
-	06005-81515		TIRE,28-9-15-12	ﾀｲﾔ	2	[TJSF]
-	06007-81515		TIRE,28-9-15-12	ﾀｲﾔ	2	[TS F]
2	52436-82111		TUBE,28-9-15-12T	ﾁｭｰﾌﾞ	2	[TJ F][TJSF][TS F]
3	52436-82121		FLAP,28-9-15-12F	ﾌﾗｯﾌﾟ	2	[TJ F][TJSF][TS F]
A3	24454-40221		RIM-ASSY,700T-15	ﾘﾑｱｯｾﾝ	2	[TJ F][TJSF][TS F] INC.4,5
4	NO PART NO.	#	RIM & DISK	ﾘﾑ & ﾃﾞｨｽｸ	2	[TJ F][TJSF][TS F]
5	22439-44031		RING,SIDE	ﾘﾝｸﾞ	2	[TJ F][TJSF][TS F]

FIG.80 FRONT WHEEL [TUJF][TUSF][TUWF][TUGF]

(F6034470) フロントホイール

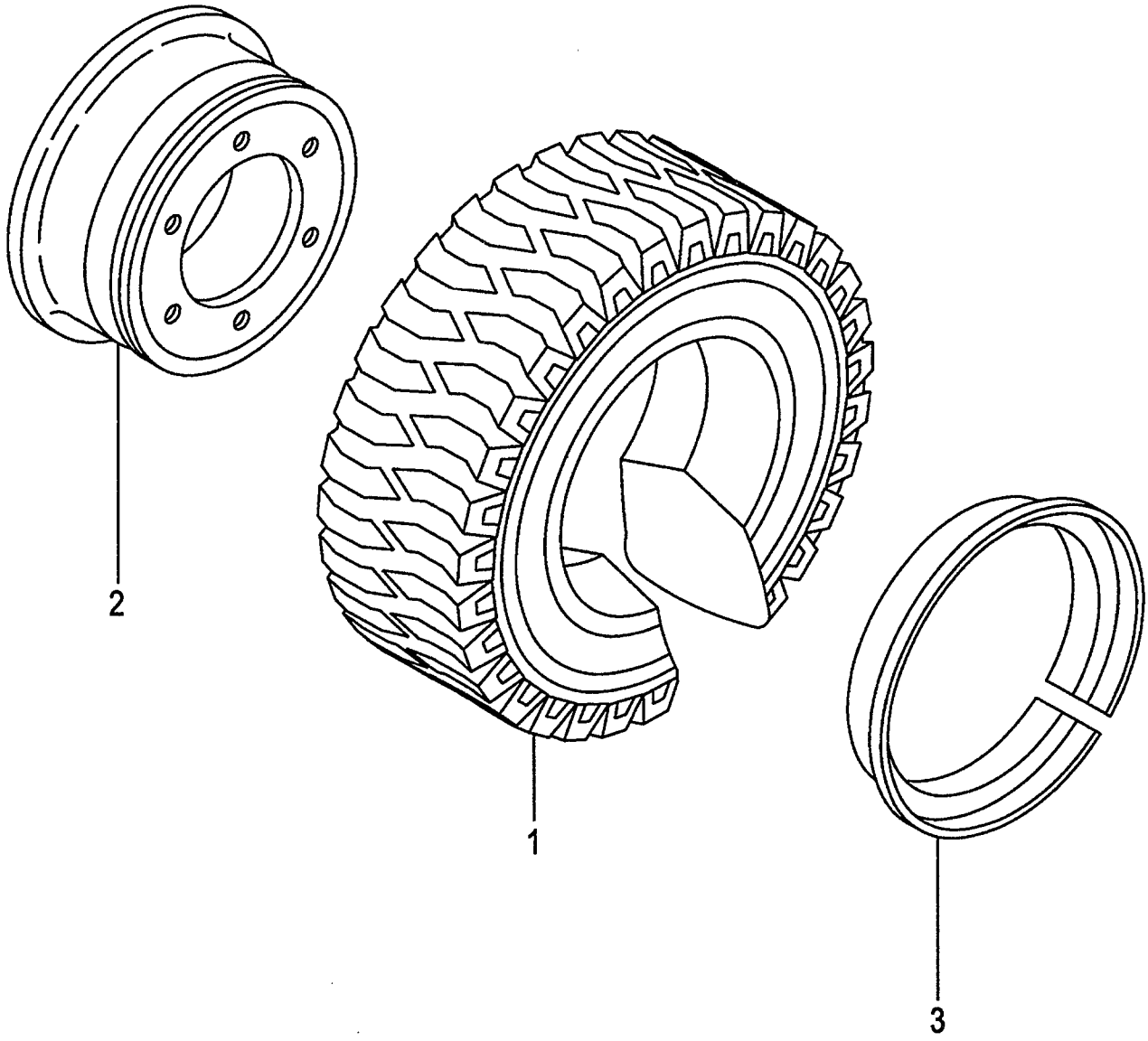

A:FD30C7 FD30T7
B:FD30W7

FIG.80
(F6034470)

Item No	Part No.	Mark	Description		Req'd	Remarks : Serial No.
A1	534F7-40502		WHEEL-ASSY,FRONT	ﾌﾛﾝﾄﾎｲｰﾙｱｯｾﾝ	2	[TUJF] INC.1-3
-	534F7-40502		WHEEL-ASSY,FRONT	ﾌﾛﾝﾄﾎｲｰﾙｱｯｾﾝ	2	A [TUJF/EX] INC.1-3
-	534F6-80422		WHEEL-ASSY,FRONT	ﾌﾛﾝﾄﾎｲｰﾙｱｯｾﾝ	2	[TUSF] INC.1-3
-	534F6-80402		WHEEL-ASSY,FRONT	ﾌﾛﾝﾄﾎｲｰﾙｱｯｾﾝ	2	[TUWF] INC.1-3
-	534F6-80412		WHEEL-ASSY,FRONT	ﾌﾛﾝﾄﾎｲｰﾙｱｯｾﾝ	2	[TUGF] INC.1-3
1	06806-81515		TIRE,UNIQUE,28-9-15	ﾀｲﾔ	2	[TUJF]
-	06807-81515		TIRE,UNIQUE,28-9-15	ﾀｲﾔ	2	[TUJF]
-	06807-81515		TIRE,UNIQUE,28-9-15	ﾀｲﾔ	2	A [TUJF/EX]
-	522Q6-82021		TIRE,SOFTONE,28-9-15	ﾀｲﾔ	2	[TUSF]
-	522Q6-82001		TIRE,WHITE,28-9-15	ﾀｲﾔ	2	[TUWF]
-	522Q6-82011		TIRE,GREEN,28-9-15	ﾀｲﾔ	2	[TUGF]
A2	54456-82201		RIM-ASSY,700T-15	ﾘﾑｱｯｾﾝ	2	[TUJF][TUSF][TUWF][TUGF] INC.2,3
2	NO PART NO.	#	RIM & DISK	ﾘﾑ & ﾃﾞｨｽｸ	2	[TUJF][TUSF][TUWF][TUGF]
3	54456-82224		RING,SIDE	ﾘﾝｸﾞ	2	[TUJF][TUSF][TUWF][TUGF]

FIG.81 FRONT WHEEL [TRAF]

(F6034490) フロントホイール

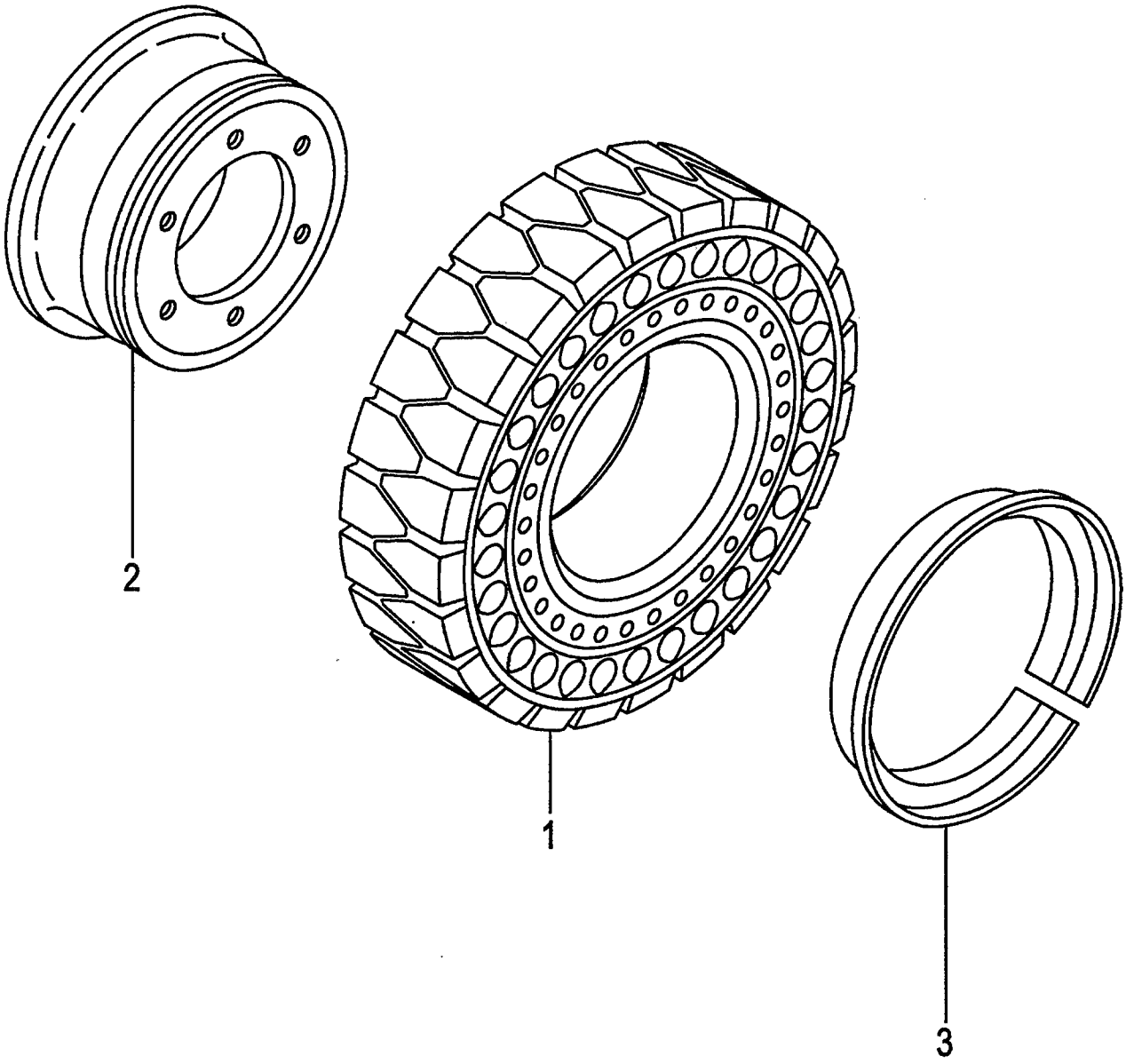

A:FD30C7 FD30T7 FD30W7

Item No	Part No.	Mark	Description		Req'd	Remarks : Serial No.
A1	534F6-80171		WHEEL-ASSY,FRONT	ﾌﾛﾝﾄﾎｲｰﾙｱｯｾﾝ	2	[TRAF] INC.1-3
1	534F6-85001		TIRE,AIR-BOSS,650-10	ﾀｲﾔ	2	[TRAF]
A2	54456-82201		RIM-ASSY,700T-15	ﾘﾑｱｯｾﾝ	2	[TRAF] INC.2,3
2	NO PART NO.	#	RIM & DISK	ﾘﾑ & ﾃﾞｨｽｸ	2	[TRAF]
3	54456-82224		RING,SIDE	ﾘﾝｸﾞ	2	[TRAF]

FIG.82 FRONT WHEEL [TUJSF]

(F60344A0) フロントホイール

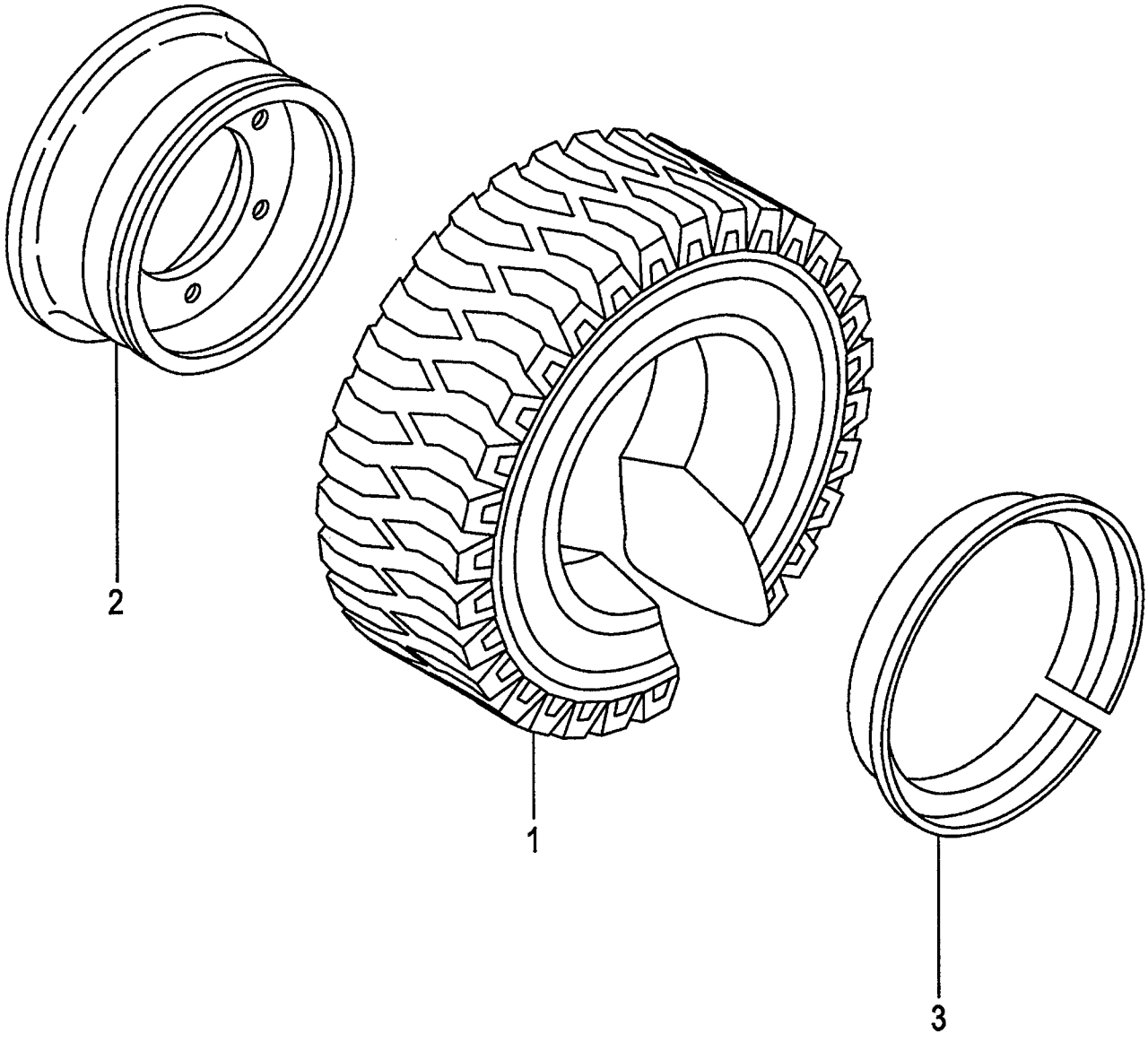

A:FD30C7 FD30T7 FD30W7

Item No	Part No.	Mark	Description		Req'd	Remarks : Serial No.
A1	534F6-83002		WHEEL-ASSY,FRONT	フロントホイールアッセン	2	[TUJSF] INC.1-3
1	52436-82151		TIRE,UNIQUE,28-9-15	タイヤ	2	[TUJSF]
A2	63056-56501		RIM-ASSY,700T-15	リムアッセン	2	[TUJSF] INC.2,3
2	NO PART NO.	#	RIM & DISK	リム & ディスク	2	[TUJSF]
3	514T6-82021		RING,SIDE	リング	2	[TUJSF]

FIG.83 FRONT WHEEL [TJ W][TJSW][TS W]

(F60344B0) フロントホイール

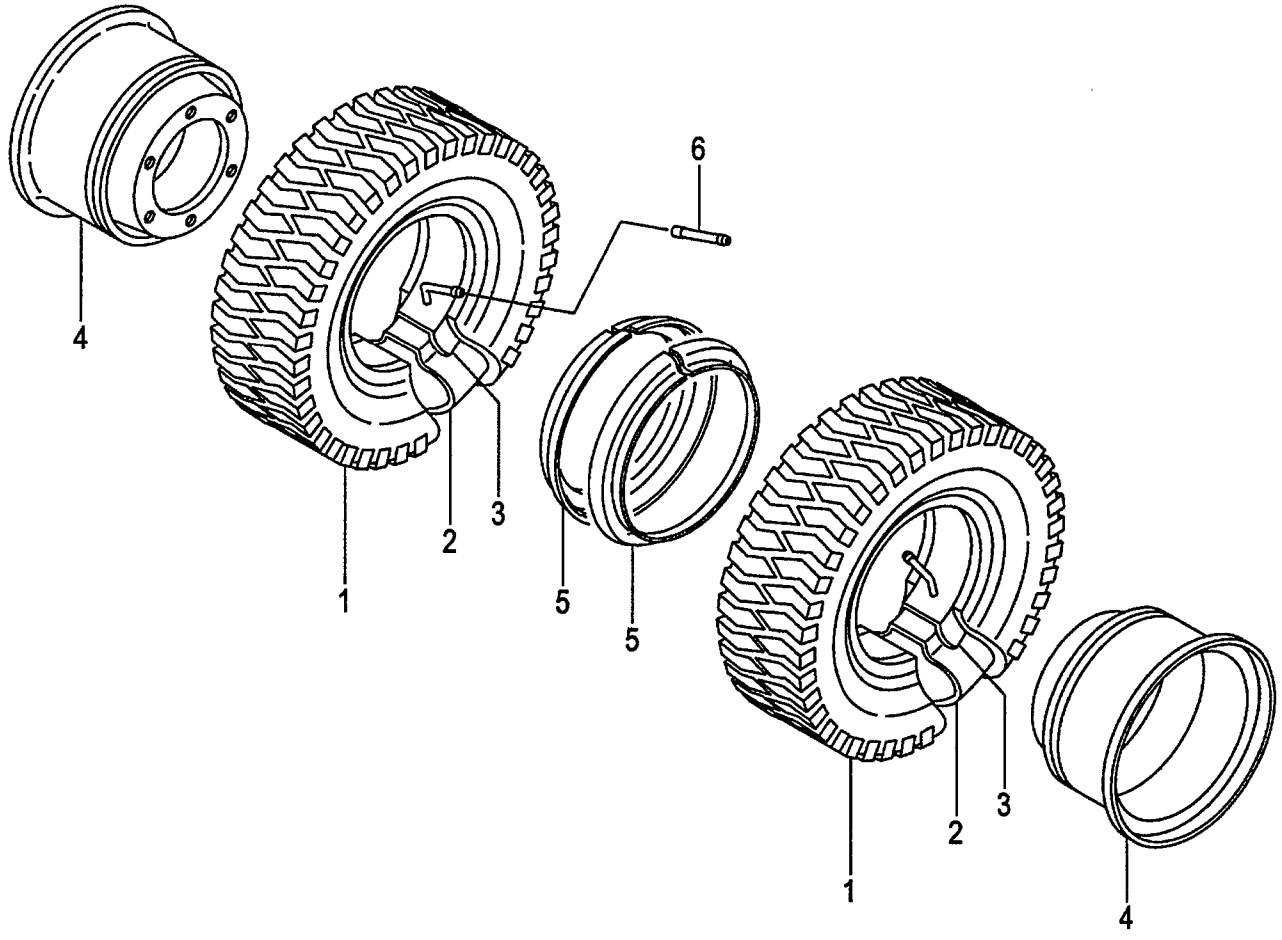

A:FD30C7 FD30T7 FD30W7

Item No	Part No.	Mark	Description		Req'd	Remarks : Serial No.
A1	54456-80421		WHEEL-ASSY,FRONT	ﾌﾛﾝﾄﾎｲｰﾙｱｯｾﾝ	4	[TJ W] INC.1-5
-	539F7-40501		WHEEL-ASSY,FRONT	ﾌﾛﾝﾄﾎｲｰﾙｱｯｾﾝ	4	[TJSW] INC.1-5
-	539F7-40701		WHEEL-ASSY,FRONT	ﾌﾛﾝﾄﾎｲｰﾙｱｯｾﾝ	4	[TS W] INC.1-5
1	06006-60015		TIRE,600-15-10	ﾀｲﾔ	4	[TJ W]
-	06005-60015		TIRE,600-15-10	ﾀｲﾔ	4	[TJSW]
-	06007-60015		TIRE,600-15-10	ﾀｲﾔ	4	[TS W]
2	06711-60015		TUBE,600-15-10T	ﾁｭｰﾌﾞ	4	[TJ W][TJSW][TS W]
3	06710-60015		FLAP,600-15-10F	ﾌﾗｯﾌﾟ	4	[TJ W][TJSW][TS W]
A2	53657-42053		RIM-ASSY,450E-15	ﾘﾑｱｯｾﾝ	4	[TJ W][TJSW][TS W] INC.4,5
4	NO PART NO.	#	RIM & DISK	ﾘﾑ & ﾃﾞｨｽｸ	4	[TJ W][TJSW][TS W]
5	53457-42151		RING,SIDE	ﾘﾝｸﾞ	4	[TJ W][TJSW][TS W]
6	06731-00120		TUBE,EXTENSION	ﾁｭｰﾌﾞ	2	[TJ W][TJSW][TS W]

FIG.84 FRONT WHEEL [TUJW][TUSW][TUWW][TUGW]

(F60344C0) フロントホイール

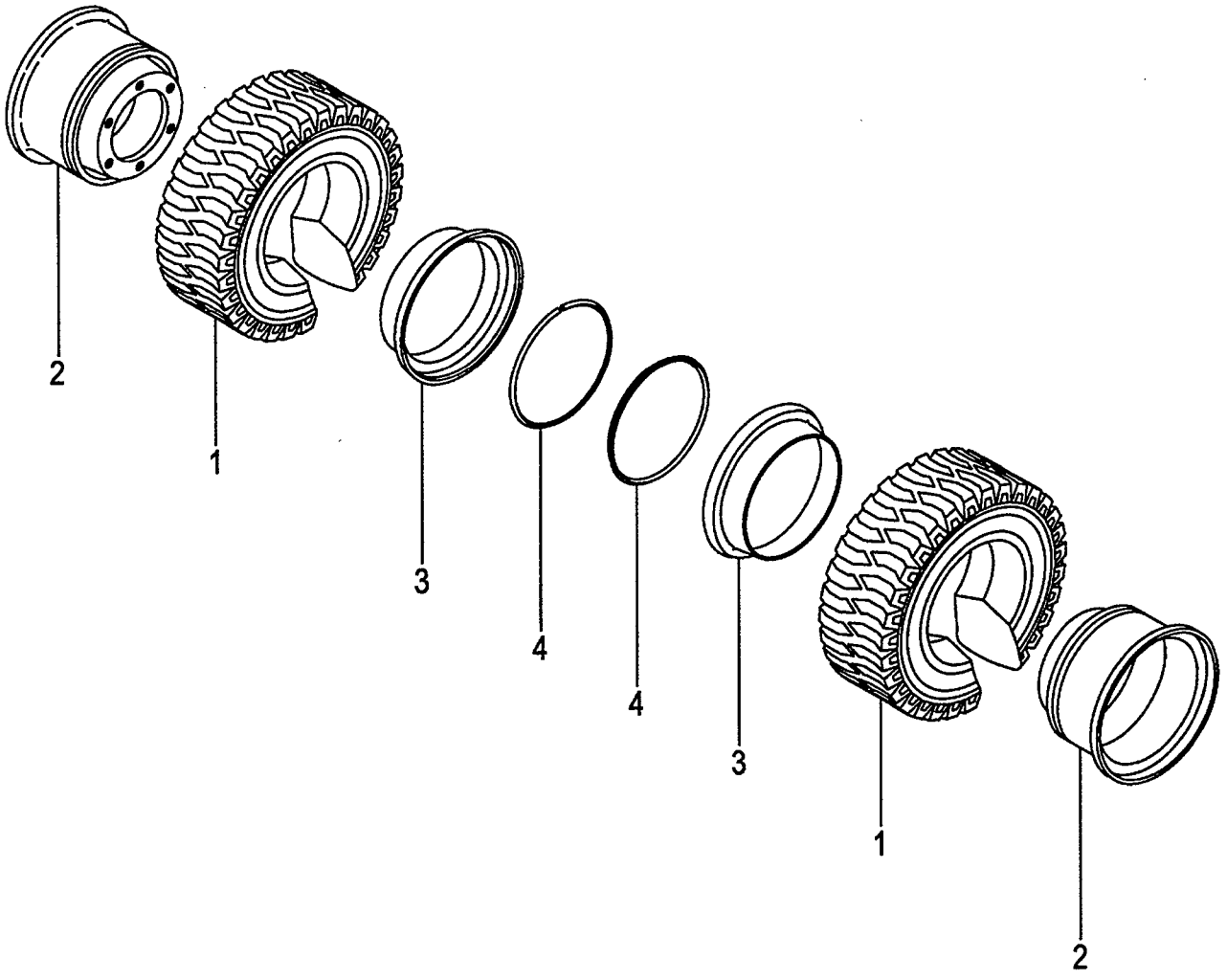

A:FD30C7 FD30T7 FD30W7

Item No	Part No.	Mark	Description		Req'd	Remarks : Serial No.
A1	54457-40201		WHEEL-ASSY,FRONT	ﾌﾛﾝﾄﾎｲｰﾙｱｯｾﾝ	4	[TUJW] INC.1-4
-	522Q6-80321		WHEEL-ASSY,FRONT	ﾌﾛﾝﾄﾎｲｰﾙｱｯｾﾝ	4	[TUSW] INC.1-4
-	522Q6-80301		WHEEL-ASSY,FRONT	ﾌﾛﾝﾄﾎｲｰﾙｱｯｾﾝ	4	[TUWW] INC.1-4
-	522Q6-80311		WHEEL-ASSY,FRONT	ﾌﾛﾝﾄﾎｲｰﾙｱｯｾﾝ	4	[TUGW] INC.1-4
1	06806-60015		TIRE,UNIQUE,600-15	ﾀｲﾔ	4	[TUJW]
-	06851-60015		TIRE,SOFTONE,600-15	ﾀｲﾔ	4	[TUSW]
-	06841-60015		TIRE,WHITE,600-15	ﾀｲﾔ	4	[TUWW]
-	06843-60015		TIRE,GREEN,600-15	ﾀｲﾔ	4	[TUGW]
A2	53656-82001		RIM-ASSY,450E-15	ﾘﾑｱｯｾﾝ	4	[TUJW][TUSW][TUWW][TUGW] INC.2-4
2	NO PART NO.	#	RIM	ﾘﾑ	4	[TUJW][TUSW][TUWW][TUGW]
3	53456-82052		RING,SIDE	ﾘﾝｸﾞ	4	[TUJW][TUSW][TUWW][TUGW]
4	53456-82062		RING,LOCK	ﾘﾝｸﾞ	4	[TUJW][TUSW][TUWW][TUGW]

FIG.85 FRONT WHEEL [TJ W28][TJSW28][TS W28]

(F60344D0) フロントホイール

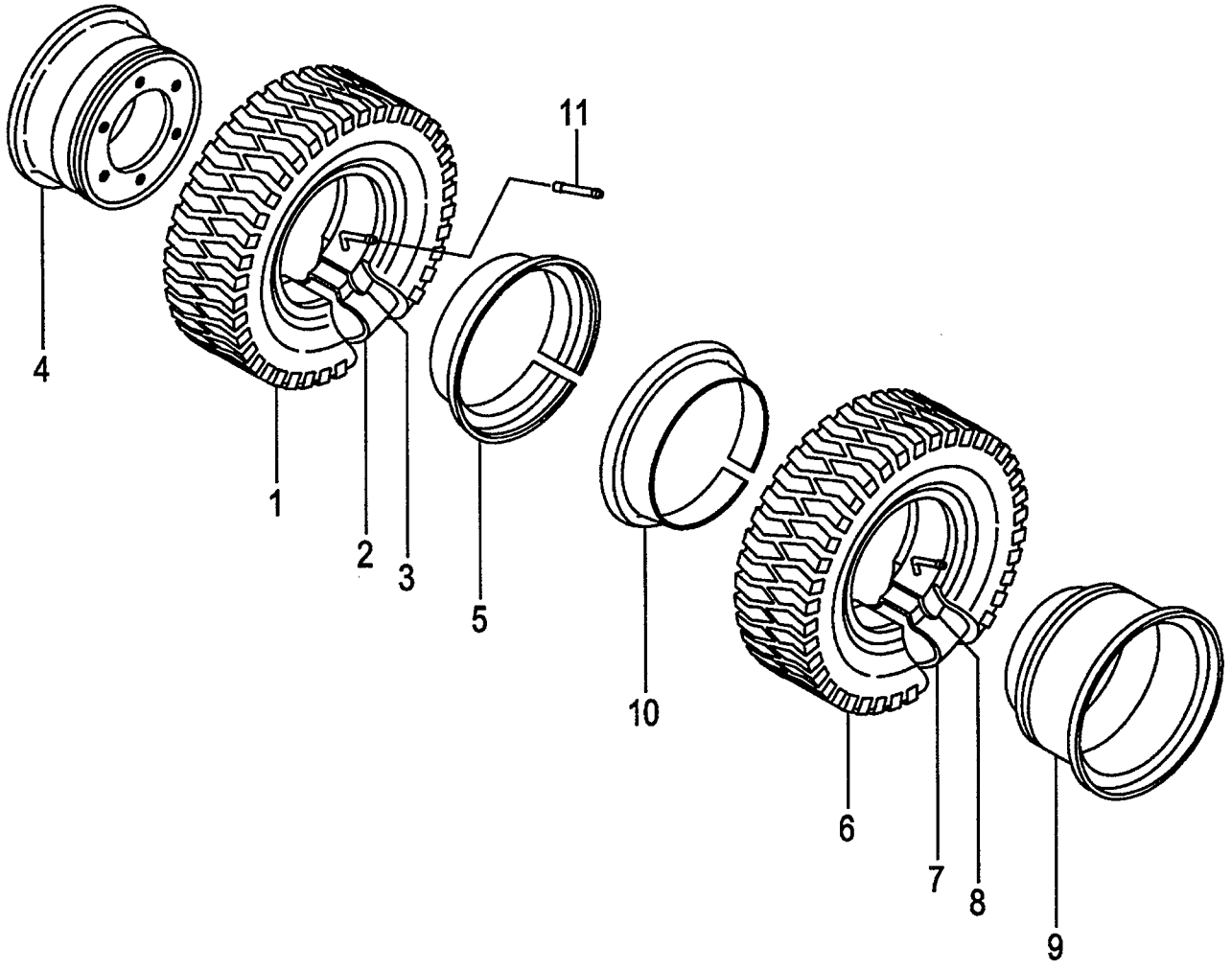

A:FD30C7 FD30T7 FD30W7

Item No	Part No.	Mark	Description		Req'd	Remarks : Serial No.
A1	24454-40201		WHEEL-ASSY,FRONT	ﾌﾛﾝﾄﾎｲｰﾙｱｯｾﾝ	2	[TJ W28] INC.1-5
-	539F7-40401		WHEEL-ASSY,FRONT	ﾌﾛﾝﾄﾎｲｰﾙｱｯｾﾝ	2	[TJSW28] INC.1-5
-	539F7-40601		WHEEL-ASSY,FRONT	ﾌﾛﾝﾄﾎｲｰﾙｱｯｾﾝ	2	[TS W28] INC.1-5
A2	24454-40211		TIRE-ASSY	ﾀｲﾔｱｯｾﾝ	2	[TJ W28] INC.1-3
1	52436-82101		TIRE,28-9-15-12	ﾀｲﾔ	2	[TJ W28]
-	06005-81515		TIRE,28-9-15-12	ﾀｲﾔ	2	[TJSW28]
-	06007-81515		TIRE,28-9-15-12	ﾀｲﾔ	2	[TS W28]
2	52436-82111		TUBE,28-9-15-12T	ﾁｭｰﾌﾞ	2	[TJ W28][TJSW28][TS W28]
3	52436-82121		FLAP,28-9-15-12F	ﾌﾗｯﾌﾟ	2	[TJ W28][TJSW28][TS W28]
A3	24454-40221		RIM-ASSY,700T-15	ﾘﾑｱｯｾﾝ	2	[TJ W28][TJSW28][TS W28] INC.4,5
4	NO PART NO.	#	RIM	ﾘﾑ	2	[TJ W28][TJSW28][TS W28]
5	22439-44031		RING,SIDE	ﾘﾝｸﾞ	2	[TJ W28][TJSW28][TS W28]
A4	54456-80201		WHEEL-ASSY,FRONT	ﾌﾛﾝﾄﾎｲｰﾙｱｯｾﾝ	2	[TJ W28] INC.6-10
-	539F7-40411		WHEEL-ASSY,FRONT	ﾌﾛﾝﾄﾎｲｰﾙｱｯｾﾝ	2	[TJSW28] INC.6-10
-	539F7-40611		WHEEL-ASSY,FRONT	ﾌﾛﾝﾄﾎｲｰﾙｱｯｾﾝ	2	[TS W28] INC.6-10
A5	24454-40211		TIRE-ASSY	ﾀｲﾔｱｯｾﾝ	2	[TJ W28] INC.6-8
6	52436-82101		TIRE,28-9-15-12	ﾀｲﾔ	2	[TJ W28]
-	06005-81515		TIRE,28-9-15-12	ﾀｲﾔ	2	[TJSW28]
-	06007-81515		TIRE,28-9-15-12	ﾀｲﾔ	2	[TS W28]
7	52436-82111		TUBE,28-9-15-12T	ﾁｭｰﾌﾞ	2	[TJ W28][TJSW28][TS W28]
8	52436-82121		FLAP,28-9-15-12F	ﾌﾗｯﾌﾟ	2	[TJ W28][TJSW28][TS W28]
A6	54456-80211		RIM-ASSY,700T-15	ﾘﾑｱｯｾﾝ	2	[TJ W28][TJSW28][TS W28] INC.9,10
9	NO PART NO.	#	RIM	ﾘﾑ	2	[TJ W28][TJSW28][TS W28]
10	22439-44031		RING,SIDE	ﾘﾝｸﾞ	2	[TJ W28][TJSW28][TS W28]
11	06731-00120		TUBE,EXTENSION	ﾁｭｰﾌﾞ	2	[TJ W28][TJSW28][TS W28]

FIG.86 REAR WHEEL

(F60344F0) リヤーホイール

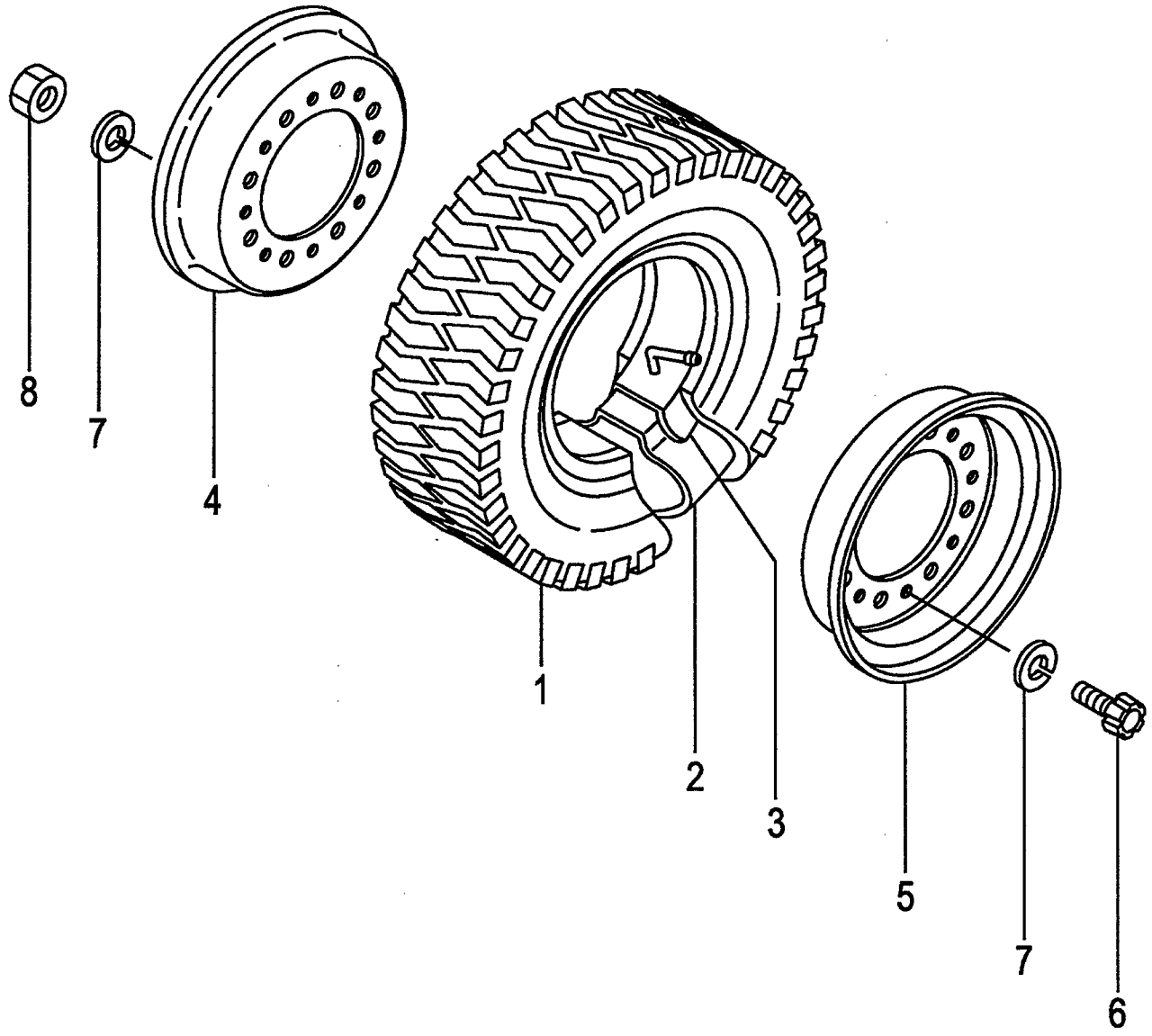

FIG.86
(F60344F0)

A:FD30C7 FD30T7 FD30W7

Item No	Part No.	Mark	Description		Req'd	Remarks : Serial No.
A1	234F4-40302		WHEEL-ASSY,REAR	ﾘｱﾎｲｰﾙｱｯｾﾝ	2	INC.1-8
1	06006-65010		TIRE,650-10-10	ﾀｲﾔ	2	
2	06711-65010		TUBE,650-10-10T	ﾁｭｰﾌﾞ	2	
3	06701-65010		FLAP,650-10-10F	ﾌﾗｯﾌﾟ	2	
A2	52356-80302		RIM-ASSY,500F-10	ﾘﾑｱｯｾﾝ	2	INC.4-8
4	NO PART NO.	#	RIM,INSIDE	ﾘﾑ	2	
5	NO PART NO.	#	RIM,OUTSIDE	ﾘﾑ	2	
6	534F3-82001		BOLT	ﾎﾞﾙﾄ	16	
7	02011-00012		WASHER	ﾜｯｼｬ	32	
8	01400-00012		NUT	ﾅｯﾄ	16	

FIG.87 REAR WHEEL [DR R]

(F60344G0) リヤーホイール

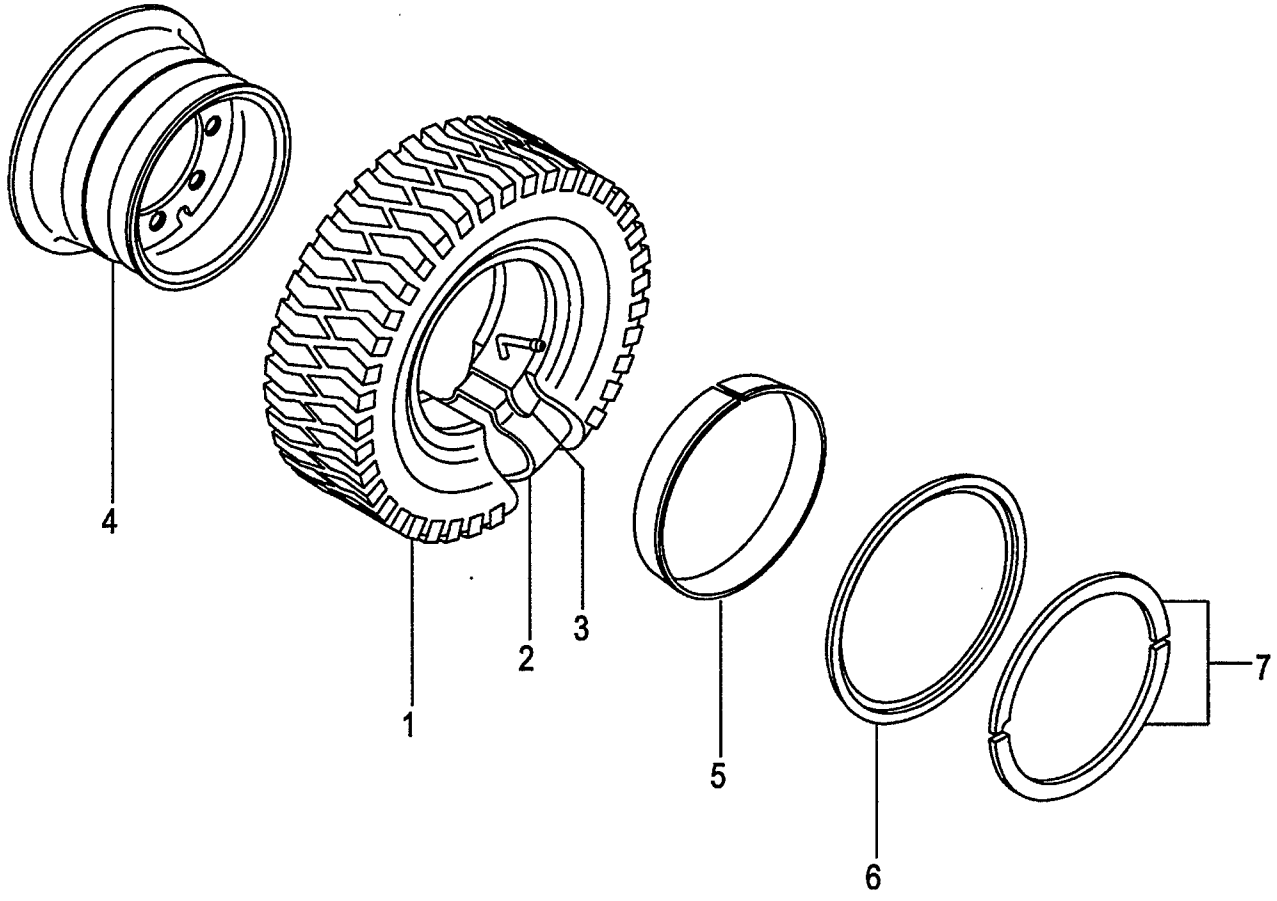

A:FD30C7 FD30T7 FD30W7

Item No	Part No.	Mark	Description		Req'd	Remarks : Serial No.
A1	514J6-82201		WHEEL-ASSY,REAR	ﾘｱﾎｲｰﾙｱｯｾﾝ	2	[DR R] INC.1-7
1	06006-65010		TIRE,650-10-10	ﾀｲﾔ	2	[DR R]
2	06711-65010		TUBE,650-10-10T	ﾁｭｰﾌﾞ	2	[DR R]
3	06701-65010		FLAP,650-10-10F	ﾌﾗｯﾌﾟ	2	[DR R]
A2	514J6-82211		RIM-ASSY,500F-10	ﾘﾑｱｯｾﾝ	2	[DR R] INC.4-7
4	NO PART NO.	#	RIM	ﾘﾑ	2	[DR R]
5	54236-83011		BAND	ﾊﾞﾝﾄﾞ	2	[DR R]
6	54236-83021		FLANGE,SIDE	ﾌﾗﾝｼﾞ	2	[DR R]
7	54236-83031		RING,LOCK	ﾘﾝｸﾞ	2	[DR R]

FIG.88 REAR WHEEL [TJ R][TJSR][TS R]

(F60344H0) リヤーホイール

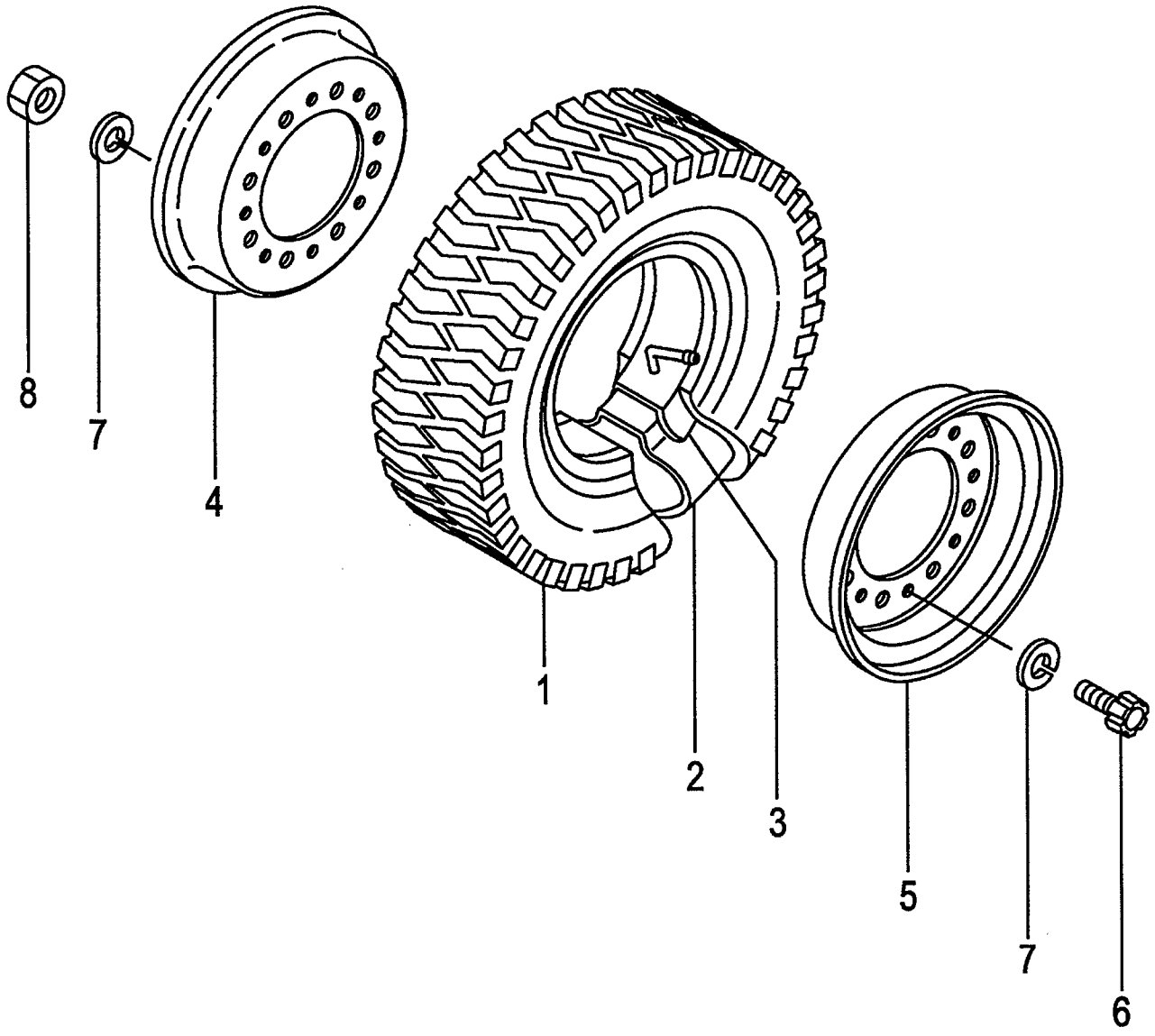

A:FD30C7 FD30T7 FD30W7

Item No	Part No.	Mark	Description		Req'd	Remarks : Serial No.
A1	234F4-40302		WHEEL-ASSY,REAR	リアホイールアッセン	2	[TJ R] INC.1-8
-	539F7-40511		WHEEL-ASSY,REAR	リアホイールアッセン	2	[TJSR] INC.1-8
-	539F7-40711		WHEEL-ASSY,REAR	リアホイールアッセン	2	[TS R] INC.1-8
1	06006-65010		TIRE,650-10-10	タイヤ	2	[TJ R]
-	06005-65010		TIRE,650-10-10	タイヤ	2	[TJSR]
-	06007-65010		TIRE,650-10-10	タイヤ	2	[TS R]
2	06711-65010		TUBE,650-10-10T	チューブ	2	[TJ R][TJSR][TS R]
3	06701-65010		FLAP,650-10-10F	フラップ	2	[TJ R][TJSR][TS R]
A2	52356-80302		RIM-ASSY,500F-10	リムアッセン	2	[TJ R][TJSR][TS R] INC.4-8
4	NO PART NO.	#	RIM,INSIDE	リム	2	[TJ R][TJSR][TS R]
5	NO PART NO.	#	RIM,OUTSIDE	リム	2	[TJ R][TJSR][TS R]
6	534F3-82001		BOLT	ボルト	16	[TJ R][TJSR][TS R]
7	02011-00012		WASHER	ワッシャ	32	[TJ R][TJSR][TS R]
8	01400-00012		NUT	ナット	16	[TJ R][TJSR][TS R]

FIG.89 REAR WHEEL [(TJ R,TJSR,TS R)/DR R]

(F60344J0) リヤーホイール

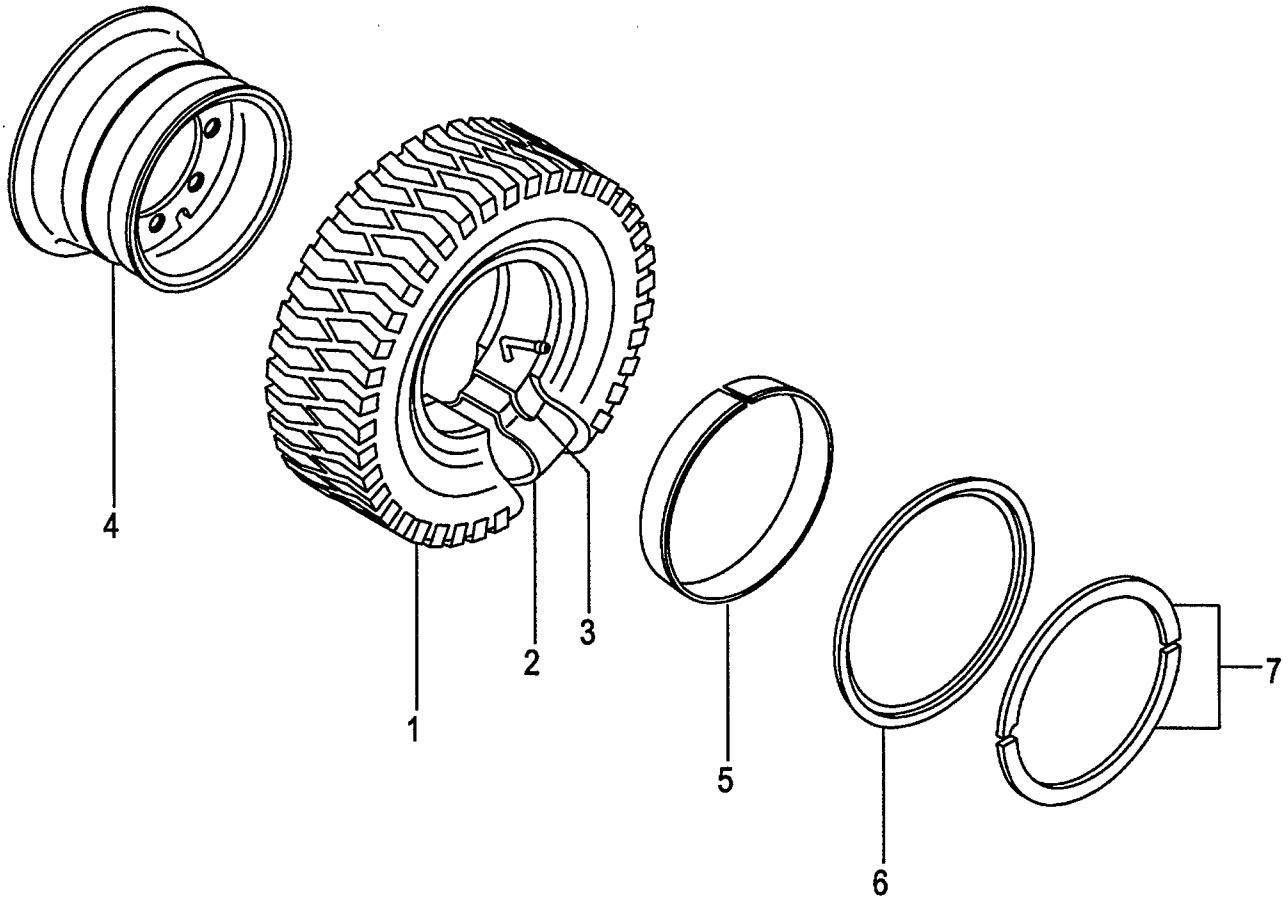

FIG.89
(F60344J0)

A:FD30C7 FD30T7 FD30W7

Item No	Part No.	Mark	Description		Req'd	Remarks : Serial No.
A1	514J6-82201		WHEEL-ASSY,REAR	ﾘｱﾎｲｰﾙｱｯｾﾝ	2	[TJ R/DR R] INC.1-7
-	539F7-40521		WHEEL-ASSY,REAR	ﾘｱﾎｲｰﾙｱｯｾﾝ	2	[TJSR/DR R] INC.1-7
-	539F7-40721		WHEEL-ASSY,REAR	ﾘｱﾎｲｰﾙｱｯｾﾝ	2	[TS R/DR R] INC.1-7
1	06006-65010		TIRE,650-10-10	ﾀｲﾔ	2	[TJ R/DR R]
-	06005-65010		TIRE,650-10-10	ﾀｲﾔ	2	[TJSR/DR R]
-	06007-65010		TIRE,650-10-10	ﾀｲﾔ	2	[TS R/DR R]
2	06711-65010		TUBE,650-10-10T	ﾁｭｰﾌﾞ	2	[TJ R/DR R][TJSR/DR R] [TS R/DR R]
3	06701-65010		FLAP,650-10-10F	ﾌﾗｯﾌﾟ	2	[TJ R/DR R][TJSR/DR R] [TS R/DR R]
A2	514J6-82211		RIM-ASSY,500F-10	ﾘﾑｱｯｾﾝ	2	[TJ R/DR R][TJSR/DR R] [TS R/DR R] INC.4-7
4	NO PART NO.	#	RIM	ﾘﾑ	2	[TJ R/DR R][TJSR/DR R] [TS R/DR R]
5	54236-83011		BAND	ﾊﾞﾝﾄﾞ	2	[TJ R/DR R][TJSR/DR R] [TS R/DR R]
6	54236-83021		FLANGE,SIDE	ﾌﾗﾝｼﾞ	2	[TJ R/DR R][TJSR/DR R] [TS R/DR R]
7	54236-83031		RING,LOCK	ﾘﾝｸﾞ	2	[TJ R/DR R][TJSR/DR R] [TS R/DR R]

FIG.90 REAR WHEEL [TUJR][TUSR][TUWR][TUGR]

(F60344K0) リヤーホイール

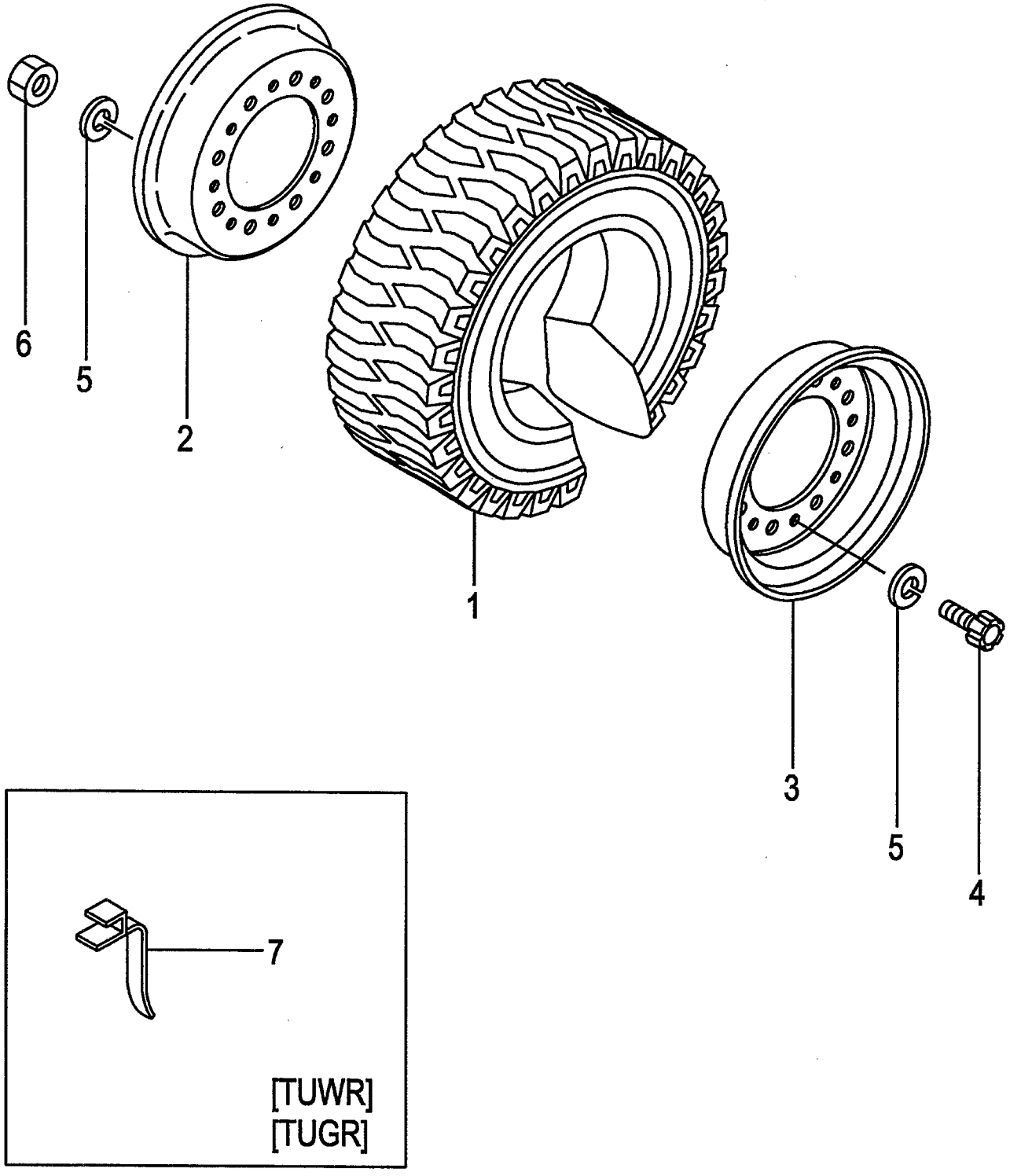

A:FD30C7 FD30T7
B:FD30W7

FIG.90
(F60344K0)

Item No	Part No.	Mark	Description		Req'd	Remarks : Serial No.
A1	52436-80701		WHEEL-ASSY,REAR	ﾘｱﾎｲｰﾙｱｯｾﾝ	2	[TUJR] INC.1-6
-	52436-80701		WHEEL-ASSY,REAR	ﾘｱﾎｲｰﾙｱｯｾﾝ	2	A
						[TUJR/EX] INC.1-6
-	522Q6-80422		WHEEL-ASSY,REAR	ﾘｱﾎｲｰﾙｱｯｾﾝ	2	[TUSR] INC.1-6
-	522Q6-80402		WHEEL-ASSY,REAR	ﾘｱﾎｲｰﾙｱｯｾﾝ	2	[TUWR] INC.1-6
-	522Q6-80412		WHEEL-ASSY,REAR	ﾘｱﾎｲｰﾙｱｯｾﾝ	2	[TUGR] INC.1-6
1	06806-65010		TIRE,UNIQUE,650-10	ﾀｲﾔ	2	[TUJR]
-	06807-65010		TIRE,UNIQUE,650-10	ﾀｲﾔ	2	[TUJR]
-	06807-65010		TIRE,UNIQUE,650-10	ﾀｲﾔ	2	A
						[TUJR/EX]
-	06853-65010		TIRE,SOFTONE,650-10	ﾀｲﾔ	2	[TUSR]
-	06841-65010		TIRE,WHITE,650-10	ﾀｲﾔ	2	[TUWR]
-	06843-65010		TIRE,GREEN,650-10	ﾀｲﾔ	2	[TUGR]
A2	52356-80302		RIM-ASSY,500F-10	ﾘﾑｱｯｾﾝ	2	[TUJR][TUSR][TUWR][TUGR]
						INC.2-6
2	NO PART NO.	#	RIM,INSIDE	ﾘﾑ	2	[TUJR][TUSR][TUWR][TUGR]
3	NO PART NO.	#	RIM,OUTSIDE	ﾘﾑ	2	[TUJR][TUSR][TUWR][TUGR]
4	534F3-82001		BOLT	ﾎﾞﾙﾄ	16	[TUJR][TUSR][TUWR][TUGR]
5	02011-00012		WASHER	ﾜｯｼｬ	32	[TUJR][TUSR][TUWR][TUGR]
6	01400-00012		NUT	ﾅｯﾄ	16	[TUJR][TUSR][TUWR][TUGR]
7	571A6-82081		BELT,EARTH	ﾍﾞﾙﾄ	1	[TUWR][TUGR]

FIG.91 REAR WHEEL [TUJR/DR R]

(F60344L0) リヤーホイール

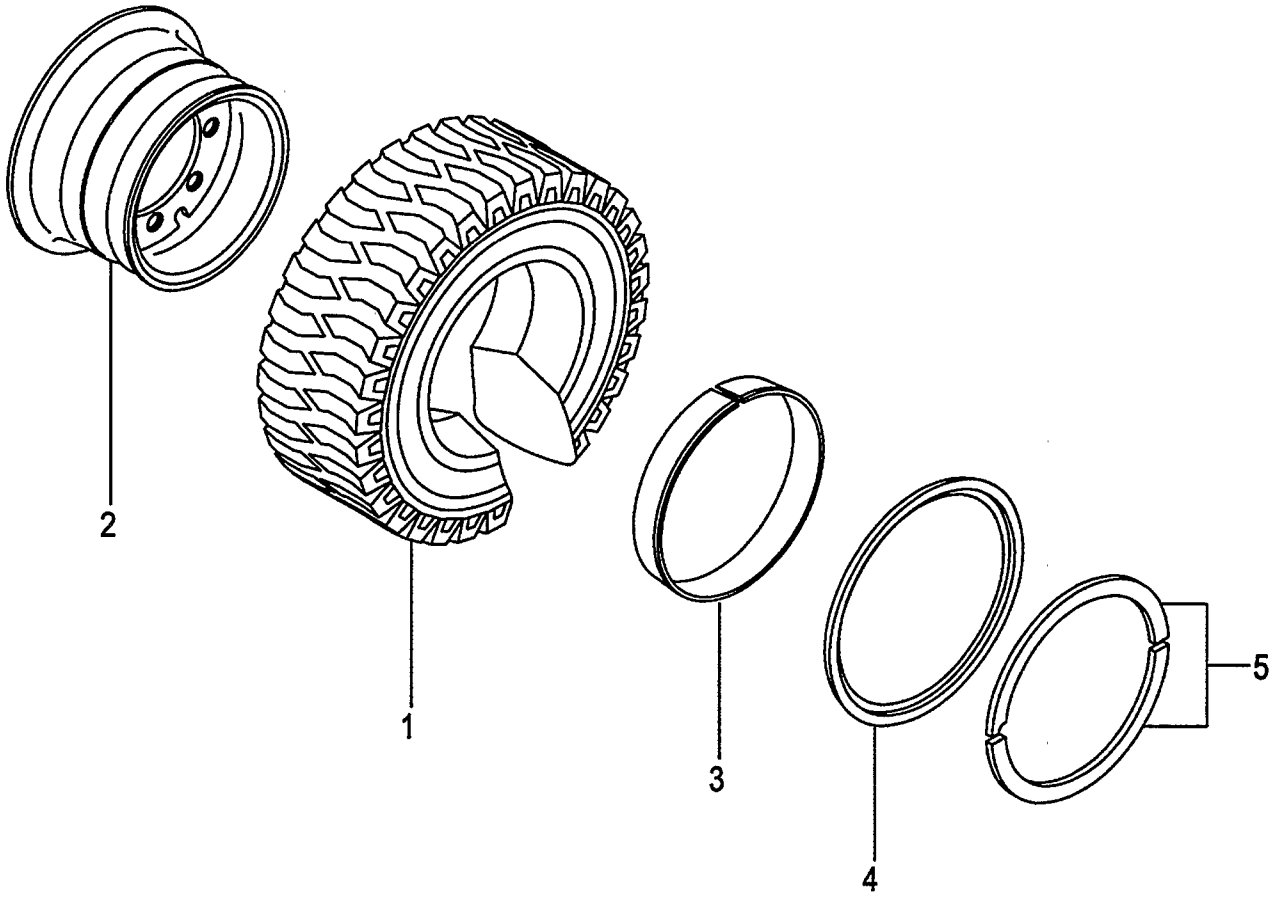

A:FD30C7 FD30T7 FD30W7

Item No	Part No.	Mark	Description		Req'd	Remarks : Serial No.
A1	514J6-82231		WHEEL-ASSY,REAR	ﾘｱﾎｲｰﾙｱｯｾﾝ	2	[TUJR/DR R] INC.1-5
1	06806-65010		TIRE,UNIQUE,650-10	ﾀｲﾔ	2	[TUJR/DR R]
A2	514J6-82211		RIM-ASSY,500F-10	ﾘﾑｱｯｾﾝ	2	[TUJR/DR R] INC.2-5
2	NO PART NO.	#	RIM	ﾘﾑ	2	[TUJR/DR R]
3	54236-83011		BAND	ﾊﾞﾝﾄﾞ	2	[TUJR/DR R]
4	54236-83021		FLANGE,SIDE	ﾌﾗﾝｼﾞ	2	[TUJR/DR R]
5	54236-83031		RING,LOCK	ﾘﾝｸﾞ	2	[TUJR/DR R]

FIG.92 REAR WHEEL [TRAR]

(F60344M0) リヤーホイール

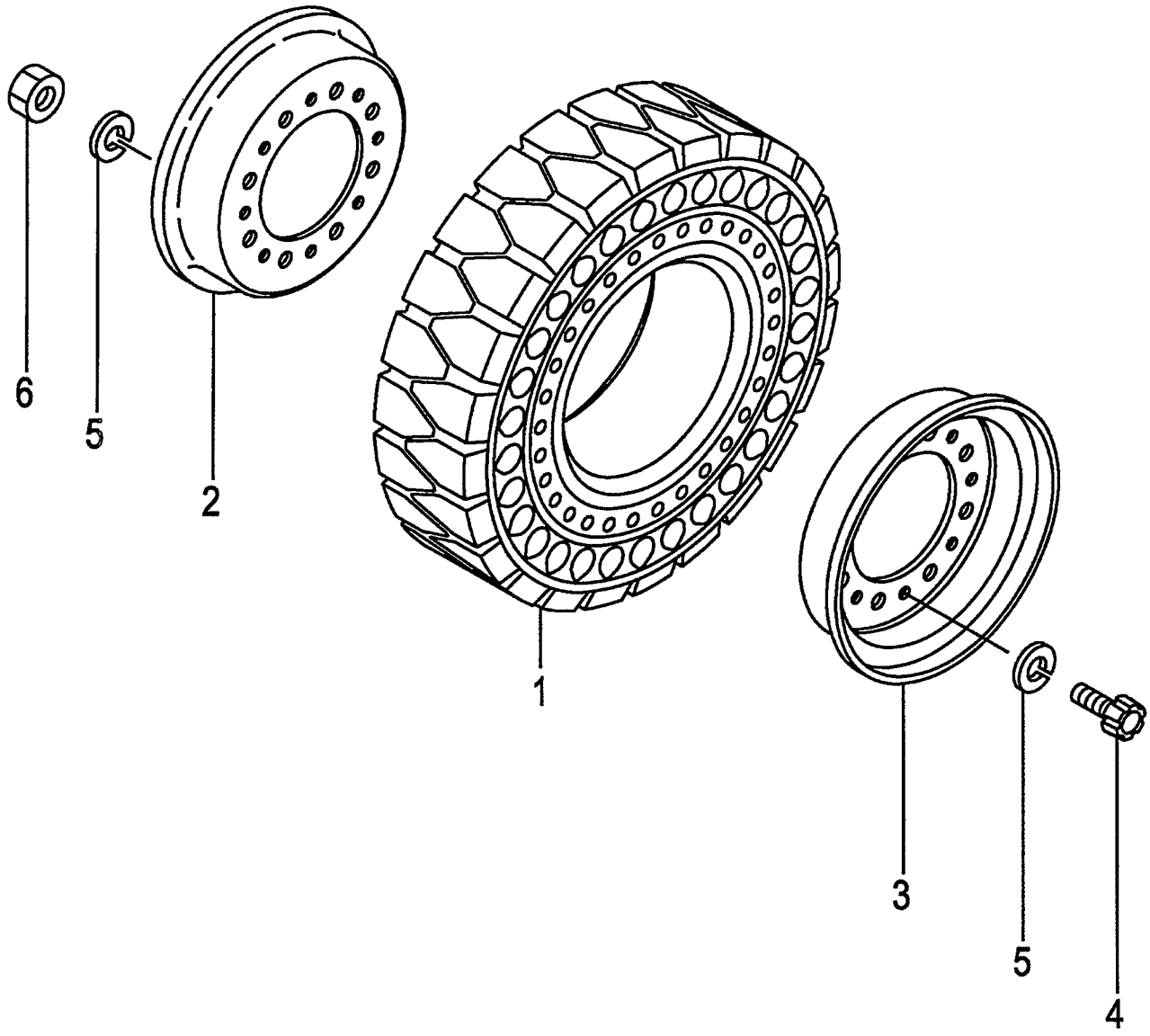

FIG.92
(F60344M0)

A:FD30C7 FD30T7 FD30W7

Item No	Part No.	Mark	Description		Req'd	Remarks : Serial No.
A1	534F6-80271		WHEEL-ASSY,REAR	リアホイールアッセン	2	[TRAR] INC.1-6
1	516G6-85011		TIRE,AIR-BOSS,650-10	タイヤ	2	[TRAR]
A2	52356-80302		RIM-ASSY,500F-10	リムアッセン	2	[TRAR] INC.2-6
2	NO PART NO.	#	RIM,INSIDE	リム	2	[TRAR]
3	NO PART NO.	#	RIM,OUTSIDE	リム	2	[TRAR]
4	534F3-82001		BOLT	ボルト	16	[TRAR]
5	02011-00012		WASHER	ワッシャ	32	[TRAR]
6	01400-00012		NUT	ナット	16	[TRAR]

FIG.93 POWER CYLINDER

(F6034510) ﾊﾟﾜｰｼﾘﾝﾀﾞ

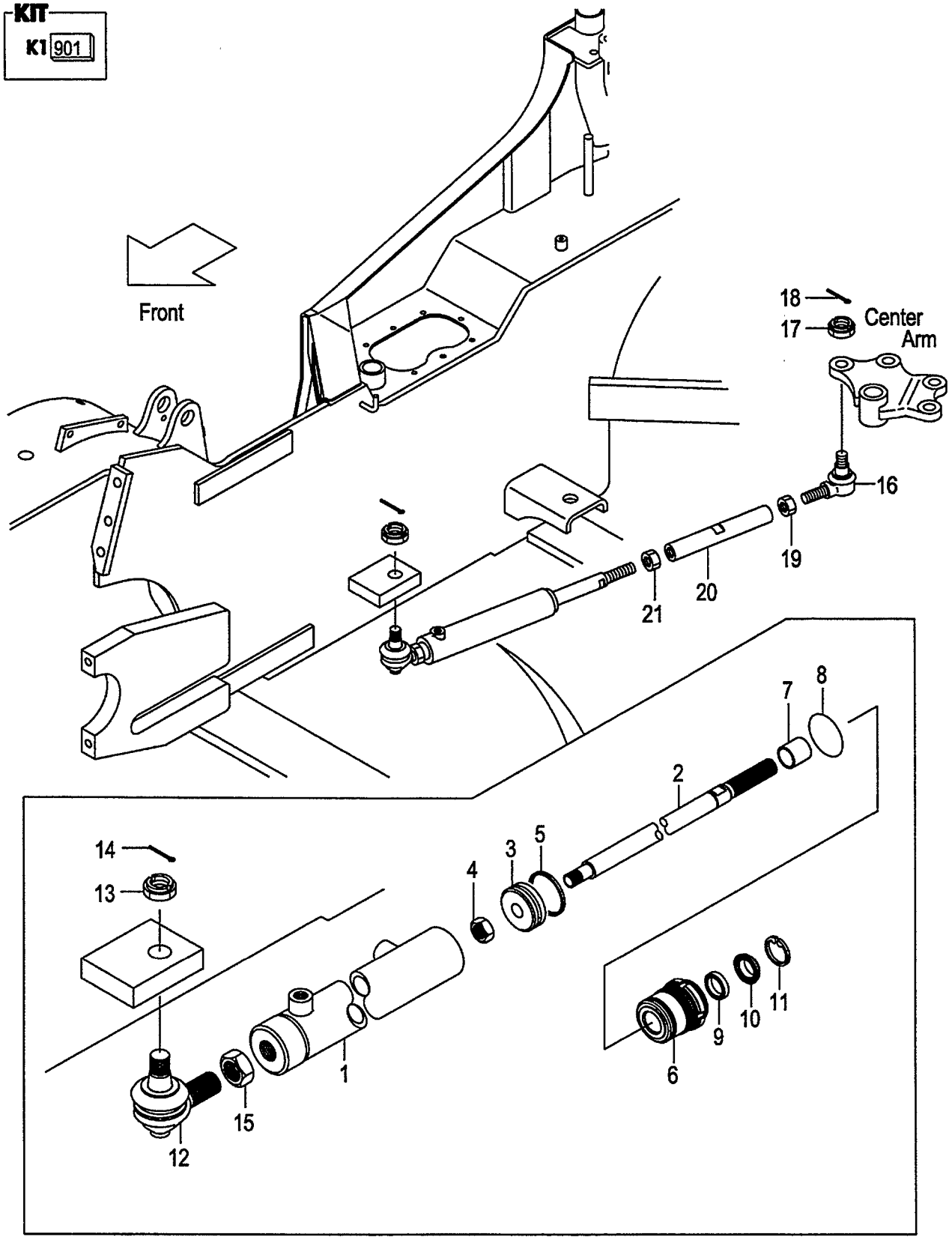

FIG.93
(F6034510)

A:FD30C7 FD30T7 FD30W7

Item No	Part No.	Mark	Description		Req'd	Remarks : Serial No.
A1	239A4-50201		CYL-ASSY,PS	ﾊﾟﾜｽﾃｼﾘﾝﾀﾞｱｯｾﾝ	1	INC.1-15
901	214A4-59802	K1	KIT,REPAIR	ﾘﾍﾟｱｷｯﾄ	1	INC.5,8-11
1	214A4-50111		TUBE,CYL	ﾁｭｰﾌﾞ	1	
2	214A4-52041		ROD,PISTON	ﾛｯﾄﾞ	1	
3	214A4-52031		PISTON	ﾋﾟｽﾄﾝ	1	
4	01402-10018		NUT	ﾅｯﾄ	1	
5	25594-52362	*	SEAL,SLIPPER	ｼｰﾙ	1	
6	214A4-52021		CAP,CYL	ｷｬｯﾌﾟ	1	
7	25954-52061		BUSHING	ﾌﾞｯｼﾝｸﾞ	1	
8	03350-00450	*	O-RING	Oﾘﾝｸﾞ	1	
9	25954-52071	*	PACKING	ﾊﾟｯｷﾝｸﾞ	1	
10	25954-52081	*	SEAL,DUST	ｼｰﾙ	1	
11	25954-52091	*	RING,SNAP	ｽﾅｯﾌﾟﾘﾝｸﾞ	1	
A2	224W4-30341		END-ASSY,ROD,RH	ｴﾝﾄﾞｱｯｾﾝ	1	INC.12-15
12	NO PART NO.	#	END,ROD,RH	ｴﾝﾄﾞ	1	
13	01412-10020		NUT,CASTLE	ﾅｯﾄ	1	
14	02200-04040		PIN,COTTER	ﾋﾟﾝ	1	
15	01402-00024		NUT	ﾅｯﾄ	1	
A3	24234-30561		END-ASSY,ROD,LH	ｴﾝﾄﾞｱｯｾﾝ	1	INC.16-18
16	NO PART NO.	#	END,ROD,LH	ｴﾝﾄﾞ	1	
17	01412-10016		NUT,CASTLE	ﾅｯﾄ	1	
18	02200-32032		PIN,COTTER	ﾋﾟﾝ	1	
19	01407-00022		NUT,LH	ﾅｯﾄ	1	
20	214J4-52001		ROD,CONNECTING	ﾛｯﾄﾞ	1	
21	01402-00024		NUT	ﾅｯﾄ	1	

FIG.94 POWER CYLINDER [EXC][EXE][EXK][EXN][OBT]

(F6034520) ﾊﾟﾜｰｼﾘﾝﾀﾞ

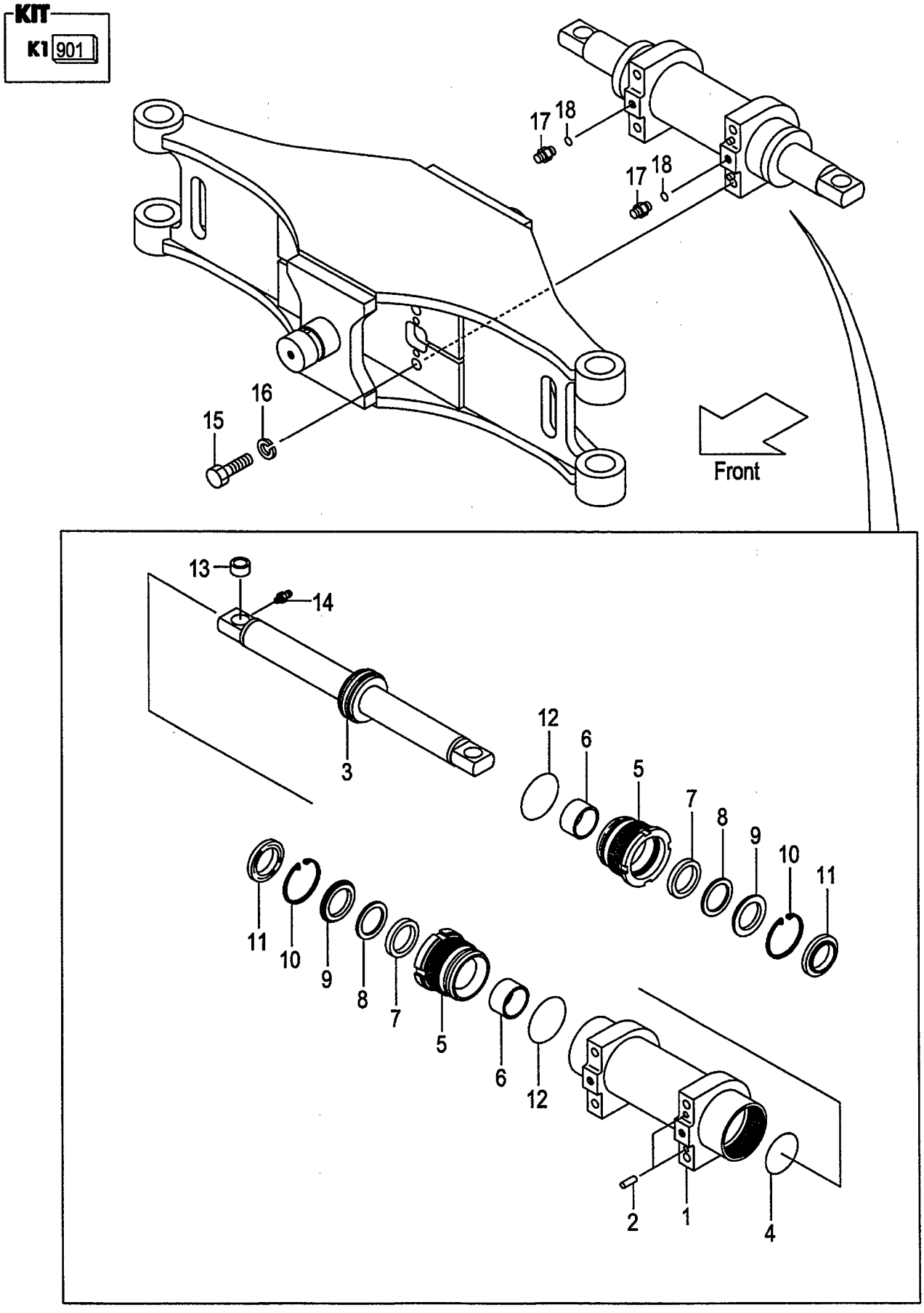

A:FD30C7 FD30T7

Item No	Part No.	Mark	Description		Req'd	Remarks : Serial No.
A1	533A2-40201		CYL-ASSY,PS	ﾊﾟﾜｽﾃｼﾘﾝﾀﾞｱｯｾﾝ	1	[EXC][EXE][EXK][EXN][OBT] [EXB/OBT] INC.1-14
901	514A2-49803	K1	KIT,REPAIR	ﾘﾍﾟｱｷｯﾄ	1	[EXC][EXE][EXK][EXN][OBT] [EXB/OBT] INC.4,7,8,10-12
1	514A2-40462		TUBE,CYL	ﾁｭｰﾌﾞ	1	[EXC][EXE][EXK][EXN][OBT] [EXB/OBT]
2	02212-10020		PIN,PARALLEL	ﾋﾟﾝ	2	[EXC][EXE][EXK][EXN][OBT] [EXB/OBT]
A2	533A2-40211		ROD-ASSY,PISTON	ﾋﾟｽﾄﾝﾛｯﾄﾞｱｯｾﾝ	1	[EXC][EXE][EXK][EXN][OBT] [EXB/OBT] INC.3,4
3	533A2-42001		ROD,PISTON	ﾛｯﾄﾞ	1	[EXC][EXE][EXK][EXN][OBT] [EXB/OBT]
4	25784-52342	*	SEAL	ｼｰﾙ	1	[EXC][EXE][EXK][EXN][OBT] [EXB/OBT]
5	215B4-52122		CAP,CYL	ｷｬｯﾌﾟ	2	[EXC][EXE][EXK][EXN][OBT] [EXB/OBT]
6	59595-55301		BUSHING	ﾌﾞｯｼﾝｸﾞ	2	[EXC][EXE][EXK][EXN][OBT] [EXB/OBT]
7	25958-52201	*	PACKING	ﾊﾟｯｷﾝｸﾞ	2	[EXC][EXE][EXK][EXN][OBT] [EXB/OBT]
8	25958-52211	*	RING,BACK-UP	ﾘﾝｸﾞ	2	[EXC][EXE][EXK][EXN][OBT] [EXB/OBT]
9	25958-52221		RETAINER	ﾘﾃｰﾅ	2	[EXC][EXE][EXK][EXN][OBT] [EXB/OBT]
10	02110-00062	*	RING,SNAP	ｽﾅｯﾌﾟﾘﾝｸﾞ	2	[EXC][EXE][EXK][EXN][OBT] [EXB/OBT]
11	24469-42701	*	SEAL,DUST	ｼｰﾙ	2	[EXC][EXE][EXK][EXN][OBT] [EXB/OBT]
12	214A8-52221	*	O-RING	Oﾘﾝｸﾞ	2	[EXC][EXE][EXK][EXN][OBT] [EXB/OBT]
13	533A2-42021		BUSH	ﾌﾞｯｼﾝｸﾞ	2	[EXC][EXE][EXK][EXN][OBT] [EXB/OBT]
14	214A8-52051		NIPPLE,GREASE	ﾆｯﾌﾟﾙ	2	[EXC][EXE][EXK][EXN][OBT] [EXB/OBT]
15	01100-14035		BOLT	ﾎﾞﾙﾄ	4	[EXC][EXE][EXK][EXN][OBT] [EXB/OBT]
16	02010-00014		WASHER	ﾜｯｼｬ	4	[EXC][EXE][EXK][EXN][OBT] [EXB/OBT]
A3	224W7-62701		NIPPLE-ASSY	ﾆｯﾌﾟﾙｱｯｾﾝ	2	[EXC][EXE][EXK][EXN][OBT] [EXB/OBT] INC.17,18
17	NO PART NO.	#	NIPPLE	ﾆｯﾌﾟﾙ	2	[EXC][EXE][EXK][EXN][OBT] [EXB/OBT]
18	03320-00110		O-RING	Oﾘﾝｸﾞ	2	[EXC][EXE][EXK][EXN][OBT] [EXB/OBT]

FIG.95 POWER CYLINDER [(EXC,EXE,EXK,EXN)/PSS]

(F6034530) ﾊﾟﾜｰｼﾘﾝﾀﾞ

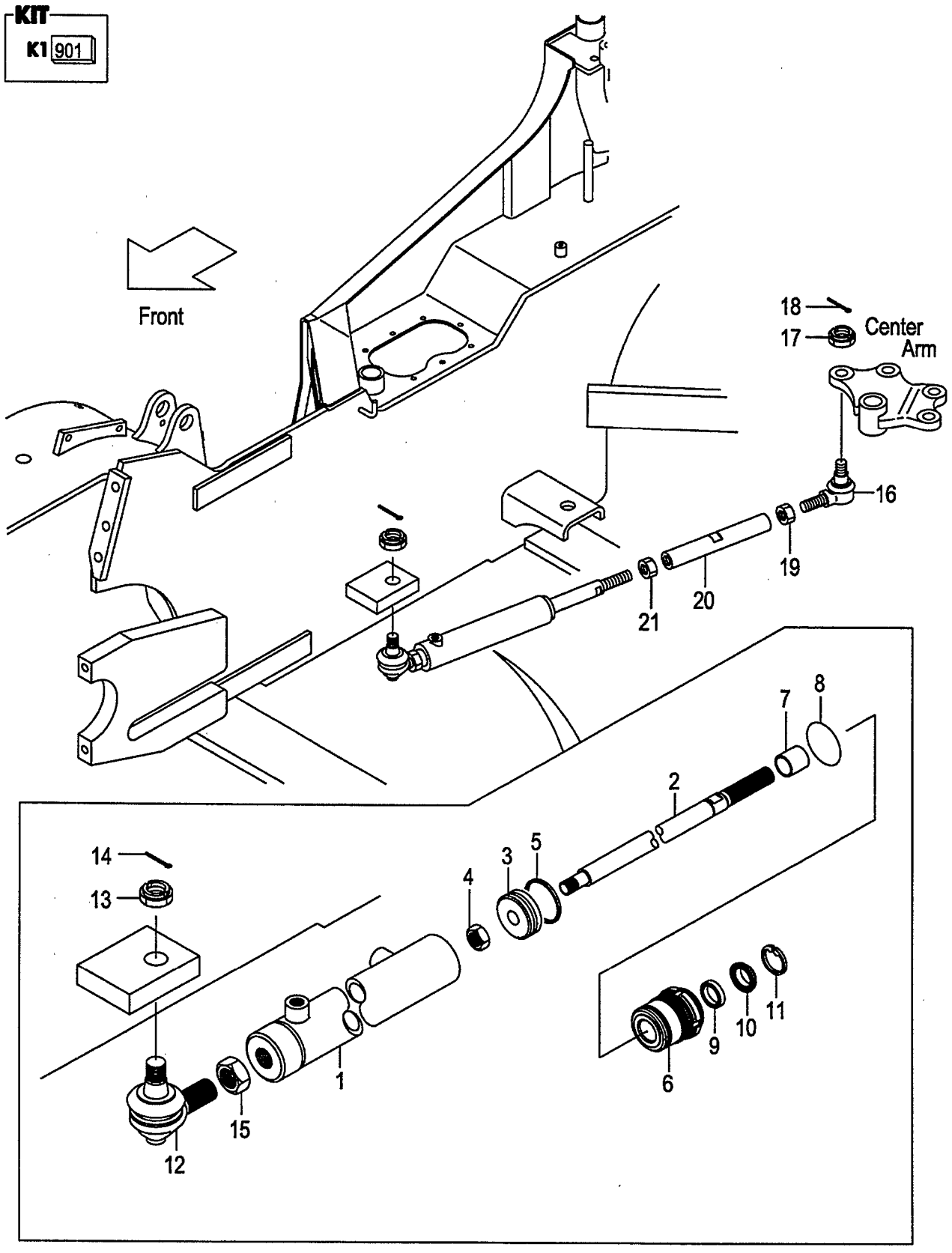

A:FD30C7 FD30T7

Item No	Part No.	Mark	Description		Req'd	Remarks : Serial No.
A1	239A4-50201		CYL-ASSY,PS	ﾊﾟﾜｽﾃｼﾘﾝﾀﾞｱｯｾﾝ	1	[EXC/PSS][EXE/PSS][EXK/PSS] [EXN/PSS] INC.1-15
901	214A4-59802	K1	KIT,REPAIR	ﾘﾍﾟｱｷｯﾄ	1	[EXC/PSS][EXE/PSS][EXK/PSS] [EXN/PSS] INC.5,8-11
1	214A4-50111		TUBE,CYL	ﾁｭｰﾌﾞ	1	[EXC/PSS][EXE/PSS][EXK/PSS] [EXN/PSS]
2	214A4-52041		ROD,PISTON	ﾛｯﾄﾞ	1	[EXC/PSS][EXE/PSS][EXK/PSS] [EXN/PSS]
3	214A4-52031		PISTON	ﾋﾟｽﾄﾝ	1	[EXC/PSS][EXE/PSS][EXK/PSS] [EXN/PSS]
4	01402-10018		NUT	ﾅｯﾄ	1	[EXC/PSS][EXE/PSS][EXK/PSS] [EXN/PSS]
5	25594-52362	*	SEAL,SLIPPER	ｼｰﾙ	1	[EXC/PSS][EXE/PSS][EXK/PSS] [EXN/PSS]
6	214A4-52021		CAP,CYL	ｷｬｯﾌﾟ	1	[EXC/PSS][EXE/PSS][EXK/PSS] [EXN/PSS]
7	25954-52061		BUSHING	ﾌﾞｯｼﾝｸﾞ	1	[EXC/PSS][EXE/PSS][EXK/PSS] [EXN/PSS]
8	03350-00450	*	O-RING	Oﾘﾝｸﾞ	1	[EXC/PSS][EXE/PSS][EXK/PSS] [EXN/PSS]
9	25954-52071	*	PACKING	ﾊﾟｯｷﾝｸﾞ	1	[EXC/PSS][EXE/PSS][EXK/PSS] [EXN/PSS]
10	25954-52081	*	SEAL,DUST	ｼｰﾙ	1	[EXC/PSS][EXE/PSS][EXK/PSS] [EXN/PSS]
11	25954-52091	*	RING,SNAP	ｽﾅｯﾌﾟﾘﾝｸﾞ	1	[EXC/PSS][EXE/PSS][EXK/PSS] [EXN/PSS]
A2	224W4-30341		END-ASSY,ROD,RH	ｴﾝﾄﾞｱｯｾﾝ	1	[EXC/PSS][EXE/PSS][EXK/PSS] [EXN/PSS] INC.12-15
12	NO PART NO.	#	END,ROD,RH	ｴﾝﾄﾞ	1	[EXC/PSS][EXE/PSS][EXK/PSS] [EXN/PSS]
13	01412-10020		NUT,CASTLE	ﾅｯﾄ	1	[EXC/PSS][EXE/PSS][EXK/PSS] [EXN/PSS]
14	02200-04040		PIN,COTTER	ﾋﾟﾝ	1	[EXC/PSS][EXE/PSS][EXK/PSS] [EXN/PSS]
15	01402-00024		NUT	ﾅｯﾄ	1	[EXC/PSS][EXE/PSS][EXK/PSS] [EXN/PSS]
A3	24234-30561		END-ASSY,ROD,LH	ｴﾝﾄﾞｱｯｾﾝ	1	[EXC/PSS][EXE/PSS][EXK/PSS] [EXN/PSS] INC.16-18
16	NO PART NO.	#	END,ROD,LH	ｴﾝﾄﾞ	1	[EXC/PSS][EXE/PSS][EXK/PSS] [EXN/PSS]
17	01412-10016		NUT,CASTLE	ﾅｯﾄ	1	[EXC/PSS][EXE/PSS][EXK/PSS] [EXN/PSS]
18	02200-32032		PIN,COTTER	ﾋﾟﾝ	1	[EXC/PSS][EXE/PSS][EXK/PSS] [EXN/PSS]
19	01407-00022		NUT,LH	ﾅｯﾄ	1	[EXC/PSS][EXE/PSS][EXK/PSS] [EXN/PSS]
20	214J4-52001		ROD,CONNECTING	ﾛｯﾄﾞ	1	[EXC/PSS][EXE/PSS][EXK/PSS] [EXN/PSS]
21	01402-00024		NUT	ﾅｯﾄ	1	[EXC/PSS][EXE/PSS][EXK/PSS] [EXN/PSS]

FIG.96 POWER CYLINDER BOOT [PSB][FC][RINFC]

(F6034540) ﾊﾟﾜｰｼﾘﾝﾀﾞﾌﾞｰﾂ

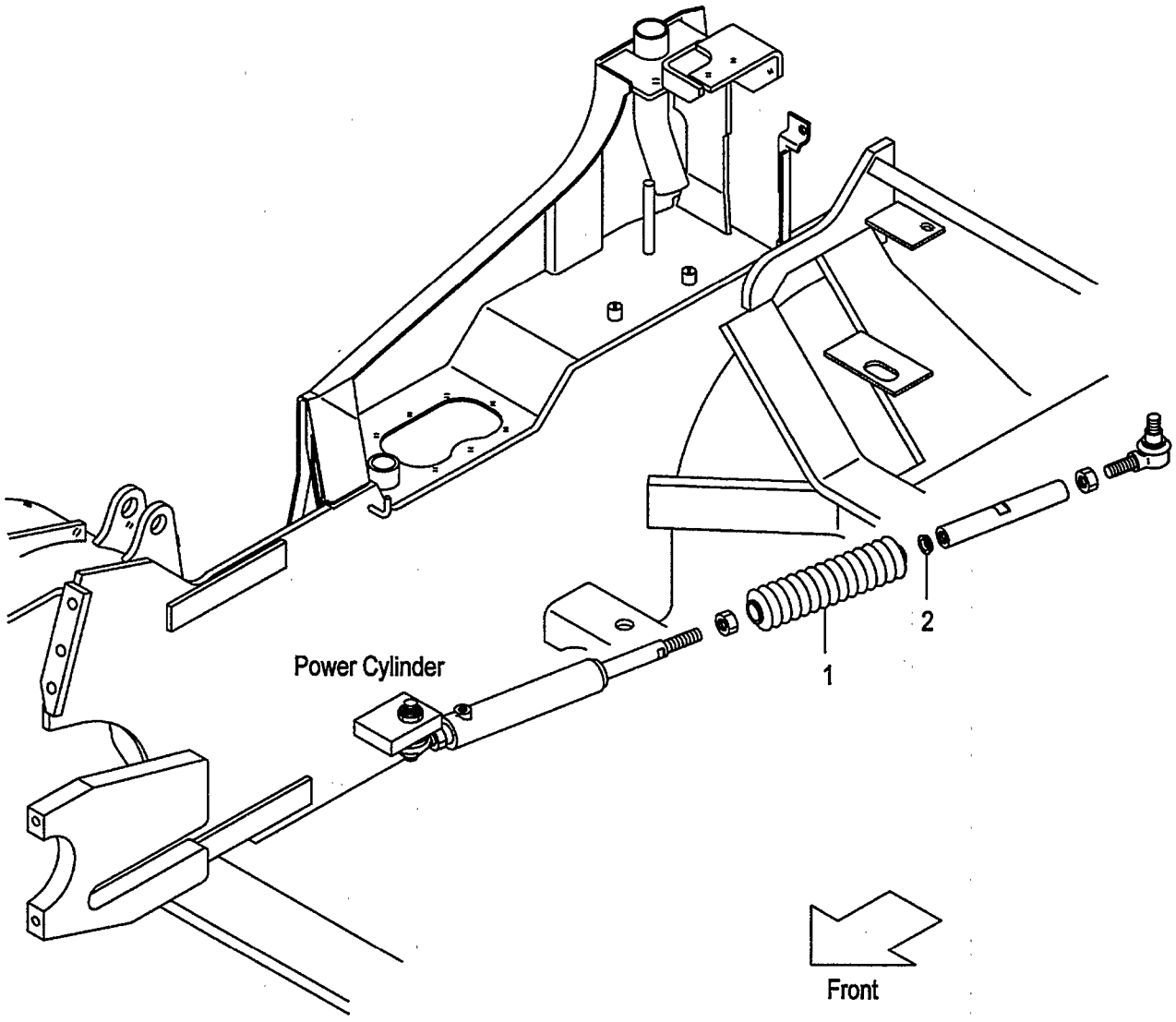

FIG.96
(F6034540)

A:FD30C7 FD30T7 FD30W7

Item No	Part No.	Mark	Description	Req'd	Remarks : Serial No.
1	25594-52431		BOOT,POWER-CYL ﾌﾞｰﾂ	1	[PSB][FC][RINFC]
2	23654-52021		HANGER,BOOT ﾊﾝｶﾞ	1	[PSB][FC][RINFC]

FIG.97 OVERHEAD GUARD

(F6035110) オーバヘッドガード

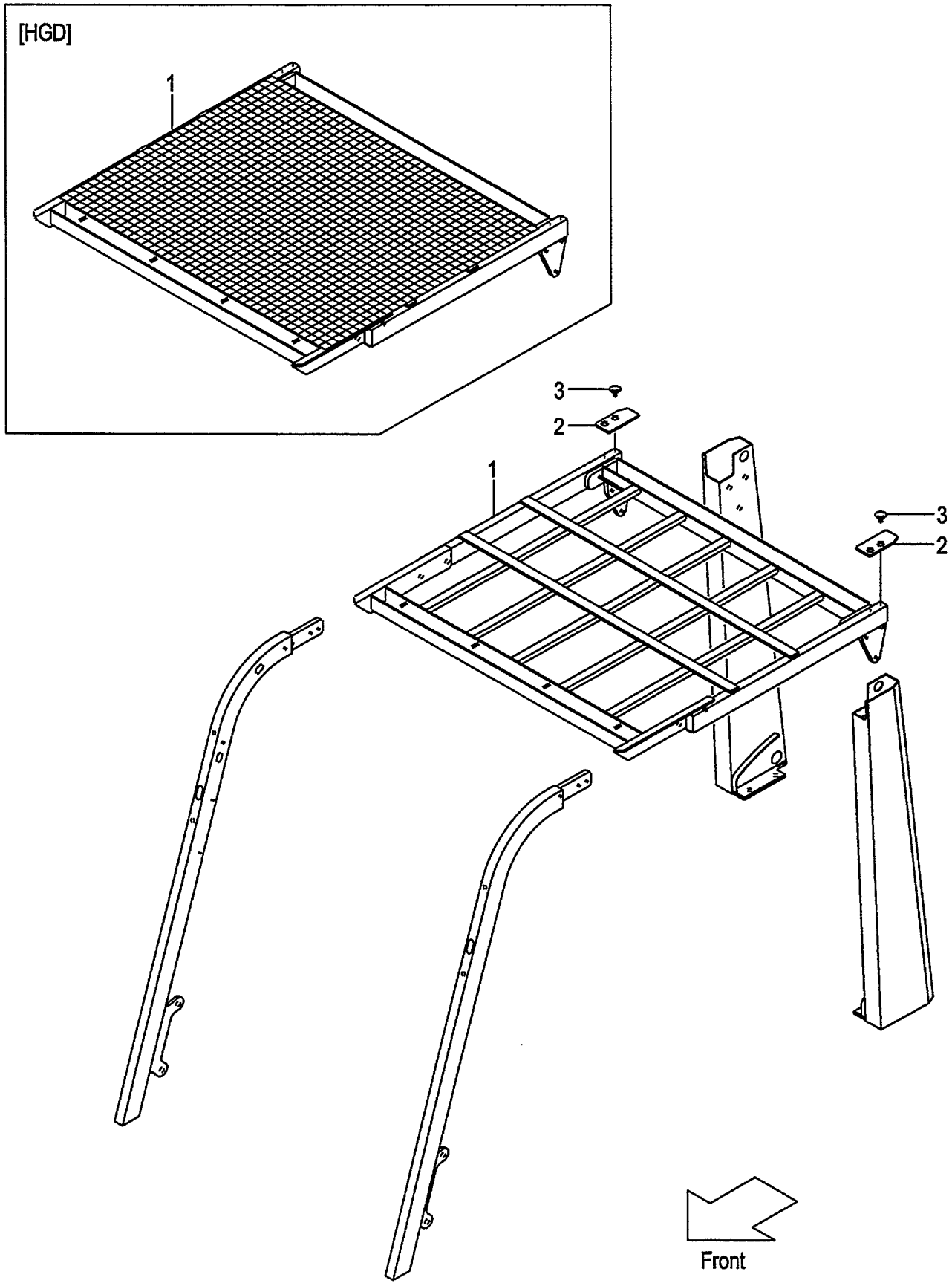

FIG.97
(F6035110)

A:FD30C7 FD30T7 FD30W7

Item No	Part No.	Mark	Description		Req'd	Remarks : Serial No.
1	218M5-10401		GUARD,HEAD	ｶﾞｰﾄﾞ	1	(WITHOUT SCB001,SCBCR)
-	539A2-90201		GUARD,HEAD	ｶﾞｰﾄﾞ	1	[HGD]
-	539A5-00401		GUARD,HEAD	ｶﾞｰﾄﾞ	1	[HGH060]
-	539A5-00701		GUARD,HEAD	ｶﾞｰﾄﾞ	1	[HGH100]
-	539A5-00501		GUARD,HEAD	ｶﾞｰﾄﾞ	1	[HGH150]
-	539A5-00601		GUARD,HEAD	ｶﾞｰﾄﾞ	1	[HGH200]
2	218M5-12501		COVER	ｶﾊﾞｰ	2	(WITHOUT SCB001,SCBCR)
3	216G6-42541		CLIP	ｸﾘｯﾌﾟ	4	(WITHOUT SCB001,SCBCR)

FIG.98 OVERHEAD GUARD [EXB][EXC][EXE][EXK][EXN]

(F6035180) オーバヘッドガード

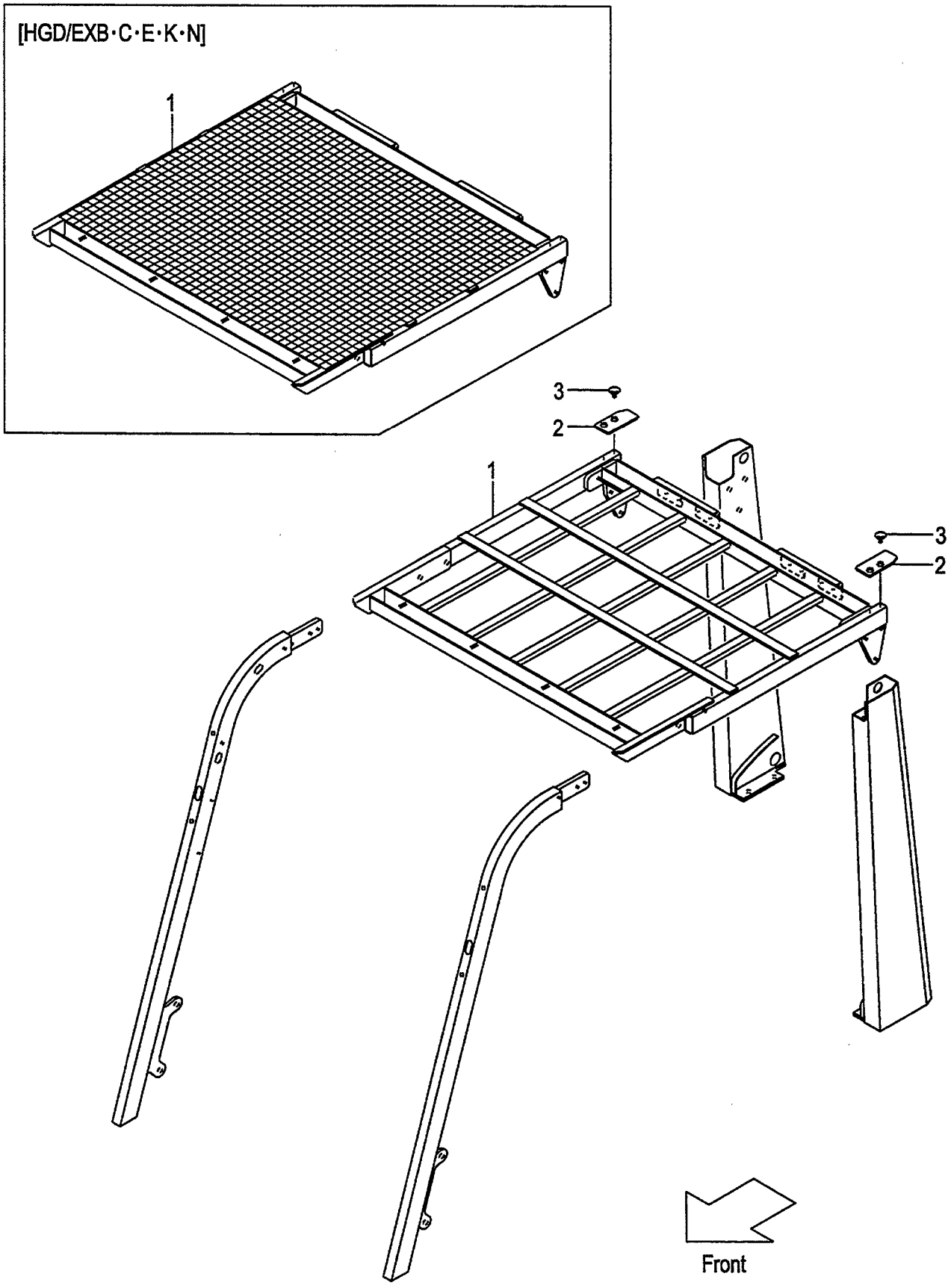

FIG.98
(F6035180)

A:FD30C7 FD30T7

Item No	Part No.	Mark	Description		Req'd	Remarks : Serial No.
1	518G2-80231		GUARD,HEAD	ｶﾞｰﾄﾞ	1	[EXB][EXC][EXE][EXK]
-	539A2-60231		GUARD,HEAD	ｶﾞｰﾄﾞ	1	[EXN]
-	539A2-90301		GUARD,HEAD	ｶﾞｰﾄﾞ	1	[HGD/EXB&C&E&K]
-	539A2-90401		GUARD,HEAD	ｶﾞｰﾄﾞ	1	[HGD/EXN]
-	539A2-80301		GUARD,HEAD	ｶﾞｰﾄﾞ	1	[HGH100/EXB&C&E&N&K]
-	539A2-80501		GUARD,HEAD	ｶﾞｰﾄﾞ	1	[HGH200/EXB&C&E&N&K]
2	218M5-12501		COVER	ｶﾊﾞｰ	2	[EXB][EXC][EXE][EXK][EXN]
3	216G6-42541		CLIP	ｸﾘｯﾌﾟ	4	[EXB][EXC][EXE][EXK][EXN]

FIG.99 FRONT PIPE

(F6035120) フロントパイプ

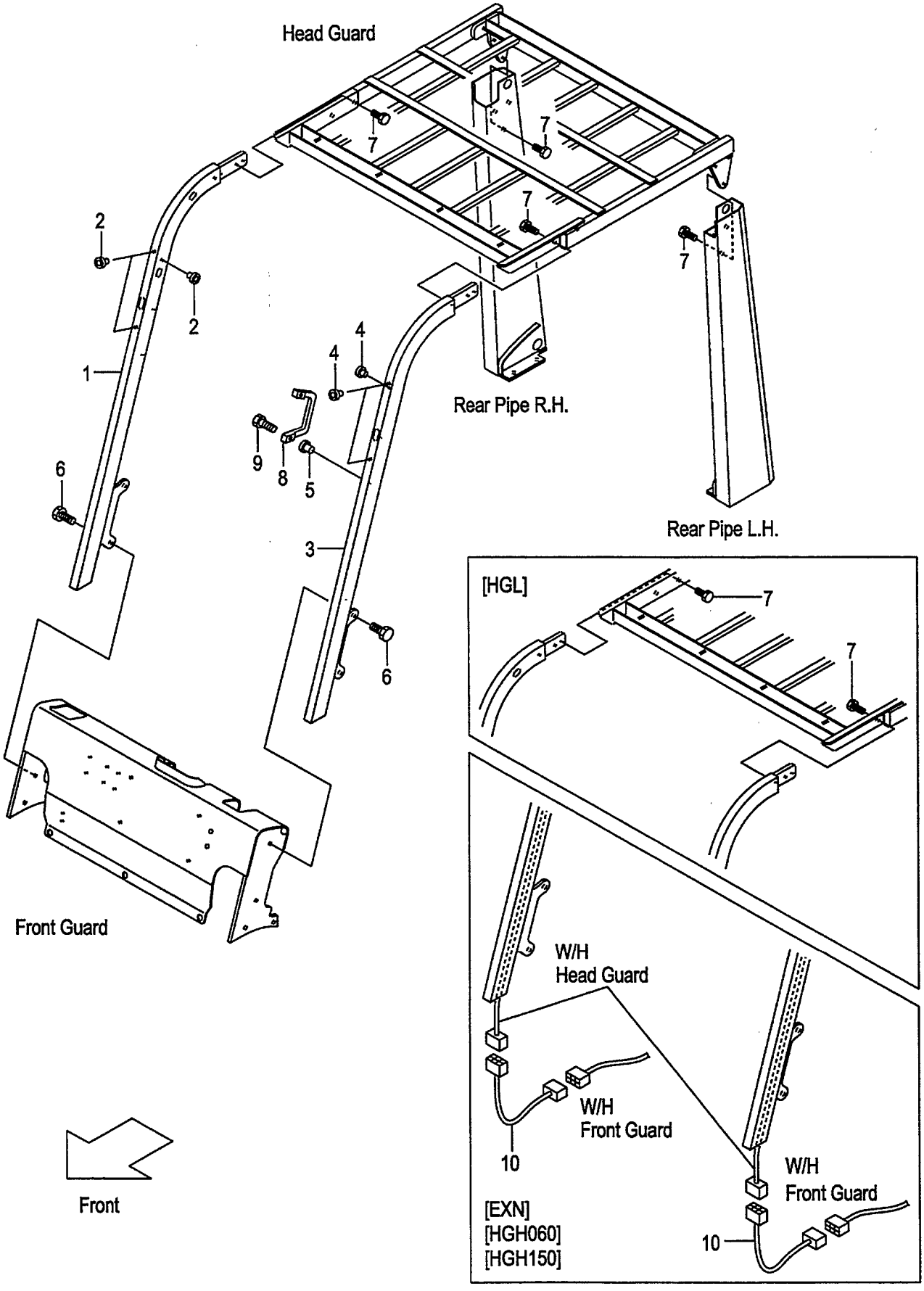

A:FD30C7 FD30T7
B:FD30W7

FIG.99
(F6035120)

Item No	Part No.	Mark	Description		Req'd	Remarks : Serial No.
A1	239A5-10342		PIPE-ASSY,FRONT,RH	ﾌﾛﾝﾄﾊﾟｲﾌﾟｱｯｾﾝ	1	(WITHOUT SCB001,SCBCR) INC.1,2
-	539A5-00152		PIPE-ASSY,FRONT,RH	ﾌﾛﾝﾄﾊﾟｲﾌﾟｱｯｾﾝ	1	A [EXN] INC.1,2
-	236A5-10342		PIPE-ASSY,FRONT,RH	ﾌﾛﾝﾄﾊﾟｲﾌﾟｱｯｾﾝ	1	[HGL] INC.1,2
-	539A5-00152		PIPE-ASSY,FRONT,RH	ﾌﾛﾝﾄﾊﾟｲﾌﾟｱｯｾﾝ	1	[HGH060] INC.1,2
-	539A2-80172		PIPE-ASSY,FRONT,RH	ﾌﾛﾝﾄﾊﾟｲﾌﾟｱｯｾﾝ	1	[HGH100] INC.1,2
-	539A5-00172		PIPE-ASSY,FRONT,RH	ﾌﾛﾝﾄﾊﾟｲﾌﾟｱｯｾﾝ	1	[HGH150] INC.1,2
-	539A2-80192		PIPE-ASSY,FRONT,RH	ﾌﾛﾝﾄﾊﾟｲﾌﾟｱｯｾﾝ	1	[HGH200] INC.1,2
-	236A5-10342		PIPE-ASSY,FRONT,RH	ﾌﾛﾝﾄﾊﾟｲﾌﾟｱｯｾﾝ	1	A [HGL/EXB&C&E&N&K] INC.1,2
-	539A2-80172		PIPE-ASSY,FRONT,RH	ﾌﾛﾝﾄﾊﾟｲﾌﾟｱｯｾﾝ	1	A [HGH100/EXB&C&E&N&K] INC.1,2
-	539A2-80192		PIPE-ASSY,FRONT,RH	ﾌﾛﾝﾄﾊﾟｲﾌﾟｱｯｾﾝ	1	A [HGH200/EXB&C&E&N&K] INC.1,2
1	NO PART NO.	#	PIPE,FRONT,RH	ﾊﾟｲﾌﾟ	1	(WITHOUT SCB001,SCBCR)
-	NO PART NO.	#	PIPE,FRONT,RH	ﾊﾟｲﾌﾟ	1	A [EXN]
-	NO PART NO.	#	PIPE,FRONT,RH	ﾊﾟｲﾌﾟ	1	[HGL]
-	NO PART NO.	#	PIPE,FRONT,RH	ﾊﾟｲﾌﾟ	1	[HGH060]
-	NO PART NO.	#	PIPE,FRONT,RH	ﾊﾟｲﾌﾟ	1	[HGH100]
-	NO PART NO.	#	PIPE,FRONT,RH	ﾊﾟｲﾌﾟ	1	[HGH150]
-	NO PART NO.	#	PIPE,FRONT,RH	ﾊﾟｲﾌﾟ	1	[HGH200]
-	NO PART NO.	#	PIPE,FRONT,RH	ﾊﾟｲﾌﾟ	1	A [HGL/EXB&C&E&N&K]
-	NO PART NO.	#	PIPE,FRONT,RH	ﾊﾟｲﾌﾟ	1	A [HGH100/EXB&C&E&N&K]
-	NO PART NO.	#	PIPE,FRONT,RH	ﾊﾟｲﾌﾟ	1	A [HGH200/EXB&C&E&N&K]
2	514A5-12011		RIVET,POP	ﾘﾍﾞｯﾄ	3	(WITHOUT SCB001,SCBCR)
A2	239A5-10352		PIPE-ASSY,FRONT,LH	ﾌﾛﾝﾄﾊﾟｲﾌﾟｱｯｾﾝ	1	(WITHOUT SCB001,SCBCR) INC.3-5
-	539A5-00162		PIPE-ASSY,FRONT,LH	ﾌﾛﾝﾄﾊﾟｲﾌﾟｱｯｾﾝ	1	A [EXN] INC.3-5
-	236A5-10352		PIPE-ASSY,FRONT,LH	ﾌﾛﾝﾄﾊﾟｲﾌﾟｱｯｾﾝ	1	[HGL] INC.3-5
-	539A5-00162		PIPE-ASSY,FRONT,LH	ﾌﾛﾝﾄﾊﾟｲﾌﾟｱｯｾﾝ	1	[HGH060] INC.3-5
-	539A2-80182		PIPE-ASSY,FRONT,LH	ﾌﾛﾝﾄﾊﾟｲﾌﾟｱｯｾﾝ	1	[HGH100] INC.3-5
-	539A5-00182		PIPE-ASSY,FRONT,LH	ﾌﾛﾝﾄﾊﾟｲﾌﾟｱｯｾﾝ	1	[HGH150] INC.3-5
-	539A2-80202		PIPE-ASSY,FRONT,LH	ﾌﾛﾝﾄﾊﾟｲﾌﾟｱｯｾﾝ	1	[HGH200] INC.3-5
-	236A5-10352		PIPE-ASSY,FRONT,LH	ﾌﾛﾝﾄﾊﾟｲﾌﾟｱｯｾﾝ	1	A [HGL/EXB&C&E&N&K] INC.3-5
-	539A2-80182		PIPE-ASSY,FRONT,LH	ﾌﾛﾝﾄﾊﾟｲﾌﾟｱｯｾﾝ	1	A [HGH100/EXB&C&E&N&K] INC.3-5
-	539A2-80202		PIPE-ASSY,FRONT,LH	ﾌﾛﾝﾄﾊﾟｲﾌﾟｱｯｾﾝ	1	A [HGH200/EXB&C&E&N&K] INC.3-5
3	NO PART NO.	#	PIPE,FRONT,LH	ﾊﾟｲﾌﾟ	1	(WITHOUT SCB001,SCBCR)
-	NO PART NO.	#	PIPE,FRONT,LH	ﾊﾟｲﾌﾟ	1	A [EXN]
-	NO PART NO.	#	PIPE,FRONT,LH	ﾊﾟｲﾌﾟ	1	[HGL]
-	NO PART NO.	#	PIPE,FRONT,LH	ﾊﾟｲﾌﾟ	1	[HGH060]
-	NO PART NO.	#	PIPE,FRONT,LH	ﾊﾟｲﾌﾟ	1	[HGH100]
-	NO PART NO.	#	PIPE,FRONT,LH	ﾊﾟｲﾌﾟ	1	[HGH150]

FIG.99 FRONT PIPE

(F6035120) フロントパイプ

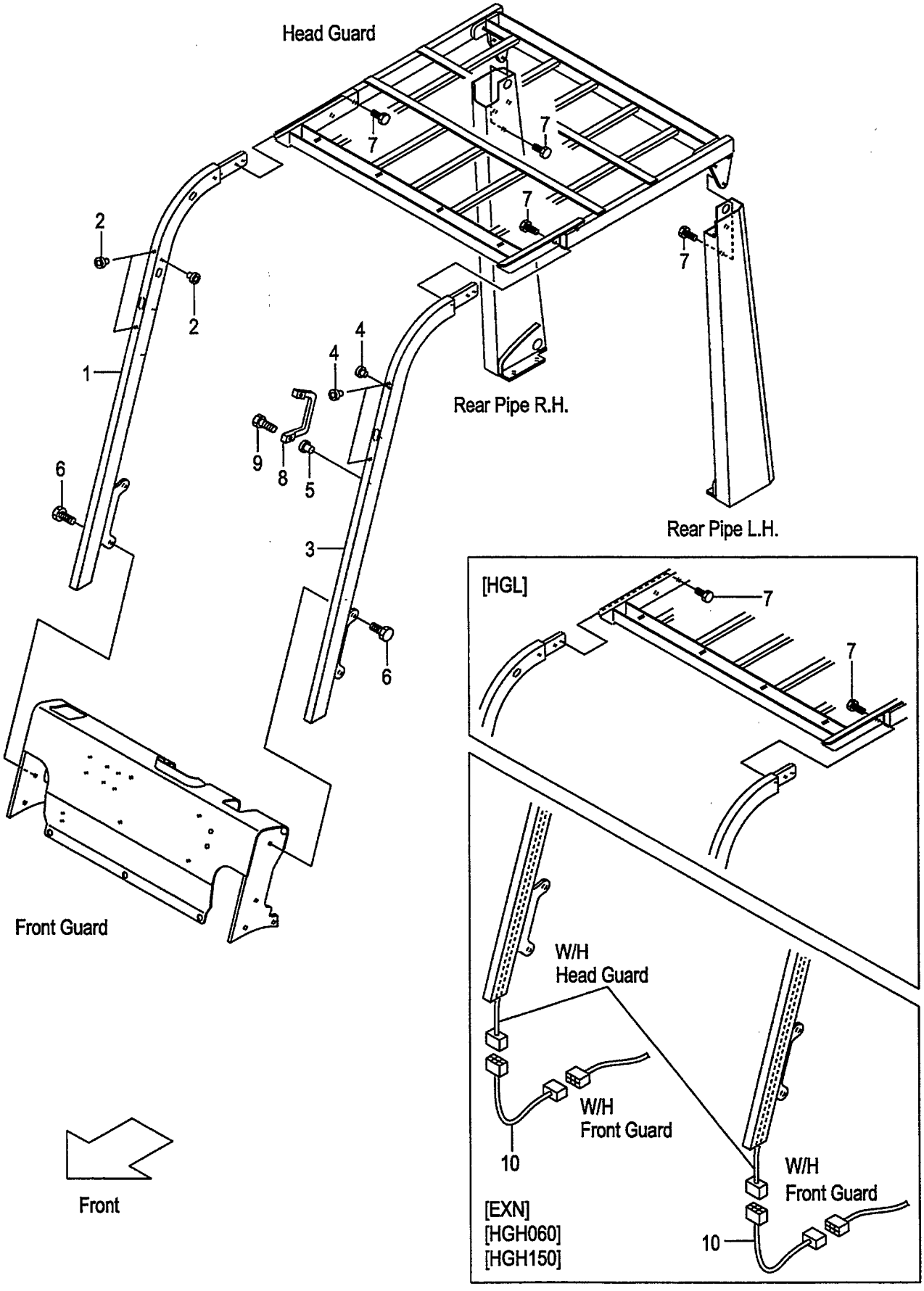

A:FD30C7 FD30T7
B:FD30W7

FIG.99
(F6035120)

Item No	Part No.	Mark	Description		Req'd	Remarks : Serial No.
-	NO PART NO.	#	PIPE,FRONT,LH	ﾊﾟｲﾌﾟ	1	[HGH200]
-	NO PART NO.	#	PIPE,FRONT,LH	ﾊﾟｲﾌﾟ	1	A [HGL/EXB&C&E&N&K]
-	NO PART NO.	#	PIPE,FRONT,LH	ﾊﾟｲﾌﾟ	1	A [HGH100/EXB&C&E&N&K]
-	NO PART NO.	#	PIPE,FRONT,LH	ﾊﾟｲﾌﾟ	1	A [HGH200/EXB&C&E&N&K]
4	514A5-12011		RIVET,POP	ﾘﾍﾞｯﾄ	3	(WITHOUT SCB001,SCBCR)
5	516G5-13151		RIVET,POP	ﾘﾍﾞｯﾄ	2	(WITHOUT SCB001,SCBCR)
6	01186-12025		BOLT	ﾎﾞﾙﾄ	4	(WITHOUT SCB001,SCBCR)
7	01186-12035		BOLT	ﾎﾞﾙﾄ	10	(WITHOUT SCB001,SCBCR)
8	516G5-13051		GRIP	ｸﾞﾘｯﾌﾟ	1	(WITHOUT SCB001,SCBCR)
9	01171-06025		BOLT	ﾎﾞﾙﾄ	2	(WITHOUT SCB001,SCBCR)
10	229F2-42141		WIRE-HARNESS,R-COMB.	ﾜｲﾔﾊｰﾈｽ	2	A [EXN]
-	229F2-42141		WIRE-HARNESS,R-COMB.	ﾜｲﾔﾊｰﾈｽ	2	[HGH060][HGH150]

FIG.100 REAR PIPE

(F6035130) リヤーパイプ

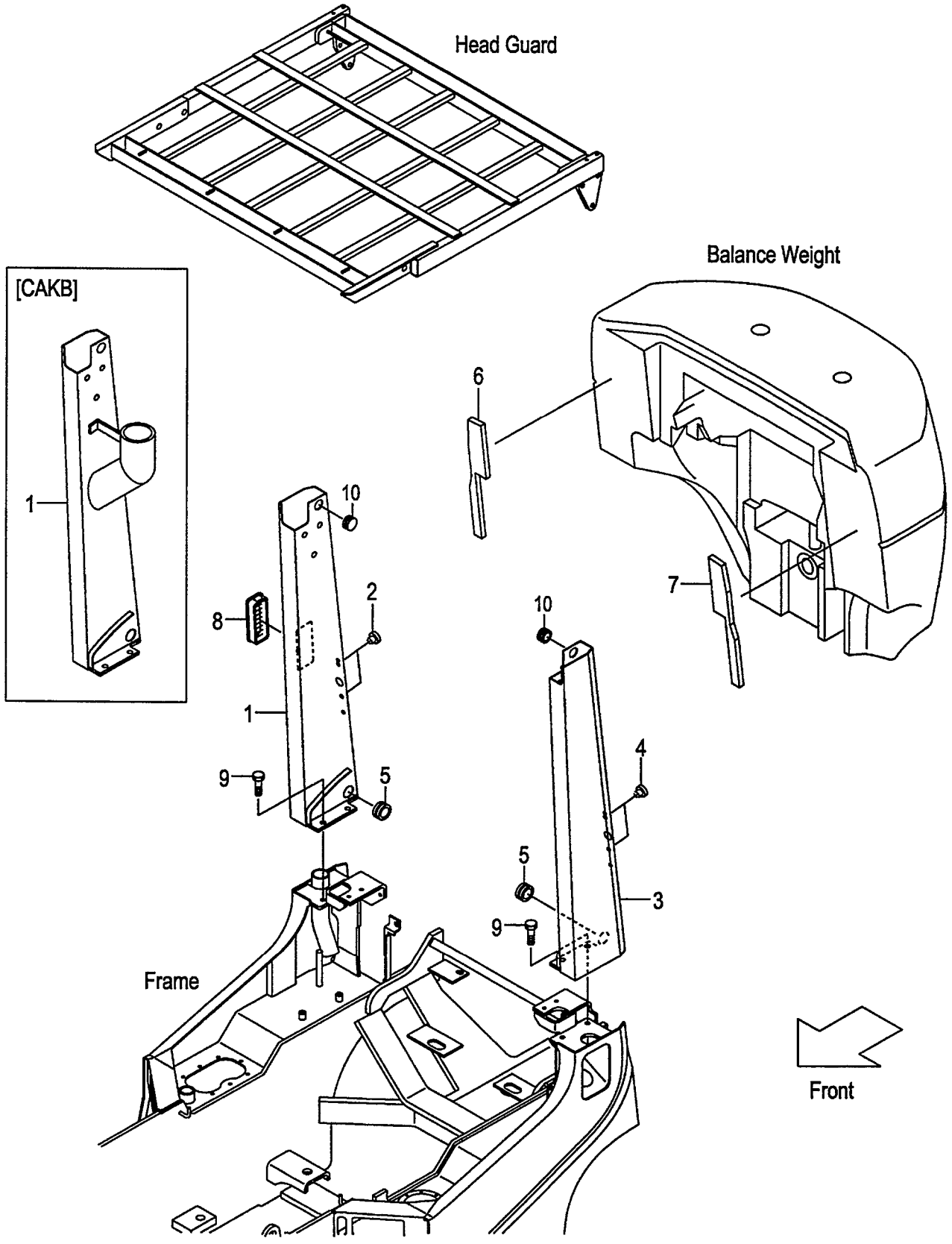

A:FD30C7 FD30T7 FD30W7

Item No	Part No.	Mark	Description		Req'd	Remarks : Serial No.
A1	239A5-10111		PIPE-ASSY,REAR,RH	ﾘﾔｰﾊﾟｲﾌﾟｱｯｾﾝ	1	(WITHOUT SCB001,SCBCR) INC.1,2
-	218G5-10111		PIPE-ASSY,REAR,RH	ﾘﾔｰﾊﾟｲﾌﾟｱｯｾﾝ	1	[HGL] INC.1,2
-	539A5-00111		PIPE-ASSY,REAR,RH	ﾘﾔｰﾊﾟｲﾌﾟｱｯｾﾝ	1	[HGH060] INC.1,2
-	539A5-00351		PIPE-ASSY,REAR,RH	ﾘﾔｰﾊﾟｲﾌﾟｱｯｾﾝ	1	[HGH100] INC.1,2
-	539A5-00131		PIPE-ASSY,REAR,RH	ﾘﾔｰﾊﾟｲﾌﾟｱｯｾﾝ	1	[HGH150] INC.1,2
-	539A5-00371		PIPE-ASSY,REAR,RH	ﾘﾔｰﾊﾟｲﾌﾟｱｯｾﾝ	1	[HGH200] INC.1,2
-	539A0-90111		PIPE-ASSY,REAR,RH	ﾘﾔｰﾊﾟｲﾌﾟｱｯｾﾝ	1	[CAKB] INC.1,2 (WITHOUT CAKB/SCB001, CAKB/SCBCR)
-	518G0-90111		PIPE-ASSY,REAR,RH	ﾘﾔｰﾊﾟｲﾌﾟｱｯｾﾝ	1	[CAKB/HGL] INC.1,2
1	NO PART NO.	#	PIPE,REAR,RH	ﾊﾟｲﾌﾟ	1	(WITHOUT SCB001,SCBCR)
-	NO PART NO.	#	PIPE,REAR,RH	ﾊﾟｲﾌﾟ	1	[HGL]
-	NO PART NO.	#	PIPE,REAR,RH	ﾊﾟｲﾌﾟ	1	[HGH060]
-	NO PART NO.	#	PIPE,REAR,RH	ﾊﾟｲﾌﾟ	1	[HGH100]
-	NO PART NO.	#	PIPE,REAR,RH	ﾊﾟｲﾌﾟ	1	[HGH150]
-	NO PART NO.	#	PIPE,REAR,RH	ﾊﾟｲﾌﾟ	1	[HGH200]
-	NO PART NO.	#	PIPE,REAR,RH	ﾊﾟｲﾌﾟ	1	[CAKB] (WITHOUT CAKB/SCB001, CAKB/SCBCR)
-	NO PART NO.	#	PIPE,REAR,RH	ﾊﾟｲﾌﾟ	1	[CAKB/HGL]
2	514A5-12011		RIVET,POP	ﾘﾍﾞｯﾄ	2	(WITHOUT SCB001,SCBCR)
A2	239A5-10121		PIPE-ASSY,REAR,LH	ﾘﾔｰﾊﾟｲﾌﾟｱｯｾﾝ	1	(WITHOUT SCB001,SCBCR) INC.3,4
-	218G5-10121		PIPE-ASSY,REAR,LH	ﾘﾔｰﾊﾟｲﾌﾟｱｯｾﾝ	1	[HGL] INC.3,4
-	539A5-00121		PIPE-ASSY,REAR,LH	ﾘﾔｰﾊﾟｲﾌﾟｱｯｾﾝ	1	[HGH060] INC.3,4
-	539A5-00361		PIPE-ASSY,REAR,LH	ﾘﾔｰﾊﾟｲﾌﾟｱｯｾﾝ	1	[HGH100] INC.3,4
-	539A5-00141		PIPE-ASSY,REAR,LH	ﾘﾔｰﾊﾟｲﾌﾟｱｯｾﾝ	1	[HGH150] INC.3,4
-	539A5-00381		PIPE-ASSY,REAR,LH	ﾘﾔｰﾊﾟｲﾌﾟｱｯｾﾝ	1	[HGH200] INC.3,4
-	218G5-10121		PIPE-ASSY,REAR,LH	ﾘﾔｰﾊﾟｲﾌﾟｱｯｾﾝ	1	[CAKB/HGL] INC.3,4
3	NO PART NO.	#	PIPE,REAR,LH	ﾊﾟｲﾌﾟ	1	(WITHOUT SCB001,SCBCR)
-	NO PART NO.	#	PIPE,REAR,LH	ﾊﾟｲﾌﾟ	1	[HGL]
-	NO PART NO.	#	PIPE,REAR,LH	ﾊﾟｲﾌﾟ	1	[HGH060]
-	NO PART NO.	#	PIPE,REAR,LH	ﾊﾟｲﾌﾟ	1	[HGH100]
-	NO PART NO.	#	PIPE,REAR,LH	ﾊﾟｲﾌﾟ	1	[HGH150]
-	NO PART NO.	#	PIPE,REAR,LH	ﾊﾟｲﾌﾟ	1	[HGH200]
-	NO PART NO.	#	PIPE,REAR,LH	ﾊﾟｲﾌﾟ	1	[CAKB/HGL]
4	514A5-12011		RIVET,POP	ﾘﾍﾞｯﾄ	2	(WITHOUT SCB001,SCBCR)
5	524W5-12091		GROMMET	ｸﾞﾛﾒｯﾄ	2	(WITHOUT SCB001,SCBCR)
6	239A5-12401		RUBBER,WEIGHT,RH	ﾗﾊﾞｰ	1	(WITHOUT SCB001,SCBCR)
7	239A5-12411		RUBBER,WEIGHT,LH	ﾗﾊﾞｰ	1	(WITHOUT SCB001,SCBCR)
8	230C1-02041		COVER,AIR-INTAKE	ｶﾊﾞｰ	1	(WITHOUT CAKB,SCB001,SCBCR)
9	01186-12025		BOLT	ﾎﾞﾙﾄ	4	(WITHOUT SCB001,SCBCR)
10	27662-62721		GROMMET	ｸﾞﾛﾒｯﾄ	2	(WITHOUT SCB001,SCBCR)

FIG.101 REAR PIPE [EXB][EXC][EXE][EXK][EXN]

(F6035140) リヤーパイプ

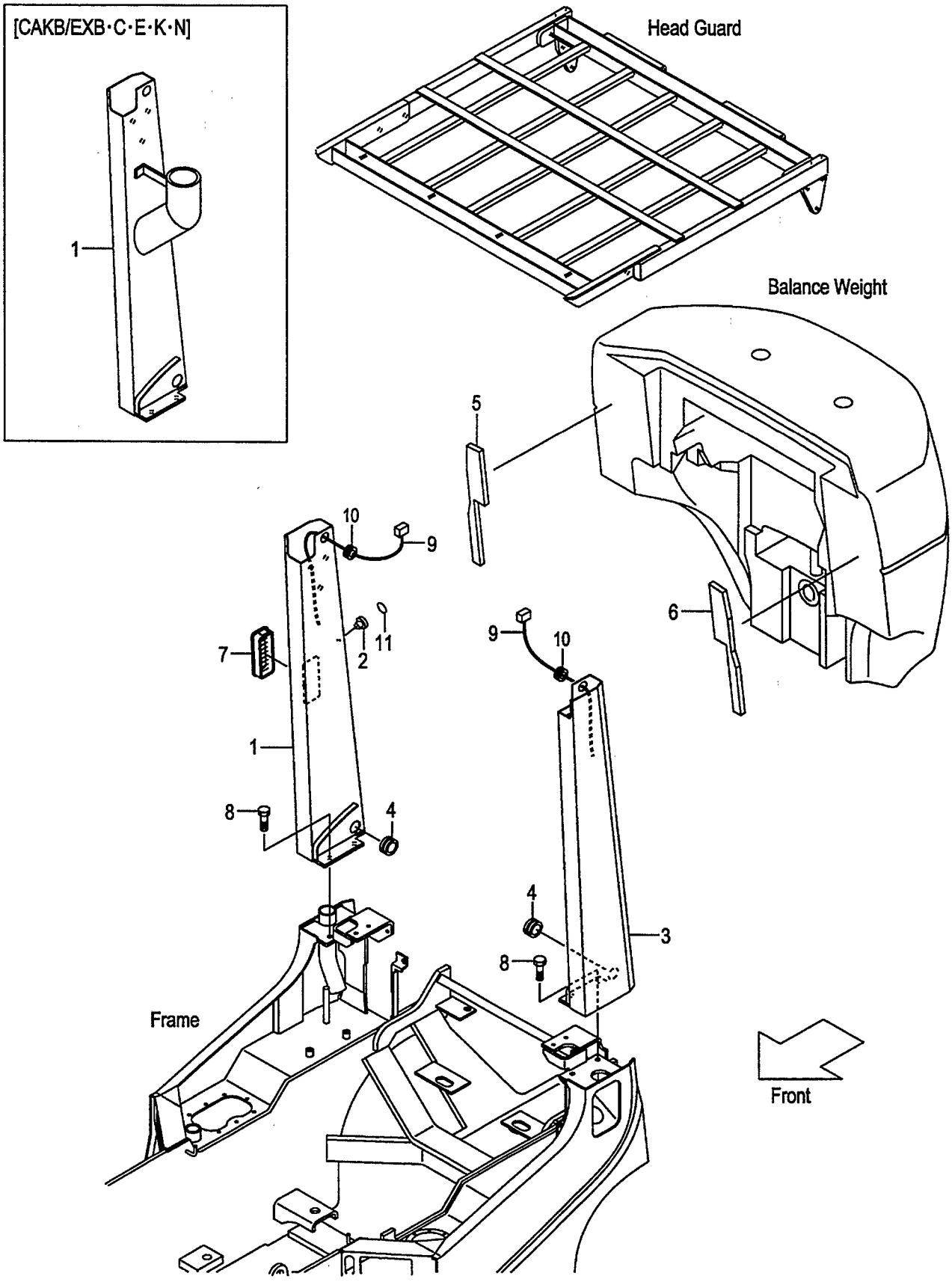

A:FD30C7 FD30T7

Item No	Part No.	Mark	Description		Req'd	Remarks : Serial No.
A1	539A2-80111		PIPE-ASSY,REAR,RH	ﾘﾔｰﾊﾟｲﾌﾟｱｯｾﾝ	1	[EXB][EXC][EXE][EXK] INC.1,2
-	539A2-60111		PIPE-ASSY,REAR,RH	ﾘﾔｰﾊﾟｲﾌﾟｱｯｾﾝ	1	[EXN] INC.1,2
-	518G2-80101		PIPE-ASSY,REAR,RH	ﾘﾔｰﾊﾟｲﾌﾟｱｯｾﾝ	1	[HGL/EXB&C&E&K&N] INC.1,2
-	539A2-80151		PIPE-ASSY,REAR,RH	ﾘﾔｰﾊﾟｲﾌﾟｱｯｾﾝ	1	[HGH100/EXB&C&E&K&N] INC.1,2
-	539A2-80161		PIPE-ASSY,REAR,RH	ﾘﾔｰﾊﾟｲﾌﾟｱｯｾﾝ	1	[HGH200/EXB&C&E&K&N] INC.1,2
-	539C0-90051		PIPE-ASSY,REAR,RH	ﾘﾔｰﾊﾟｲﾌﾟｱｯｾﾝ	1	[CAKB/EXB&C&E&K] INC.1,2
-	539C0-90061		PIPE-ASSY,REAR,RH	ﾘﾔｰﾊﾟｲﾌﾟｱｯｾﾝ	1	[CAKB/EXN] INC.1,2
-	518G0-90211		PIPE-ASSY,REAR,RH	ﾘﾔｰﾊﾟｲﾌﾟｱｯｾﾝ	1	[CAKB/HGL/EXB&C&E&K&N] INC.1,2
1	NO PART NO.	#	PIPE,REAR,RH	ﾊﾟｲﾌﾟ	1	[EXB][EXC][EXE][EXK]
-	NO PART NO.	#	PIPE,REAR,RH	ﾊﾟｲﾌﾟ	1	[EXN]
-	NO PART NO.	#	PIPE,REAR,RH	ﾊﾟｲﾌﾟ	1	[HGL/EXB&C&E&K&N]
-	NO PART NO.	#	PIPE,REAR,RH	ﾊﾟｲﾌﾟ	1	[HGH100/EXB&C&E&K&N]
-	NO PART NO.	#	PIPE,REAR,RH	ﾊﾟｲﾌﾟ	1	[HGH200/EXB&C&E&K&N]
-	NO PART NO.	#	PIPE,REAR,RH	ﾊﾟｲﾌﾟ	1	[CAKB/EXB&C&E&K]
-	NO PART NO.	#	PIPE,REAR,RH	ﾊﾟｲﾌﾟ	1	[CAKB/EXN]
-	NO PART NO.	#	PIPE,REAR,RH	ﾊﾟｲﾌﾟ	1	[CAKB/HGL/EXB&C&E&K&N]
2	514A5-12011		RIVET,POP	ﾘﾍﾞｯﾄ	1	[EXB][EXC][EXE][EXK][EXN]
3	539A2-80221		PIPE,REAR,LH	ﾊﾟｲﾌﾟ	1	[EXB][EXC][EXE][EXK]
-	539A2-60221		PIPE,REAR,LH	ﾊﾟｲﾌﾟ	1	[EXN]
-	518G2-80121		PIPE,REAR,LH	ﾊﾟｲﾌﾟ	1	[HGL/EXB&C&E&K&N]
-	539A2-80371		PIPE,REAR,LH	ﾊﾟｲﾌﾟ	1	[HGH100/EXB&C&E&K&N]
-	539A2-80571		PIPE,REAR,LH	ﾊﾟｲﾌﾟ	1	[HGH200/EXB&C&E&K&N]
-	518G2-80121		PIPE,REAR,LH	ﾊﾟｲﾌﾟ	1	[CAKB/HGL/EXB&C&E&K&N]
4	524W5-12091		GROMMET	ｸﾞﾛﾒｯﾄ	2	[EXB][EXC][EXE][EXK][EXN]
5	239A5-12401		RUBBER,WEIGHT,RH	ﾗﾊﾞｰ	1	[EXB][EXC][EXE][EXK][EXN]
6	239A5-12411		RUBBER,WEIGHT,LH	ﾗﾊﾞｰ	1	[EXB][EXC][EXE][EXK][EXN]
7	230C1-02041		COVER,AIR-INTAKE	ｶﾊﾞｰ	1	[EXB][EXC][EXE][EXK][EXN] (WITHOUT CAKB/EX)
8	01186-12025		BOLT	ﾎﾞﾙﾄ	4	[EXB][EXC][EXE][EXK][EXN]
9	514T2-72061		WIRE-HARNESS,R-COMB.	ﾜｲﾔﾊｰﾈｽ	2	[EXB][EXC][EXE][EXK][EXN]
10	22679-47301		GROMMET	ｸﾞﾛﾒｯﾄ	2	[EXB][EXC][EXE][EXK][EXN]
11	539A2-82251		SEAL,COVER	ｼｰﾙ	1	[EXB][EXC][EXE][EXK][EXN]

FIG.102 REAR PIPE [RW]

(F60351A0) ﾘﾔｰﾊﾟｲﾌﾟ

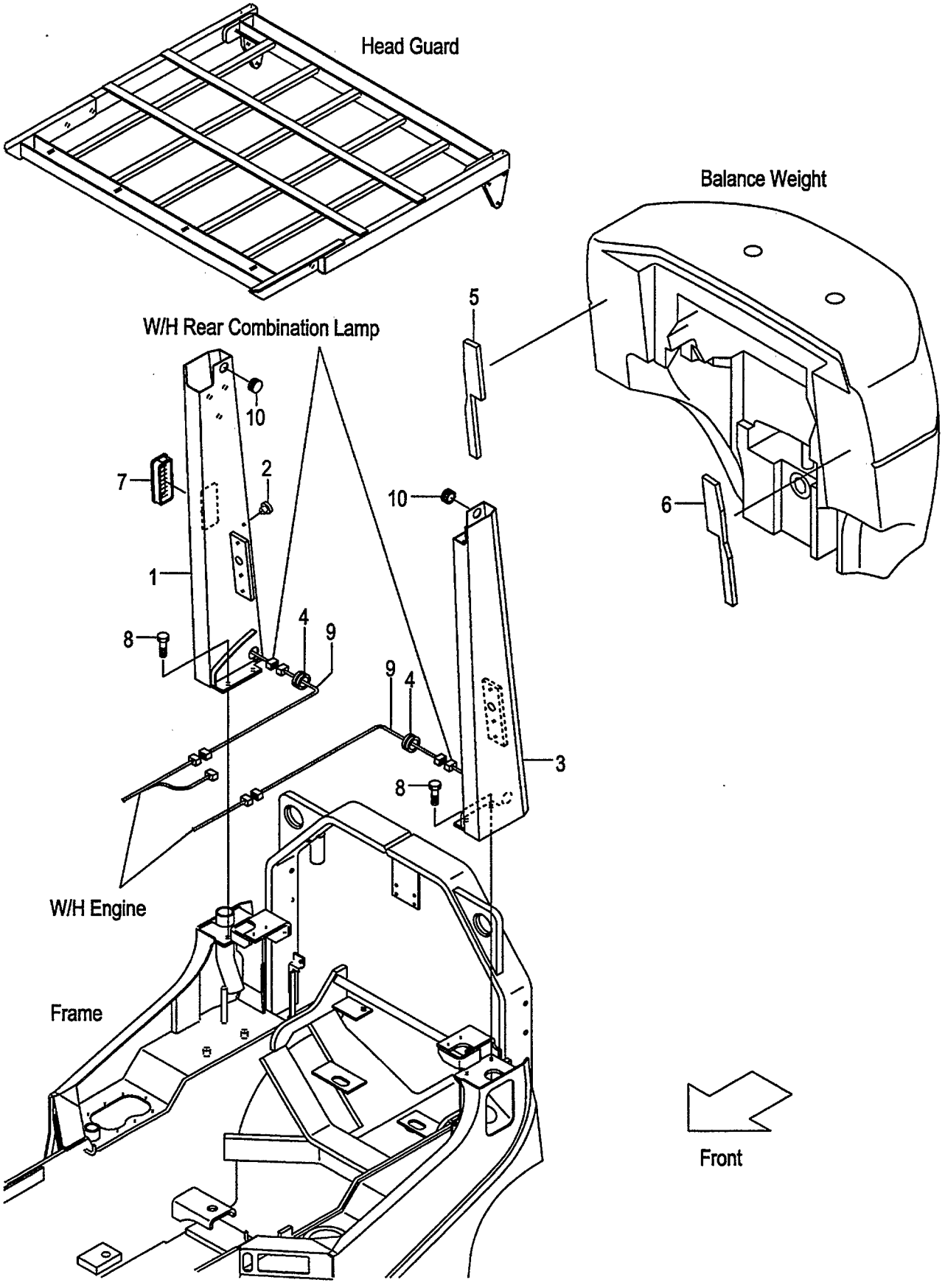

FIG.102
(F60351A0)

A:FD30C7 FD30T7 FD30W7

Item No	Part No.	Mark	Description		Req'd	Remarks : Serial No.
A1	539C1-90101		PIPE-ASSY,REAR,RH	ﾘﾔｰﾊﾟｲﾌﾟｱｯｾﾝ	1	[RW] INC.1,2
1	NO PART NO.	#	PIPE,REAR,RH	ﾊﾟｲﾌﾟ	1	[RW]
2	514A5-12011		RIVET,POP	ﾘﾍﾞｯﾄ	1	[RW]
3	539C1-90211		PIPE,REAR,LH	ﾊﾟｲﾌﾟ	1	[RW]
4	524W5-12091		GROMMET	ｸﾞﾛﾒｯﾄ	2	[RW]
5	239A5-12401		RUBBER,WEIGHT,RH	ﾗﾊﾞｰ	1	[RW]
6	239A5-12411		RUBBER,WEIGHT,LH	ﾗﾊﾞｰ	1	[RW]
7	230C1-02041		COVER,AIR-INTAKE	ｶﾊﾞｰ	1	[RW]
8	01186-12025		BOLT	ﾎﾞﾙﾄ	4	[RW]
9	229F2-42141		WIRE-HARNESS,R-COMB.	ﾜｲﾔﾊｰﾈｽ	2	[RW]
10	27662-62721		GROMMET	ｸﾞﾛﾒｯﾄ	2	[RW]

FIG.103 FRONT LAMP BRACKET

(F6035150) フロントランプブラケット

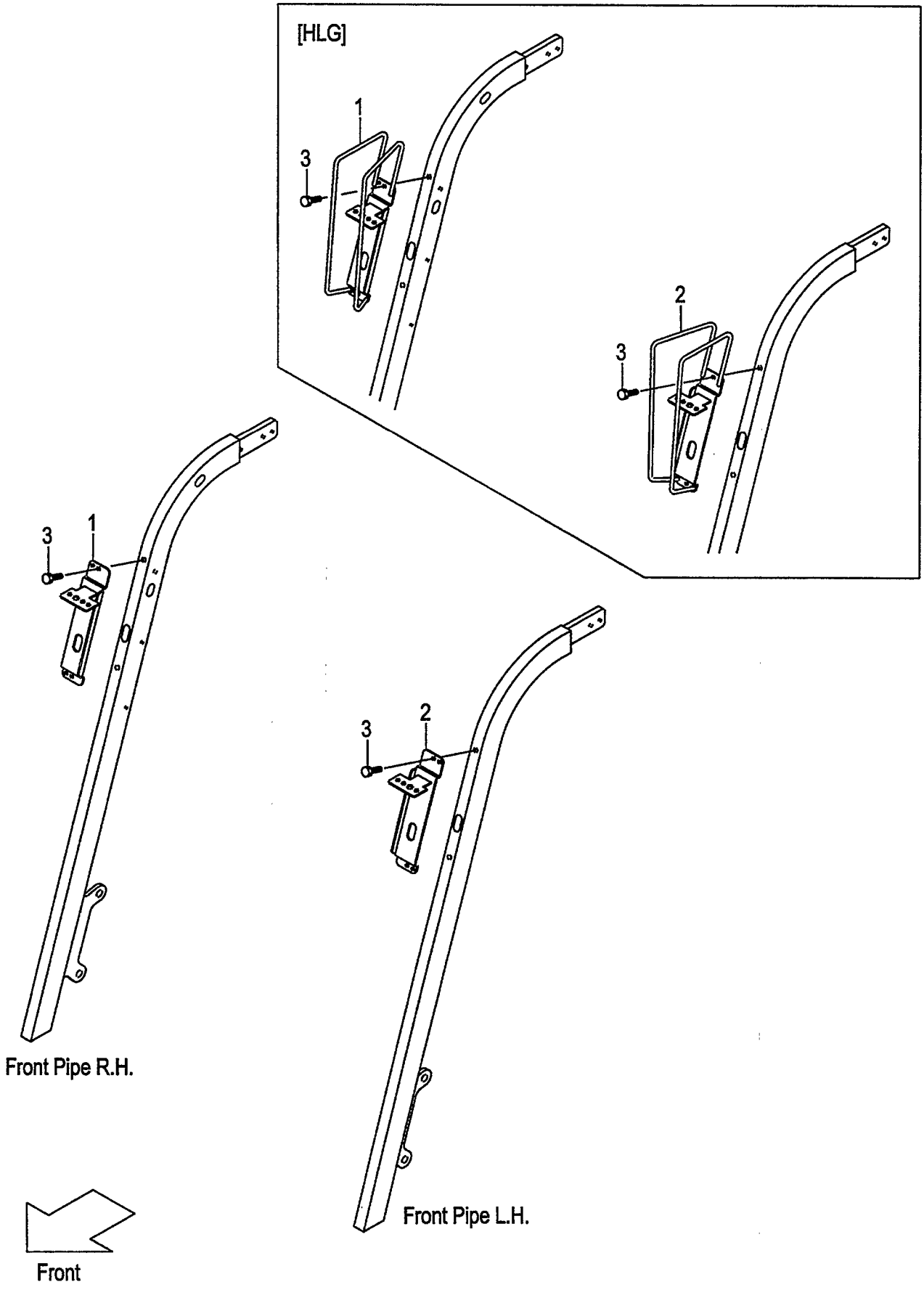

FIG.103
(F6035150)

A:FD30C7 FD30T7 FD30W7

Item No	Part No.	Mark	Description	Req'd	Remarks : Serial No.
1	239A5-12501		BRACKET,HEAD-LAMP,RH ﾌﾞﾗｹｯﾄ	1	(WITHOUT SCB001,SCBCR)
-	539A5-12041		BRACKET,HEAD-LAMP,RH ﾌﾞﾗｹｯﾄ	1	[HLG]
2	239A5-12521		BRACKET,HEAD-LAMP,LH ﾌﾞﾗｹｯﾄ	1	(WITHOUT SCB001,SCBCR)
-	539A5-12011		BRACKET,HEAD-LAMP,LH ﾌﾞﾗｹｯﾄ	1	[HLG]
3	01183-08016		BOLT ﾎﾞﾙﾄ	4	(WITHOUT SCB001,SCBCR)

FIG.104 FRONT LAMP BRACKET [HL][BKH]

(F60351B0) フロントランプブラケット

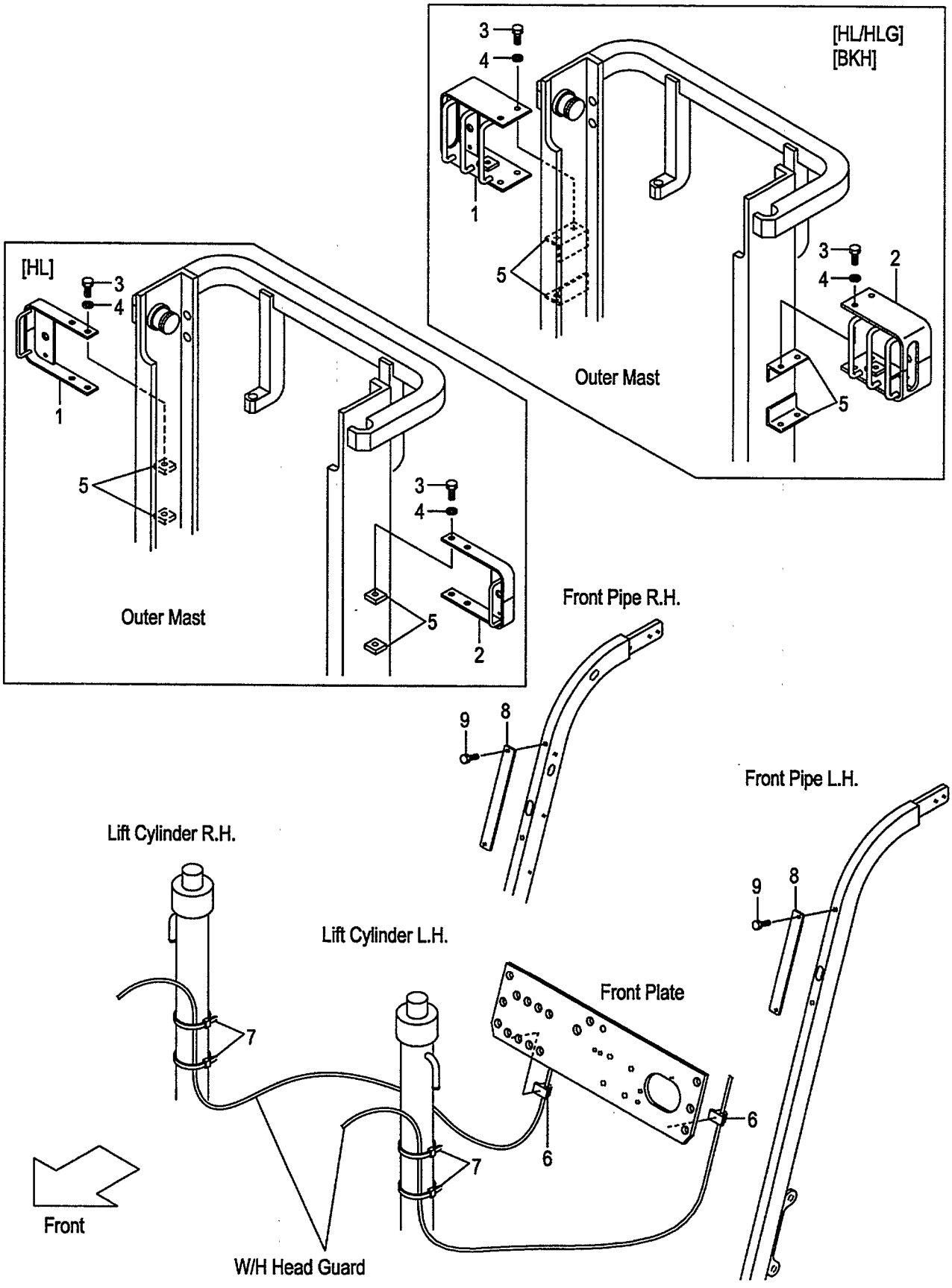

FIG.104
(F60351B0)

A:FD30C7 FD30T7 FD30W7

Item No	Part No.	Mark	Description	Req'd	Remarks : Serial No.
1	534A9-22001		BRACKET,HEAD-LAMP,RH ﾌﾞﾗｹｯﾄ	1	[HL]
-	534A4-22001		BRACKET,HEAD-LAMP,RH ﾌﾞﾗｹｯﾄ	1	[HL/HLG][BKH]
2	534A9-22011		BRACKET,HEAD-LAMP,LH ﾌﾞﾗｹｯﾄ	1	[HL]
-	534A4-22011		BRACKET,HEAD-LAMP,LH ﾌﾞﾗｹｯﾄ	1	[HL/HLG][BKH]
3	01100-12020		BOLT ﾎﾞﾙﾄ	4	[HL][HL/HLG][BKH]
4	02010-00012		WASHER ﾜｯｼｬ	4	[HL][HL/HLG][BKH]
5	534A9-22101		PLATE,TAPPED ﾌﾟﾚｰﾄ	4	[HL]
-	534A4-22101		BRACKET ﾌﾞﾗｹｯﾄ	4	[HL/HLG][BKH]
6	27732-42221		CLAMP,HARNESS ｸﾗﾝﾌﾟ	2	[HL][HL/HLG][BKH]
7	04913-11380		BAND,INSHULOCK ﾊﾞﾝﾄﾞ	4	[HL][HL/HLG][BKH]
8	534A9-22301		PLATE ﾌﾟﾚｰﾄ	2	[HL][HL/HLG][BKH]
9	01183-08016		BOLT ﾎﾞﾙﾄ	4	[HL][HL/HLG][BKH]

FIG.105 REAR LAMP BRACKET

(F6035160) リヤーランプブラケット

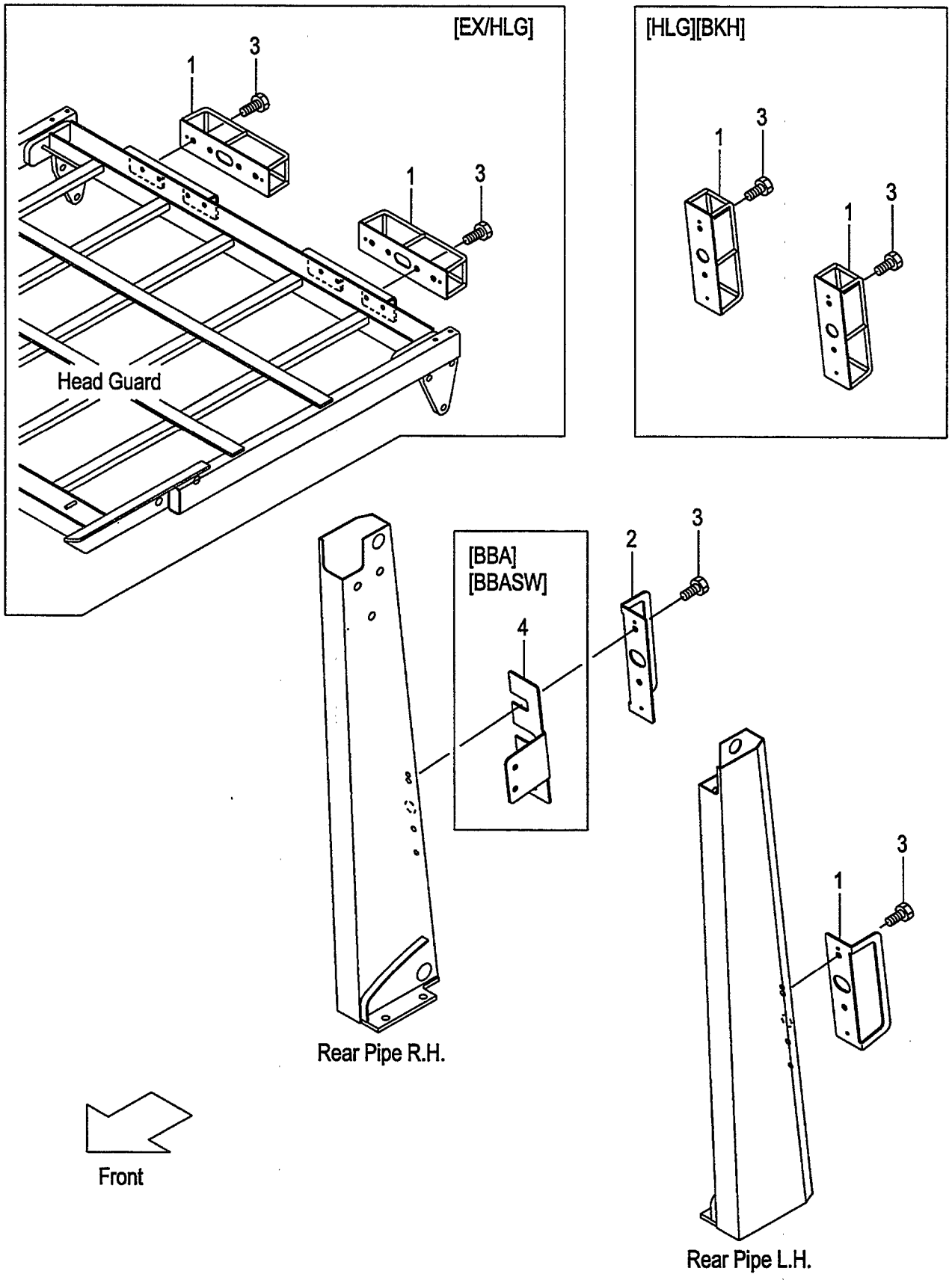

A:FD30C7 FD30T7
B:FD30W7

FIG.105
(F6035160)

Item No	Part No.	Mark	Description		Req'd	Remarks : Serial No.
1	534A5-12321		GUARD,REAR-LAMP,LH	ｶﾞｰﾄﾞ	1	(WITHOUT EX)
-	524W5-13351		GUARD,REAR-LAMP	ｶﾞｰﾄﾞ	2	[HLG][BKH]
-	539A5-12101		GUARD,REAR-LAMP	ｶﾞｰﾄﾞ	2	A [EX/HLG]
2	534A5-12331		GUARD,REAR-LAMP,RH	ｶﾞｰﾄﾞ	1	(WITHOUT EX,HLG,BKH)
3	01183-08016		BOLT	ﾎﾞﾙﾄ	4	(WITHOUT EX)
-	01183-08016		BOLT	ﾎﾞﾙﾄ	8	A [EX/HLG]
4	539A1-32001		BRACKET	ﾌﾞﾗｹｯﾄ	1	[BBA][BBASW]

FIG.106 HEAD GUARD PARTS

(F6035170) ﾍｯﾄﾞｶﾞｰﾄﾞﾊﾟｰﾂ

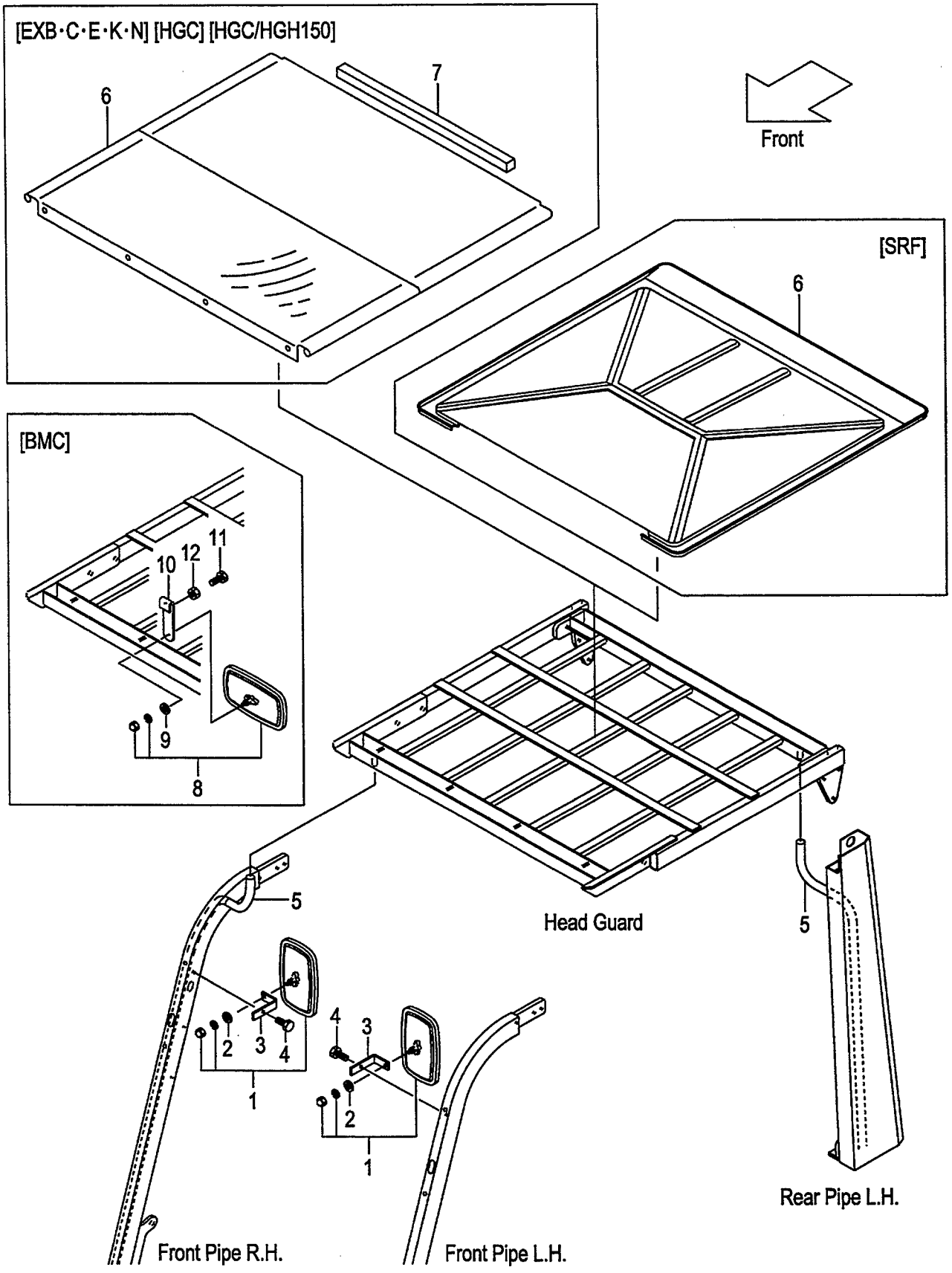

A:FD30C7 FD30T7
B:FD30W7

FIG.106
(F6035170)

Item No	Part No.	Mark	Description		Req'd	Remarks : Serial No.
1	239A9-92001		MIRROR	ミラー	2	
2	222A9-32011		WASHER	ワッシャ	2	
3	534A5-12571		BRACKET,BACK-MIRROR	ブラケット	2	
4	514A5-12021		BOLT	ボルト	2	
5	534A5-00401		HOSE,VINYL	ホース	2	
-	516M5-12311		HOSE,VINYL	ホース	2	A
						[EXN]
-	516G5-12511		HOSE,VINYL	ホース	2	[HGL]
-	516M5-12311		HOSE,VINYL	ホース	2	[HGH060]
-	534A5-00411		HOSE,VINYL	ホース	2	[HGH150]
6	539A5-12001		CANVAS	キャンバス	1	A
						[EXB][EXC][EXE][EXK][EXN]
						(WITHOUT HGCZZZ/EX)
-	539A5-10501		ROOF,SUN	ルーフ	1	[SRF]
-	539A5-12001		CANVAS	キャンバス	1	[HGC]
-	539A5-00261		CANVAS	キャンバス	1	[HGC/HGH150]
7	516G5-13511		SUPPORTER	サポータ	1	A
						[EXB][EXC][EXE][EXK][EXN]
						(WITHOUT HGCZZZ/EX)
-	516G5-13511		SUPPORTER	サポータ	1	[HGC][HGC/HGH150]
8	239A9-92001		MIRROR	ミラー	1	[BMC]
9	222A9-32011		WASHER	ワッシャ	1	[BMC]
10	539A9-32001		BRACKET,BACK-MIRROR	ブラケット	1	[BMC]
11	01100-08025		BOLT	ボルト	2	[BMC]
12	01402-00008		NUT	ナット	2	[BMC]

FIG.107 ACCEL PEDAL

(F6035220) アクセルペダル

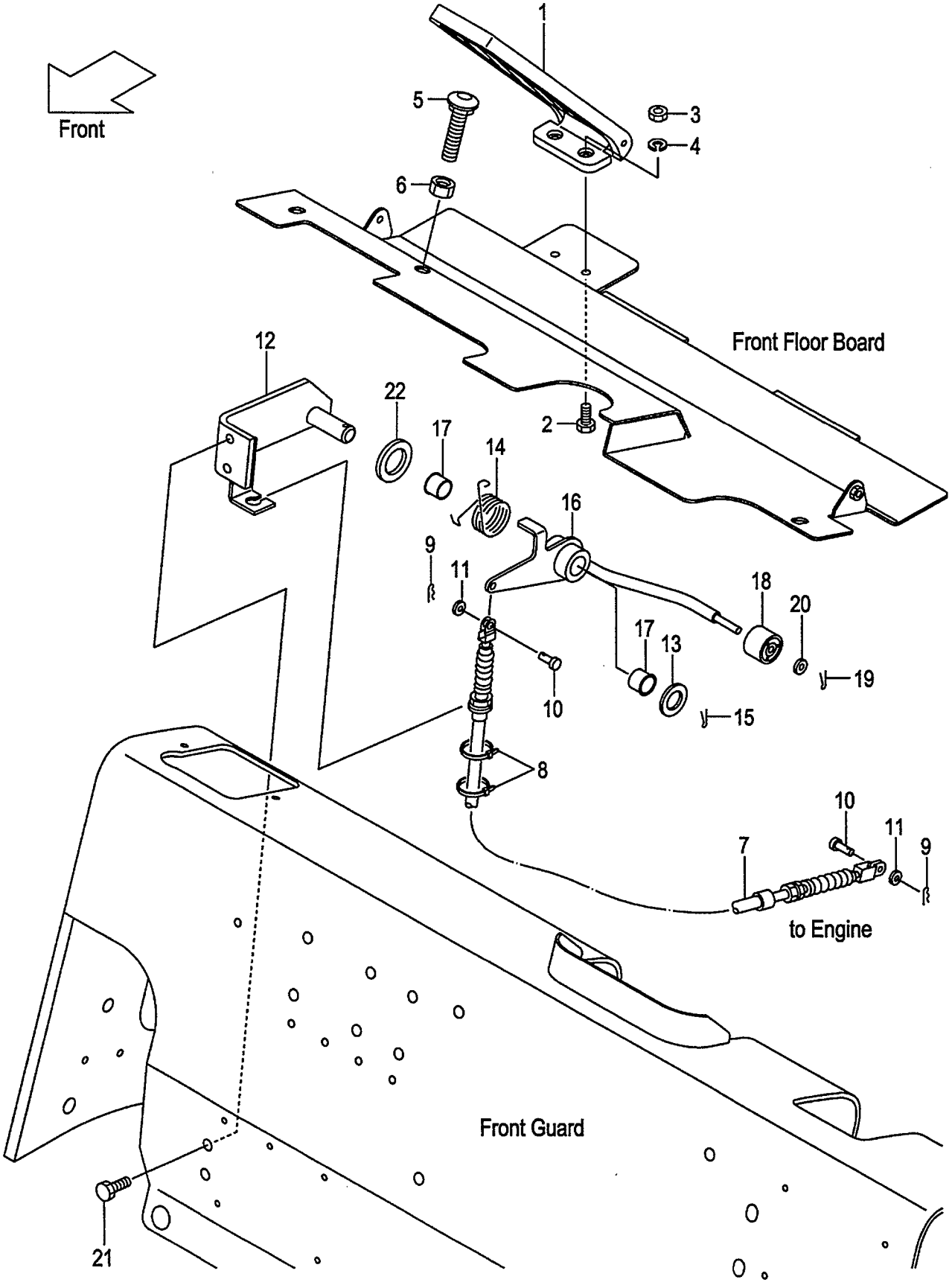

A:FD30C7 FD30T7 FD30W7

Item No	Part No.	Mark	Description		Req'd	Remarks : Serial No.
1	214A5-22051		PEDAL,ACCEL	ﾍﾟﾀﾞﾙ	1	
2	01100-06012		BOLT	ﾎﾞﾙﾄ	2	
3	01400-00006		NUT	ﾅｯﾄ	2	
4	02010-00006		WASHER	ﾜｯｼｬ	2	
5	216G5-22101		BOLT,CAP-SQUARE-NECK	ﾎﾞﾙﾄ	1	
6	01400-00012		NUT	ﾅｯﾄ	1	
7	242F5-22001		WIRE,ACCEL	ﾜｲﾔ	1	
8	27042-42312		BAND,CABLE	ﾊﾞﾝﾄﾞ	2	
9	216G5-22081		PIN,SNAP	ﾋﾟﾝ	2	
10	02262-06015		PIN,CLEVIS	ﾋﾟﾝ	2	
11	02000-00006		WASHER	ﾜｯｼｬ	2	
12	239A5-20402		BRACKET,ACCEL-LINK	ﾌﾞﾗｹｯﾄ	1	
13	02000-00016		WASHER	ﾜｯｼｬ	1	
14	239A5-22253		SPRING	ｽﾌﾟﾘﾝｸﾞ	1	
15	02200-04025		PIN,COTTER	ﾋﾟﾝ	1	
A1	239A5-20302		LINK-ASSY,ACCEL	ｱｸｾﾙﾘﾝｸｱｯｾﾝ	1	INC.16-20
16	NO PART NO.	#	LINK,ACCEL	ﾘﾝｸ	1	
17	214A7-42071		BUSHING	ﾌﾞｯｼﾝｸﾞ	2	
18	214A5-22001		ROLLER	ﾛｰﾗ	1	
19	02200-16010		PIN,COTTER	ﾋﾟﾝ	1	
20	02000-00006		WASHER	ﾜｯｼｬ	1	
21	01183-08016		BOLT	ﾎﾞﾙﾄ	2	
22	239A5-22151		WASHER	ﾜｯｼｬ	1	

FIG.108 FOOT PEDAL (CLUTCH)

(F6035410) ﾌｯﾄﾍﾟﾀﾞﾙ

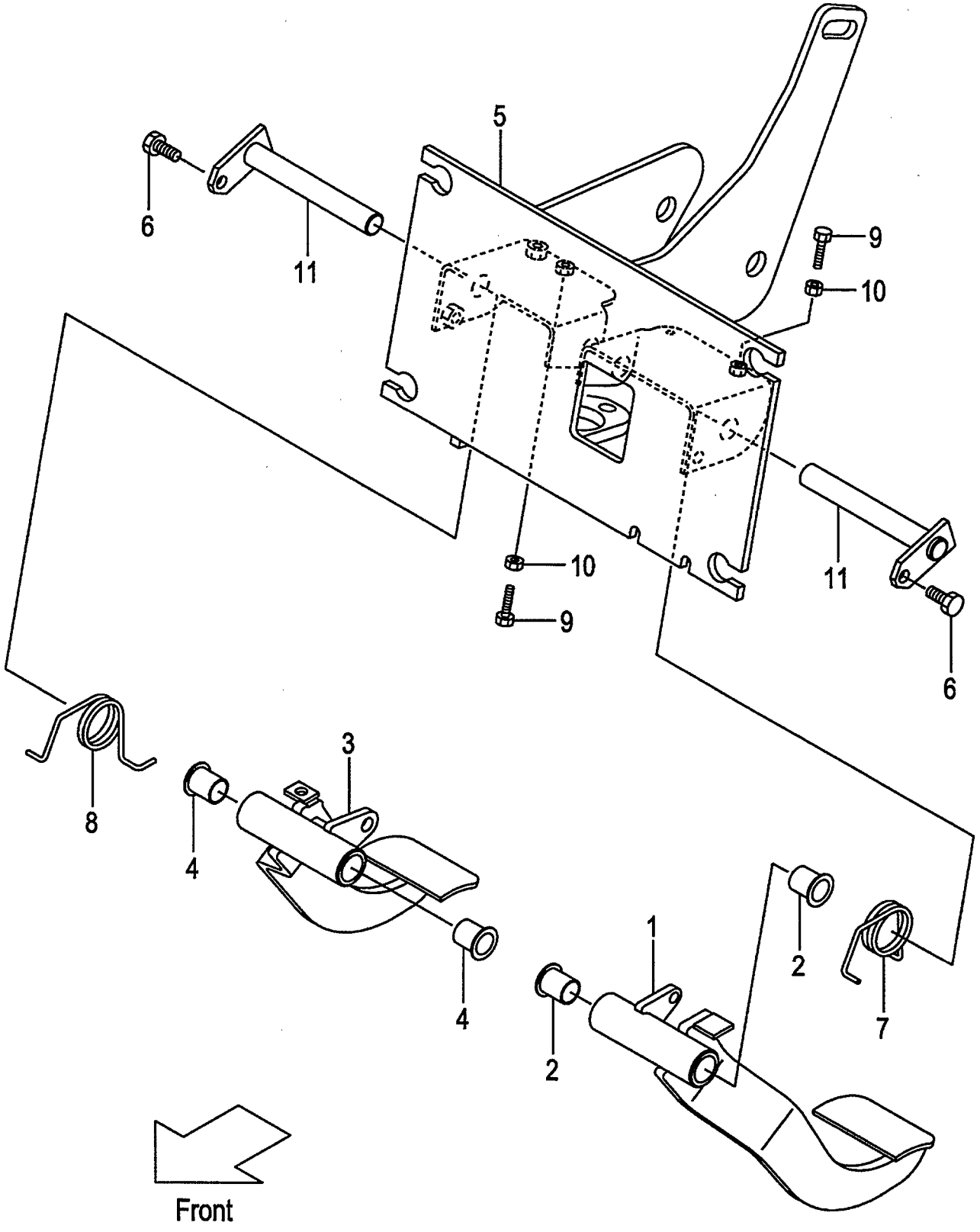

A:FD30C7

Item No	Part No.	Mark	Description		Req'd	Remarks : Serial No.
A1	238F5-40071		PEDAL-ASSY,CLUTCH	ｸﾗｯﾁﾍﾟﾀﾞﾙｱｯｾﾝ	1	INC.1,2
1	NO PART NO.	#	PEDAL,CLUTCH	ﾍﾟﾀﾞﾙ	1	
2	239B5-42221		BUSHING	ﾌﾞｯｼﾝｸﾞ	2	
A2	238F5-40061		PEDAL-ASSY,BRAKE	ﾌﾞﾚｰｷﾍﾟﾀﾞﾙｱｯｾﾝ	1	INC.3,4
3	NO PART NO.	#	PEDAL,BRAKE	ﾍﾟﾀﾞﾙ	1	
4	239B5-42221		BUSHING	ﾌﾞｯｼﾝｸﾞ	2	
5	238F5-40202		BRACKET,PEDAL	ﾌﾞﾗｹｯﾄ	1	
6	01186-08016		BOLT	ﾎﾞﾙﾄ	2	
7	239B5-42201		SPRING	ｽﾌﾟﾘﾝｸﾞ	1	
8	239B5-42211		SPRING	ｽﾌﾟﾘﾝｸﾞ	1	
9	01120-08035		BOLT	ﾎﾞﾙﾄ	2	
10	01402-00008		NUT	ﾅｯﾄ	2	
11	238F5-40501		SHAFT	ｼｬﾌﾄ	2	

FIG.109 FOOT PEDAL (CLUTCH):[PC]

(F6035450) ﾌｯﾄﾍﾟﾀﾞﾙ

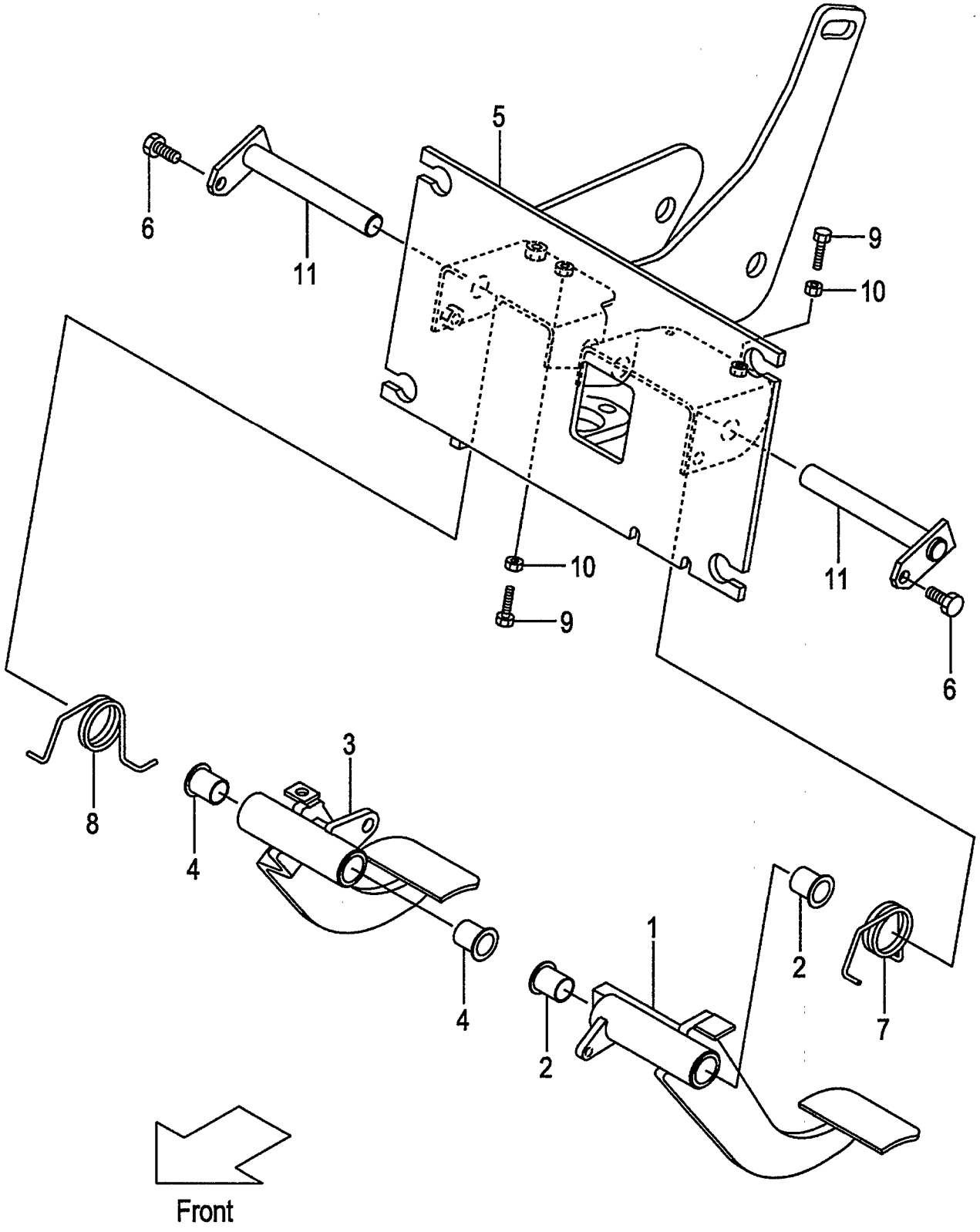

A:FD30C7

Item No	Part No.	Mark	Description		Req'd	Remarks : Serial No.
A1	239H5-40411		PEDAL-ASSY,INCHING	ｲﾝﾁﾝｸﾞﾍﾟﾀﾞﾙｱｯｾﾝ	1	[PC] INC.1,2
1	NO PART NO.	#	PEDAL,INCHING	ﾍﾟﾀﾞﾙ	1	[PC]
2	239B5-42221		BUSHING	ﾌﾞｯｼﾝｸﾞ	2	[PC]
A2	238F5-40061		PEDAL-ASSY,BRAKE	ﾌﾞﾚｰｷﾍﾟﾀﾞﾙｱｯｾﾝ	1	[PC] INC.3,4
3	NO PART NO.	#	PEDAL,BRAKE	ﾍﾟﾀﾞﾙ	1	[PC]
4	239B5-42221		BUSHING	ﾌﾞｯｼﾝｸﾞ	2	[PC]
5	238S5-40202		BRACKET,PEDAL	ﾌﾞﾗｹｯﾄ	1	[PC]
6	01186-08016		BOLT	ﾎﾞﾙﾄ	2	[PC]
7	239B5-42201		SPRING	ｽﾌﾟﾘﾝｸﾞ	1	[PC]
8	239B5-42211		SPRING	ｽﾌﾟﾘﾝｸﾞ	1	[PC]
9	01120-08035		BOLT	ﾎﾞﾙﾄ	2	[PC]
10	01402-00008		NUT	ﾅｯﾄ	2	[PC]
11	238F5-40501		SHAFT	ｼｬﾌﾄ	2	[PC]

FIG.110 FOOT PEDAL (TOR-CON)

(F60354A0) ﾌｯﾄﾍﾟﾀﾞﾙ

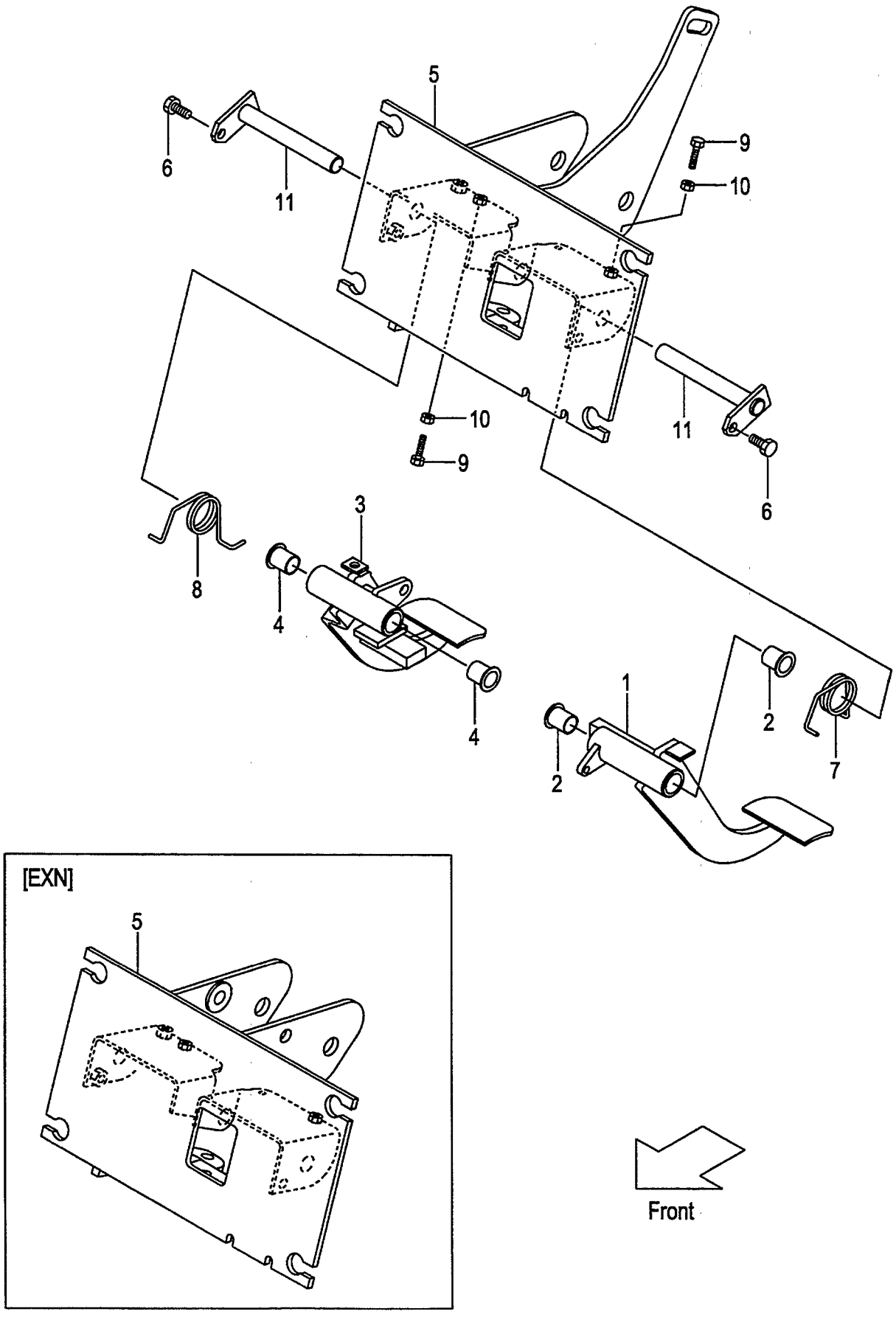

FIG.110
(F60354A0)

A:FD30T7

Item No	Part No.	Mark	Description		Req'd	Remarks : Serial No.
A1	238G5-40031		PEDAL-ASSY,INCHING	ｲﾝﾁﾝｸﾞﾍﾟﾀﾞﾙｱｯｾﾝ	1	INC.1,2
1	NO PART NO.	#	PEDAL,INCHING	ﾍﾟﾀﾞﾙ	1	
2	239B5-42221		BUSHING	ﾌﾞｯｼﾝｸﾞ	2	
A2	238G5-40021		PEDAL-ASSY,BRAKE	ﾌﾞﾚｰｷﾍﾟﾀﾞﾙｱｯｾﾝ	1	INC.3,4
3	NO PART NO.	#	PEDAL,BRAKE	ﾍﾟﾀﾞﾙ	1	
4	239B5-42221		BUSHING	ﾌﾞｯｼﾝｸﾞ	2	
5	238G5-40202		BRACKET,PEDAL	ﾌﾞﾗｹｯﾄ	1	
-	538G2-60202		BRACKET,PEDAL	ﾌﾞﾗｹｯﾄ	1	[EXN]
6	01186-08016		BOLT	ﾎﾞﾙﾄ	2	
7	239B5-42201		SPRING	ｽﾌﾟﾘﾝｸﾞ	1	
8	239B5-42211		SPRING	ｽﾌﾟﾘﾝｸﾞ	1	
9	01120-08035		BOLT	ﾎﾞﾙﾄ	2	
10	01402-00008		NUT	ﾅｯﾄ	2	
11	238F5-40501		SHAFT	ｼｬﾌﾄ	2	

FIG.111 FOOT PEDAL (OIL CLUTCH)

(F60354C0) ﾌｯﾄﾍﾟﾀﾞﾙ

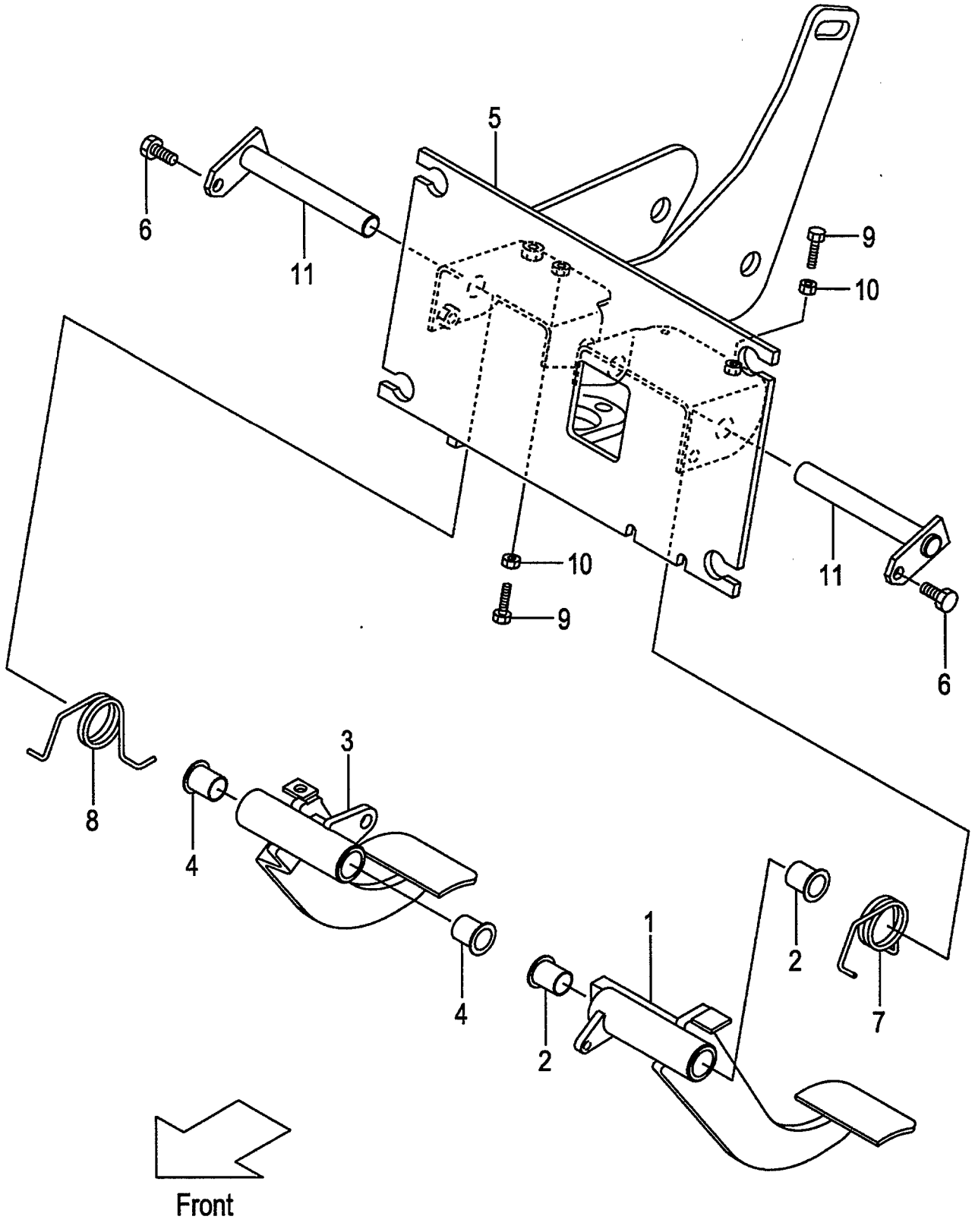

A:FD30W7

Item No	Part No.	Mark	Description		Req'd	Remarks : Serial No.
A1	239H5-40411		PEDAL-ASSY,INCHING	ｲﾝﾁﾝｸﾞﾍﾟﾀﾞﾙｱｯｾﾝ	1	INC.1,2
1	NO PART NO.	#	PEDAL,INCHING	ﾍﾟﾀﾞﾙ	1	
2	239B5-42221		BUSHING	ﾌﾞｯｼﾝｸﾞ	2	
A2	238F5-40061		PEDAL-ASSY,BRAKE	ﾌﾞﾚｰｷﾍﾟﾀﾞﾙｱｯｾﾝ	1	INC.3,4
3	NO PART NO.	#	PEDAL,BRAKE	ﾍﾟﾀﾞﾙ	1	
4	239B5-42221		BUSHING	ﾌﾞｯｼﾝｸﾞ	2	
5	238S5-40202		BRACKET,PEDAL	ﾌﾞﾗｹｯﾄ	1	
6	01186-08016		BOLT	ﾎﾞﾙﾄ	2	
7	239B5-42201		SPRING	ｽﾌﾟﾘﾝｸﾞ	1	
8	239B5-42211		SPRING	ｽﾌﾟﾘﾝｸﾞ	1	
9	01120-08035		BOLT	ﾎﾞﾙﾄ	2	
10	01402-00008		NUT	ﾅｯﾄ	2	
11	238F5-40501		SHAFT	ｼｬﾌﾄ	2	

FIG.112 FOOT PEDAL CYLINDER (CLUTCH)

(F6035420) フットペダルシリンダ

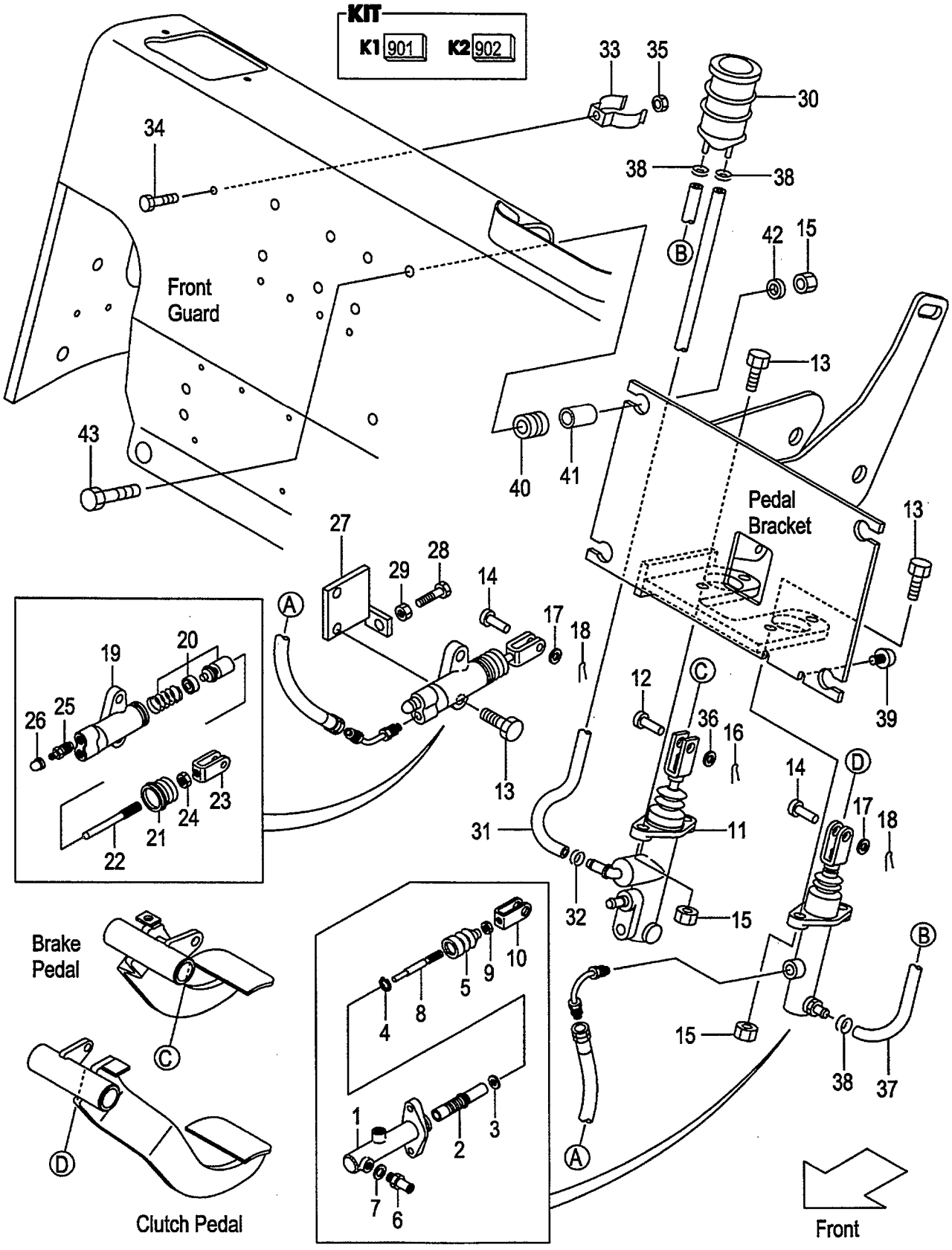

A:FD30C7

Item No	Part No.	Mark	Description		Req'd	Remarks : Serial No.
A1	239A5-40501		CYL-ASSY,CLUTCH-MASTER	ｼﾘﾝﾀﾞｱｯｾﾝ	1	INC.1-10
901	216G5-32201	K1	KIT,REPAIR	ﾘﾍﾟｱｷｯﾄ	1	INC.2-5
1	NO PART NO.	#	BODY,CYL	ﾎﾞﾃﾞｨ	1	
2	NO PART NO.	#*	PISTON	ﾋﾟｽﾄﾝ	1	
3	216G5-32311	*	PLATE,PISTON-STOPPER	ﾌﾟﾚｰﾄ	1	
4	25595-42311	*	RING,SNAP	ｽﾅｯﾌﾟﾘﾝｸﾞ	1	
5	216G5-32321	*	BOOT	ﾌﾞｰﾂ	1	
6	216G5-32331		UNION	ﾕﾆｵﾝ	1	
7	216G5-32341		GASKET	ｶﾞｽｹｯﾄ	1	
8	NO PART NO.	#	ROD,PUSH	ﾛｯﾄﾞ	1	
9	01402-00008		NUT	ﾅｯﾄ	1	
10	25595-42452		CLEVIS	ｸﾚﾋﾞｽ	1	
11	239A5-40102		CYL,BRAKE-MASTER	ｼﾘﾝﾀﾞ	1	SEE FIG.121
12	02262-10030		PIN,CLEVIS	ﾋﾟﾝ	1	
13	01184-10030		BOLT	ﾎﾞﾙﾄ	6	
14	02262-08025		PIN,CLEVIS	ﾋﾟﾝ	2	
15	01400-00010		NUT	ﾅｯﾄ	8	
16	02200-32025		PIN,COTTER	ﾋﾟﾝ	1	
17	02000-00008		WASHER	ﾜｯｼｬ	2	
18	02200-02020		PIN,COTTER	ﾋﾟﾝ	2	
A2	214A5-32312		CYL-ASSY,CLUTCH-RELEASE	ｼﾘﾝﾀﾞｱｯｾﾝ	1	INC.19-26
902	214A5-33012	K2	KIT,REPAIR	ﾘﾍﾟｱｷｯﾄ	1	INC.20,21
19	NO PART NO.	#	BODY,CYL	ﾎﾞﾃﾞｨ	1	
20	NO PART NO.	#*	PISTON	ﾋﾟｽﾄﾝ	1	
21	NO PART NO.	#*	BOOT	ﾌﾞｰﾂ	1	
A3	214A5-33052		ROD-ASSY,PUSH	ﾌﾟｯｼｭﾛｯﾄﾞｱｯｾﾝ	1	INC.22-24
22	214A5-33062		ROD,PUSH	ﾛｯﾄﾞ	1	
23	25595-42452		CLEVIS	ｸﾚﾋﾞｽ	1	
24	01402-00008		NUT	ﾅｯﾄ	1	
25	214A5-33031		VALVE,BLEEDER	ﾊﾞﾙﾌﾞ	1	
26	214A5-33041		CAP,BLEEDER	ｷｬｯﾌﾟ	1	
27	214A5-32101		BRACKET,RELEASE-CYL	ﾌﾞﾗｹｯﾄ	1	
28	01100-10030		BOLT	ﾎﾞﾙﾄ	1	
29	01402-00010		NUT	ﾅｯﾄ	1	
30	216G5-42011		TANK,RESERVE	ﾀﾝｸ	1	
31	239A5-42411		HOSE,RESERVE	ﾎｰｽ	1	
32	25595-42491		CLIP,HOSE	ｸﾘｯﾌﾟ	1	
33	224G5-42061		CLIP,RESERVE-TANK	ｸﾘｯﾌﾟ	1	
34	239A5-42381		BOLT	ﾎﾞﾙﾄ	1	
35	01400-00006		NUT	ﾅｯﾄ	1	
36	02000-00010		WASHER	ﾜｯｼｬ	1	
37	239A5-42401		HOSE,RESERVE	ﾎｰｽ	1	
38	25785-43091		CLIP,HOSE	ｸﾘｯﾌﾟ	3	
39	23456-42181		STOPPER	ｽﾄｯﾊﾟ	1	
40	238F5-42601		RUBBER,MOUNT	ﾗﾊﾞｰ	4	
41	216G7-32011		COLLAR	ｶﾗｰ	4	
42	22252-32251		WASHER	ﾜｯｼｬ	4	
43	216G6-43241		BOLT	ﾎﾞﾙﾄ	4	

FIG.113 FOOT PEDAL CYLINDER (CLUTCH):[PC]

(F6035460) ﾌｯﾄﾍﾟﾀﾞﾙｼﾘﾝﾀﾞ

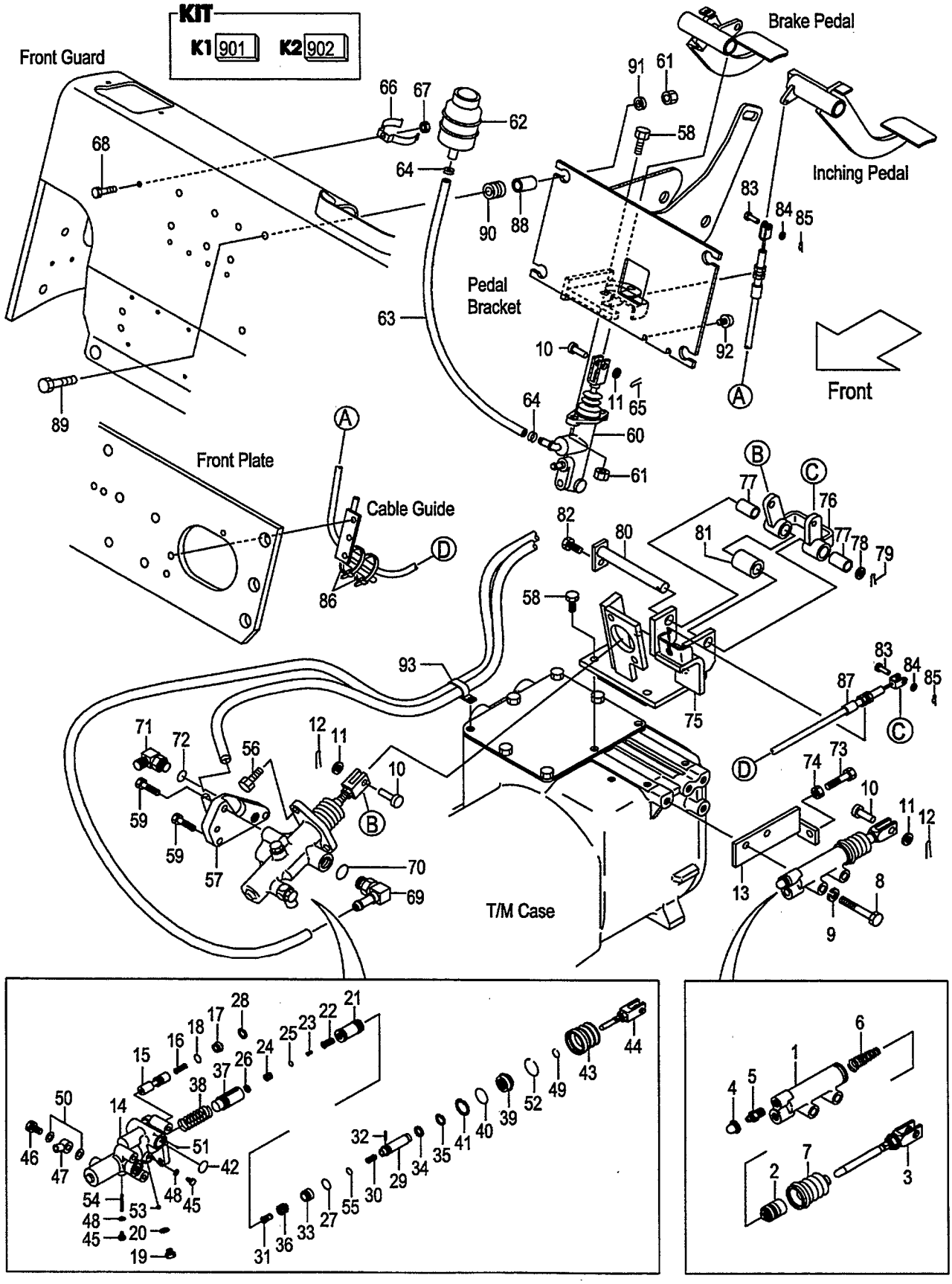

A:FD30C7

Item No	Part No.	Mark	Description		Req'd	Remarks : Serial No.
A1	522A2-10401		CYL-ASSY,CLUTCH-RELEASE	ｼﾘﾝﾀﾞｱｯｾﾝ	1	[PC] INC.1-7
901	522A2-11601	K1	KIT,OVERHAUL	ｵｰﾊﾞｰﾎｰﾙｷｯﾄ	1	[PC] INC.2,4,6,7
1	NO PART NO.	#	BODY,CYL	ﾎﾞﾃﾞｨ	1	[PC]
2	522A2-18541	*	PISTON,RELEASE-CYL	ﾋﾟｽﾄﾝ	1	[PC]
3	522A2-18551		ROD,PUSH	ﾛｯﾄﾞ	1	[PC]
4	522A2-18561	*	CAP,BLEEDER-PLUG	ｷｬｯﾌﾟ	1	[PC]
5	522A2-18571		PLUG,BLEEDER	ﾌﾟﾗｸﾞ	1	[PC]
6	522A2-18581	*	SPRING,CONICAL	ｽﾌﾟﾘﾝｸﾞ	1	[PC]
7	522A2-18591	*	BOOT	ﾌﾞｰﾂ	1	[PC]
8	01103-10060		BOLT	ﾎﾞﾙﾄ	2	[PC]
9	02010-00010		WASHER	ﾜｯｼｬ	2	[PC]
10	02262-10030		PIN,CLEVIS	ﾋﾟﾝ	3	[PC]
11	02000-00010		WASHER	ﾜｯｼｬ	3	[PC]
12	02200-32020		PIN,COTTER	ﾋﾟﾝ	2	[PC]
13	214L5-32101		BRACKET,RELEASE-CYL	ﾌﾞﾗｹｯﾄ	1	[PC]
A2	224W5-30202		BOOSTER-ASSY,CLUTCH	ｸﾗｯﾁﾌﾞｰｽﾀｱｯｾﾝ	1	[PC] INC.14-55
902	224W5-32501	K2	KIT,OVERHAUL	ｵｰﾊﾞｰﾎｰﾙｷｯﾄ	1	[PC] INC.18,20,21,25-28,32,35, 37,39-43,48-55
14	NO PART NO.	#	BODY,BOOSTER	ﾎﾞﾃﾞｨ	1	[PC]
15	224W5-32511		SPOOL,FLOW-DIVIDER	ｽﾌﾟｰﾙ	1	[PC]
16	522A2-18011		SPRING,FLOW-DIVIDER	ｽﾌﾟﾘﾝｸﾞ	1	[PC]
17	522A2-18021		PLUG	ﾌﾟﾗｸﾞ	1	[PC]
18	522A2-18031	*	O-RING	Oﾘﾝｸﾞ	1	[PC]
19	522A2-18041		PLUG	ﾌﾟﾗｸﾞ	1	[PC]
20	522A2-18051	*	GASKET	ｶﾞｽｹｯﾄ	1	[PC]
21	224W5-32401	*	PISTON,POWER	ﾋﾟｽﾄﾝ	1	[PC]
22	522A2-18071		VALVE,CONTROL	ﾊﾞﾙﾌﾞ	1	[PC]
23	522A2-18081		SPRING,CONTROL-VALVE	ｽﾌﾟﾘﾝｸﾞ	1	[PC]
24	522A2-18091		PLUG,PISTON	ﾌﾟﾗｸﾞ	1	[PC]
25	522A2-18101	*	O-RING	Oﾘﾝｸﾞ	1	[PC]
26	522A2-18111	*	RING,SNAP	ｽﾅｯﾌﾟﾘﾝｸﾞ	1	[PC]
27	522A2-18121	*	O-RING	Oﾘﾝｸﾞ	1	[PC]
28	522A2-18131	*	RING,SNAP	ｽﾅｯﾌﾟﾘﾝｸﾞ	1	[PC]
29	224W5-42401		PISTON,REACTION	ﾋﾟｽﾄﾝ	1	[PC]
30	224W5-32421		SPRING,RELIEF-VALVE	ｽﾌﾟﾘﾝｸﾞ	1	[PC]
31	522A2-18161		SEAT,CONTROL-VALVE	ｼｰﾄ	1	[PC]
32	522A2-18171	*	PIN	ﾋﾟﾝ	1	[PC]
33	224W5-42431		PISTON,REACTION	ﾋﾟｽﾄﾝ	1	[PC]
34	522A2-18201		WASHER	ﾜｯｼｬ	1	[PC]
35	522A2-18211	*	RING,SNAP	ｽﾅｯﾌﾟﾘﾝｸﾞ	1	[PC]
36	522A2-18221		SPRING,RETURN,VALVE	ｽﾌﾟﾘﾝｸﾞ	1	[PC]
37	224W5-32441	*	PISTON,MASTER-CYL	ﾋﾟｽﾄﾝ	1	[PC]
38	224W5-32551		SPRING,RETURN,PISTON	ｽﾌﾟﾘﾝｸﾞ	1	[PC]
39	224W5-32521	*	GUIDE,REACTION	ｶﾞｲﾄﾞ	1	[PC]
40	224W5-32451	*	O-RING	Oﾘﾝｸﾞ	1	[PC]
41	224W5-32461	*	RING,SNAP	ｽﾅｯﾌﾟﾘﾝｸﾞ	1	[PC]
42	522A2-18281	*	O-RING	Oﾘﾝｸﾞ	2	[PC]
43	224W5-32471	*	BOOT	ﾌﾞｰﾂ	1	[PC]
44	522A2-18301		ROD,PUSH	ﾛｯﾄﾞ	1	[PC]

FIG.113 FOOT PEDAL CYLINDER (CLUTCH):[PC]

(F6035460) ﾌｯﾄﾍﾟﾀﾞﾙｼﾘﾝﾀﾞ

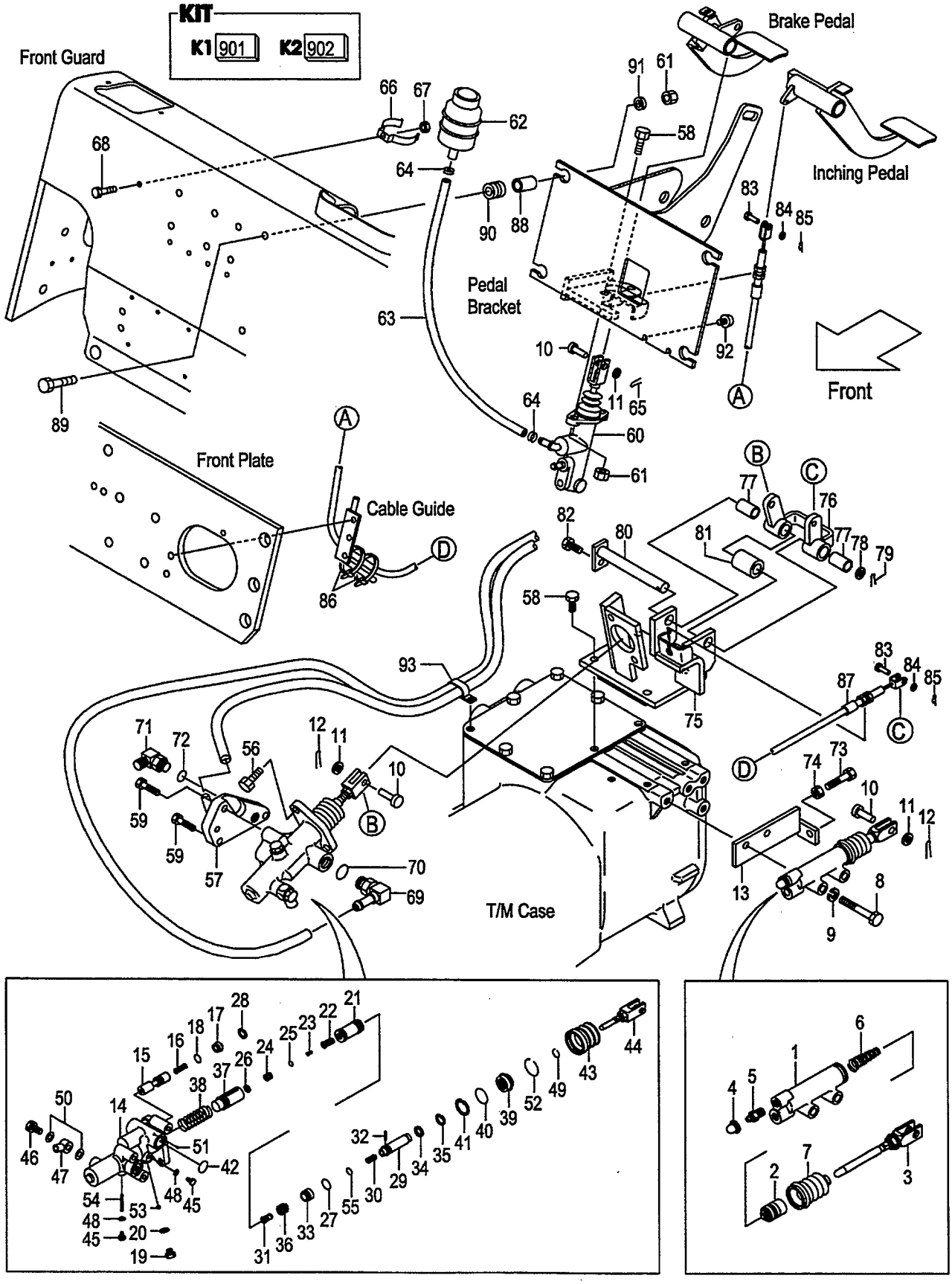

A:FD30C7

Item No	Part No.	Mark	Description		Req'd	Remarks : Serial No.
45	522A2-18311		BOLT	ﾎﾞﾙﾄ	2	[PC]
46	522A2-18341		BOLT,UNION	ﾎﾞﾙﾄ	1	[PC]
47	522A2-18352		UNION	ﾕﾆｵﾝ	1	[PC]
48	522A2-18321	*	GASKET	ｶﾞｽｹｯﾄ	2	[PC]
49	522A2-18331	*	RING,SNAP	ｽﾅｯﾌﾟﾘﾝｸﾞ	1	[PC]
50	522A2-18361	*	GASKET	ｶﾞｽｹｯﾄ	2	[PC]
51	522A2-18371	*	BALL	ﾎﾞｰﾙ	1	[PC]
52	224W5-32481	*	RING,SNAP	ｽﾅｯﾌﾟﾘﾝｸﾞ	1	[PC]
53	522A2-18391	*	BALL	ﾎﾞｰﾙ	1	[PC]
54	224W5-32491	*	PIN	ﾋﾟﾝ	1	[PC]
55	55952-18021	*	O-RING	Oﾘﾝｸﾞ	1	[PC]
56	01184-10025		BOLT	ﾎﾞﾙﾄ	2	[PC]
57	239H5-42461		ADAPTER	ｱﾀﾞﾌﾟﾀ	1	[PC]
58	01184-10030		BOLT	ﾎﾞﾙﾄ	6	[PC]
59	01184-10055		BOLT	ﾎﾞﾙﾄ	3	[PC]
60	239A5-40102		CYL,BRAKE-MASTER	ｼﾘﾝﾀﾞ	1	[PC]SEE FIG.121
61	01400-00010		NUT	ﾅｯﾄ	6	[PC]
62	23775-42101		TANK,RESERVE	ﾀﾝｸ	1	[PC]
63	22655-42591		HOSE,RESERVE	ﾎｰｽ	1	[PC]
64	25595-42491		CLIP,HOSE	ｸﾘｯﾌﾟ	2	[PC]
65	02200-32025		PIN,COTTER	ﾋﾟﾝ	1	[PC]
66	224G5-42061		CLIP,RESERVE-TANK	ｸﾘｯﾌﾟ	1	[PC]
67	01400-00006		NUT	ﾅｯﾄ	1	[PC]
68	239A5-42381		BOLT	ﾎﾞﾙﾄ	1	[PC]
A3	224W7-60311		FITTING-ASSY,HOSE	ﾎｰｽﾌｨｯﾃｨﾝｸﾞｱｯｾﾝ	1	[PC] INC.69,70
69	NO PART NO.	#	FITTING,HOSE	ﾌｨｯﾃｨﾝｸﾞ	1	[PC]
70	89140-00006		O-RING	Oﾘﾝｸﾞ	1	[PC]
A4	04150-20202		ELBOW-ASSY	ｴﾙﾎﾞｱｯｾﾝ	1	[PC] INC.71,72
71	NO PART NO.	#	ELBOW	ｴﾙﾎﾞ	1	[PC]
72	03320-00110		O-RING	Oﾘﾝｸﾞ	1	[PC]
73	01100-10030		BOLT	ﾎﾞﾙﾄ	1	[PC]
74	01402-00010		NUT	ﾅｯﾄ	1	[PC]
A5	239H5-40191		BRACKET-ASSY,BOOSTER	ﾌﾞﾗｹｯﾄｱｯｾﾝ	1	[PC] INC.75-82
75	239H5-40201		BRACKET,BOOSTER	ﾌﾞﾗｹｯﾄ	1	[PC]
A6	239H5-40211		LINK-ASSY	ﾘﾝｸｱｯｾﾝ	1	[PC] INC.76,77
76	239H5-42301		LINK	ﾘﾝｸ	1	[PC]
77	256C7-42281		BUSHING	ﾌﾞｯｼﾝｸﾞ	2	[PC]
78	02000-00016		WASHER	ﾜｯｼｬ	1	[PC]
79	02200-04025		PIN,COTTER	ﾋﾟﾝ	1	[PC]
80	239H5-40311		SHAFT	ｼｬﾌﾄ	1	[PC]
81	239H5-42371		SPACER	ｽﾍﾟｰｻ	1	[PC]
82	01183-08016		BOLT	ﾎﾞﾙﾄ	1	[PC]
83	02262-08020		PIN,CLEVIS	ﾋﾟﾝ	2	[PC]
84	02000-00008		WASHER	ﾜｯｼｬ	2	[PC]
85	02200-02016		PIN,COTTER	ﾋﾟﾝ	2	[PC]
86	04913-11200		BAND	ﾊﾞﾝﾄﾞ	2	[PC]
87	239H5-42451		CABLE,INCHING	ｹｰﾌﾞﾙ	1	[PC]
88	216G7-32011		COLLAR	ｶﾗｰ	4	[PC]
89	216G6-43241		BOLT	ﾎﾞﾙﾄ	4	[PC]
90	238F5-42601		RUBBER,MOUNT	ﾗﾊﾞｰ	4	[PC]

FIG.113 FOOT PEDAL CYLINDER (CLUTCH):[PC]

(F6035460) ﾌｯﾄﾍﾟﾀﾞﾙｼﾘﾝﾀﾞ

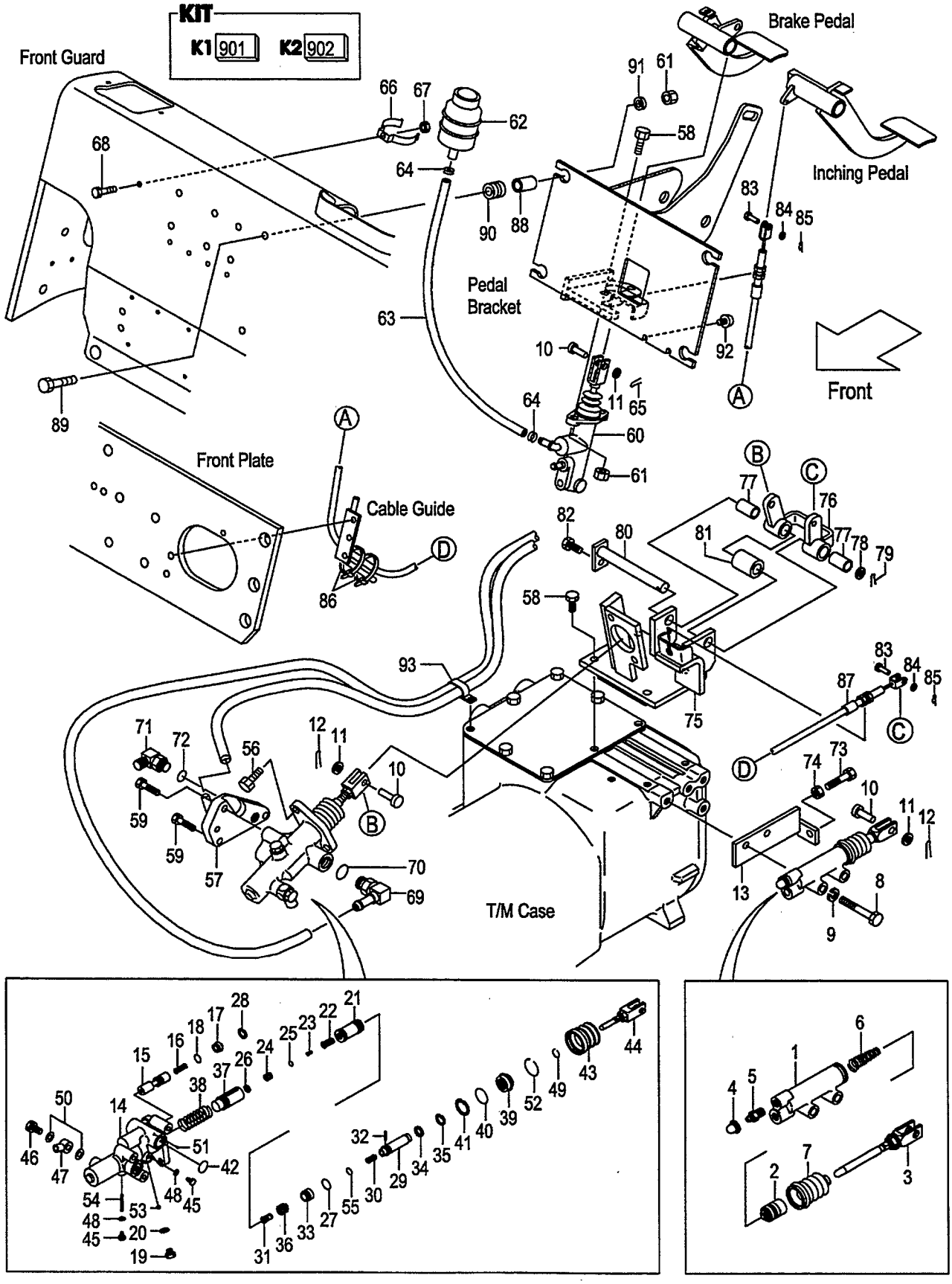

A:FD30C7

Item No	Part No.	Mark	Description	Req'd	Remarks : Serial No.
91	22252-32251		WASHER ﾜｯｼｬ	4	[PC]
92	23456-42181		STOPPER ｽﾄｯﾊﾟ	1	[PC]
93	214A2-42331		CLIP ｸﾘｯﾌﾟ	1	[PC]

FIG.114 FOOT PEDAL CYLINDER (TOR-CON)

(F60354B0) フットペダルシリンダ

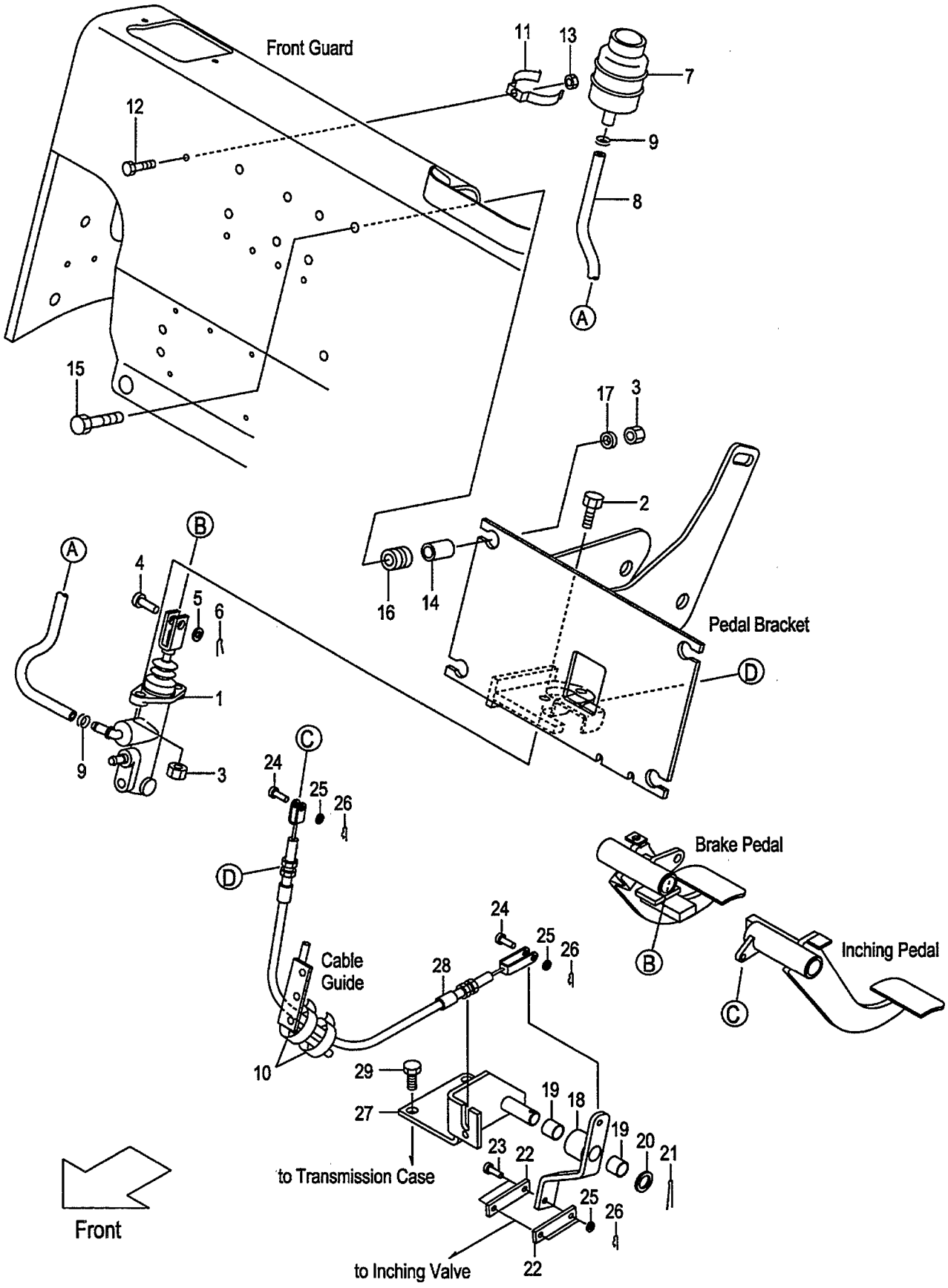

A:FD30T7

Item No	Part No.	Mark	Description		Req'd	Remarks : Serial No.
1	239A5-40102		CYL,BRAKE-MASTER	ｼﾘﾝﾀﾞ	1	SEE FIG.121
2	01184-10030		BOLT	ﾎﾞﾙﾄ	2	
3	01400-00010		NUT	ﾅｯﾄ	6	
4	02262-10030		PIN,CLEVIS	ﾋﾟﾝ	1	
5	02000-00010		WASHER	ﾜｯｼｬ	1	
6	02200-32025		PIN,COTTER	ﾋﾟﾝ	1	
7	23775-42101		TANK,RESERVE	ﾀﾝｸ	1	
8	22655-42591		HOSE	ﾎｰｽ	1	
9	25595-42491		CLIP,HOSE	ｸﾘｯﾌﾟ	2	
10	04913-11200		BAND	ﾊﾞﾝﾄﾞ	2	
11	224G5-42061		CLIP,RESERVE-TANK	ｸﾘｯﾌﾟ	1	
12	239A5-42381		BOLT	ﾎﾞﾙﾄ	1	
13	01400-00006		NUT	ﾅｯﾄ	1	
14	216G7-32011		COLLAR	ｶﾗｰ	4	
15	216G6-43241		BOLT	ﾎﾞﾙﾄ	4	
16	238F5-42601		RUBBER,MOUNT	ﾗﾊﾞｰ	4	
17	22252-32251		WASHER	ﾜｯｼｬ	4	
A1	239G5-40101		LINK-ASSY	ﾘﾝｸｱｯｾﾝ	1	INC.18,19
18	NO PART NO.	#	LINK	ﾘﾝｸ	1	
19	23647-40121		BUSHING	ﾌﾞｯｼﾝｸﾞ	2	
20	02000-00016		WASHER	ﾜｯｼｬ	1	
21	02200-04025		PIN,COTTER	ﾋﾟﾝ	1	
22	218H5-42521		PLATE	ﾌﾟﾚｰﾄ	2	
23	02262-06025		PIN,CLEVIS	ﾋﾟﾝ	2	
24	02262-06020		PIN,CLEVIS	ﾋﾟﾝ	2	
25	02000-00006		WASHER	ﾜｯｼｬ	4	
26	216G5-22081		PIN,SNAP	ﾋﾟﾝ	4	
27	239G5-40502		BRACKET,LINK	ﾌﾞﾗｹｯﾄ	1	
28	239B5-42501		CABLE,INCHING	ｹｰﾌﾞﾙ	1	
29	01184-10020		BOLT	ﾎﾞﾙﾄ	2	

FIG.115 FOOT PEDAL CYLINDER (OIL CLUTCH)

(F60354F0) フットペダルシリンダ

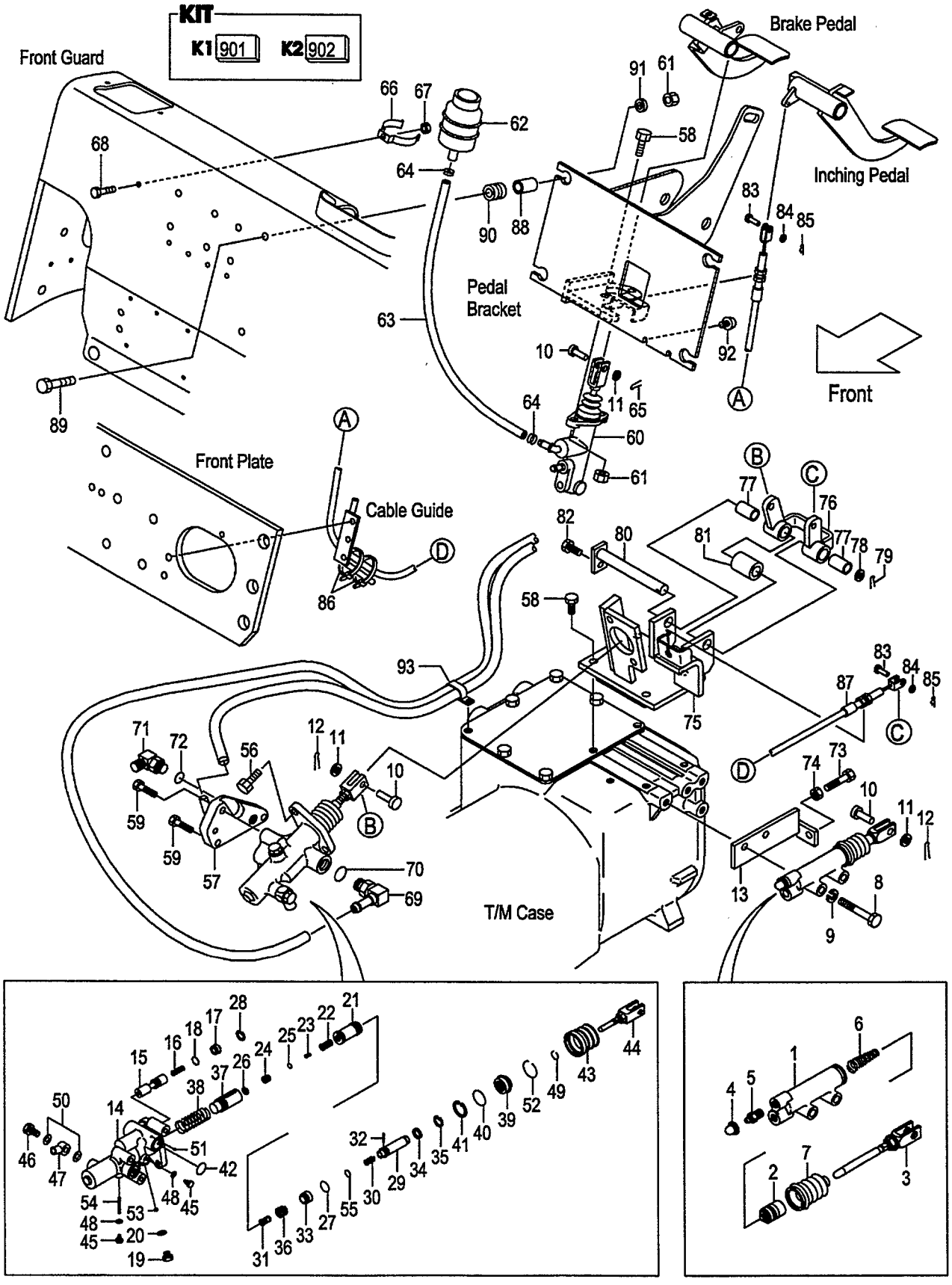

A:FD30W7

Item No	Part No.	Mark	Description		Req'd	Remarks : Serial No.
A1	522A2-10401		CYL-ASSY,CLUTCH-RELEASE	ｼﾘﾝﾀﾞｱｯｾﾝ	1	INC.1-7
901	522A2-11601	K1	KIT,OVERHAUL	ｵｰﾊﾞｰﾎｰﾙｷｯﾄ	1	INC.2,4,6,7
1	NO PART NO.	#	BODY,CYL	ﾎﾞﾃﾞｨ	1	
2	522A2-18541	*	PISTON,RELEASE-CYL	ﾋﾟｽﾄﾝ	1	
3	522A2-18551		ROD,PUSH	ﾛｯﾄﾞ	1	
4	522A2-18561	*	CAP,BLEEDER-PLUG	ｷｬｯﾌﾟ	1	
5	522A2-18571		PLUG,BLEEDER	ﾌﾟﾗｸﾞ	1	
6	522A2-18581	*	SPRING,CONICAL	ｽﾌﾟﾘﾝｸﾞ	1	
7	522A2-18591	*	BOOT	ﾌﾞｰﾂ	1	
8	01103-10060		BOLT	ﾎﾞﾙﾄ	2	
9	02010-00010		WASHER	ﾜｯｼｬ	2	
10	02262-10030		PIN,CLEVIS	ﾋﾟﾝ	3	
11	02000-00010		WASHER	ﾜｯｼｬ	3	
12	02200-32020		PIN,COTTER	ﾋﾟﾝ	2	
13	214L5-32101		BRACKET,RELEASE-CYL	ﾌﾞﾗｹｯﾄ	1	
A2	224W5-30202		BOOSTER-ASSY,CLUTCH	ｸﾗｯﾁﾌﾞｰｽﾀｱｯｾﾝ	1	INC.14-55
902	224W5-32501	K2	KIT,OVERHAUL	ｵｰﾊﾞｰﾎｰﾙｷｯﾄ	1	INC.18,20,21,25-28,32,35, 37,39-43,48-55
14	NO PART NO.	#	BODY,BOOSTER	ﾎﾞﾃﾞｨ	1	
15	224W5-32511		SPOOL,FLOW-DIVIDER	ｽﾌﾟｰﾙ	1	
16	522A2-18011		SPRING,FLOW-DIVIDER	ｽﾌﾟﾘﾝｸﾞ	1	
17	522A2-18021		PLUG	ﾌﾟﾗｸﾞ	1	
18	522A2-18031	*	O-RING	Oﾘﾝｸﾞ	1	
19	522A2-18041		PLUG	ﾌﾟﾗｸﾞ	1	
20	522A2-18051	*	GASKET	ｶﾞｽｹｯﾄ	1	
21	224W5-32401	*	PISTON,POWER	ﾋﾟｽﾄﾝ	1	
22	522A2-18071		VALVE,CONTROL	ﾊﾞﾙﾌﾞ	1	
23	522A2-18081		SPRING,CONTROL-VALVE	ｽﾌﾟﾘﾝｸﾞ	1	
24	522A2-18091		PLUG,PISTON	ﾌﾟﾗｸﾞ	1	
25	522A2-18101	*	O-RING	Oﾘﾝｸﾞ	1	
26	522A2-18111	*	RING,SNAP	ｽﾅｯﾌﾟﾘﾝｸﾞ	1	
27	522A2-18121	*	O-RING	Oﾘﾝｸﾞ	1	
28	522A2-18131	*	RING,SNAP	ｽﾅｯﾌﾟﾘﾝｸﾞ	1	
29	224W5-42401		PISTON,REACTION	ﾋﾟｽﾄﾝ	1	
30	224W5-32421		SPRING,RELIEF-VALVE	ｽﾌﾟﾘﾝｸﾞ	1	
31	522A2-18161		SEAT,CONTROL-VALVE	ｼｰﾄ	1	
32	522A2-18171	*	PIN	ﾋﾟﾝ	1	
33	224W5-42431		PISTON,REACTION	ﾋﾟｽﾄﾝ	1	
34	522A2-18201		WASHER	ﾜｯｼｬ	1	
35	522A2-18211	*	RING,SNAP	ｽﾅｯﾌﾟﾘﾝｸﾞ	1	
36	522A2-18221		SPRING,RETURN,VALVE	ｽﾌﾟﾘﾝｸﾞ	1	
37	224W5-32441	*	PISTON,MASTER-CYL	ﾋﾟｽﾄﾝ	1	
38	224W5-32551		SPRING,RETURN,PISTON	ｽﾌﾟﾘﾝｸﾞ	1	
39	224W5-32521	*	GUIDE,REACTION	ｶﾞｲﾄﾞ	1	
40	224W5-32451	*	O-RING	Oﾘﾝｸﾞ	1	
41	224W5-32461	*	RING,SNAP	ｽﾅｯﾌﾟﾘﾝｸﾞ	1	
42	522A2-18281	*	O-RING	Oﾘﾝｸﾞ	2	
43	224W5-32471	*	BOOT	ﾌﾞｰﾂ	1	
44	522A2-18301		ROD,PUSH	ﾛｯﾄﾞ	1	
45	522A2-18311		BOLT	ﾎﾞﾙﾄ	2	

FIG.115 FOOT PEDAL CYLINDER (OIL CLUTCH)

(F60354F0) フットペダルシリンダ

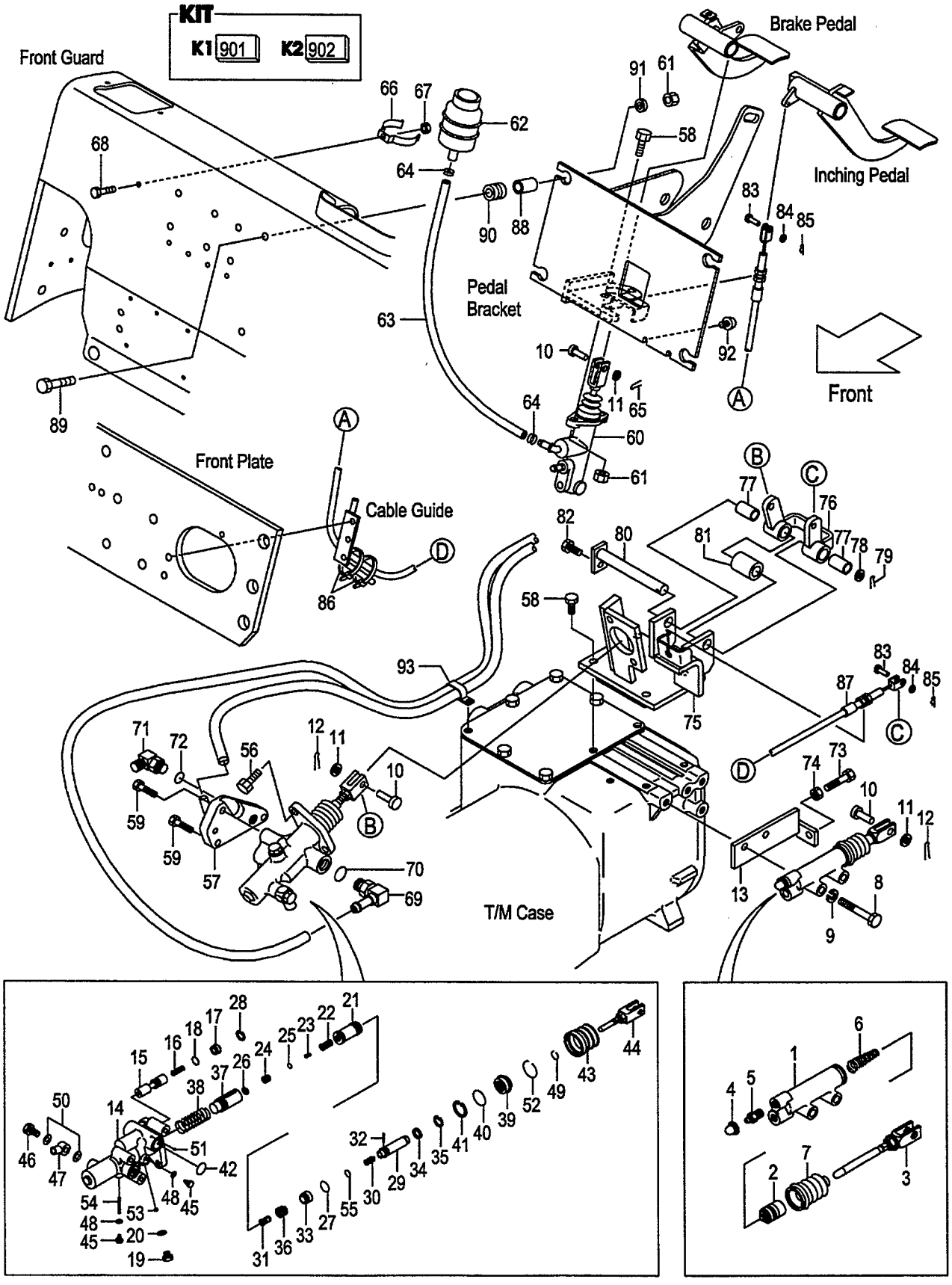

A:FD30W7

Item No	Part No.	Mark	Description		Req'd	Remarks : Serial No.
46	522A2-18341		BOLT,UNION	ﾎﾞﾙﾄ	1	
47	522A2-18352		UNION	ﾕﾆｵﾝ	1	
48	522A2-18321	*	GASKET	ｶﾞｽｹｯﾄ	2	
49	522A2-18331	*	RING,SNAP	ｽﾅｯﾌﾟﾘﾝｸﾞ	1	
50	522A2-18361	*	GASKET	ｶﾞｽｹｯﾄ	2	
51	522A2-18371	*	BALL	ﾎﾞｰﾙ	1	
52	224W5-32481	*	RING,SNAP	ｽﾅｯﾌﾟﾘﾝｸﾞ	1	
53	522A2-18391	*	BALL	ﾎﾞｰﾙ	1	
54	224W5-32491	*	PIN	ﾋﾟﾝ	1	
55	55952-18021	*	O-RING	Oﾘﾝｸﾞ	1	
56	01184-10025		BOLT	ﾎﾞﾙﾄ	2	
57	239H5-42461		ADAPTER	ｱﾀﾞﾌﾟﾀ	1	
58	01184-10030		BOLT	ﾎﾞﾙﾄ	6	
59	01184-10055		BOLT	ﾎﾞﾙﾄ	3	
60	239A5-40102		CYL,BRAKE-MASTER	ｼﾘﾝﾀﾞ	1	SEE FIG.121
61	01400-00010		NUT	ﾅｯﾄ	6	
62	23775-42101		TANK,RESERVE	ﾀﾝｸ	1	
63	22655-42591		HOSE,RESERVE	ﾎｰｽ	1	
64	25595-42491		CLIP,HOSE	ｸﾘｯﾌﾟ	2	
65	02200-32025		PIN,COTTER	ﾋﾟﾝ	1	
66	224G5-42061		CLIP,RESERVE-TANK	ｸﾘｯﾌﾟ	1	
67	01400-00006		NUT	ﾅｯﾄ	1	
68	239A5-42381		BOLT	ﾎﾞﾙﾄ	1	
A3	224W7-60311		FITTING-ASSY,HOSE	ﾎｰｽﾌｨｯﾃｨﾝｸﾞｱｯｾﾝ	1	INC.69,70
69	NO PART NO.	#	FITTING,HOSE	ﾌｨｯﾃｨﾝｸﾞ	1	
70	89140-00006		O-RING	Oﾘﾝｸﾞ	1	
A4	04150-20202		ELBOW-ASSY	ｴﾙﾎﾞｱｯｾﾝ	1	INC.71,72
71	NO PART NO.	#	ELBOW	ｴﾙﾎﾞ	1	
72	03320-00110		O-RING	Oﾘﾝｸﾞ	1	
73	01100-10030		BOLT	ﾎﾞﾙﾄ	1	
74	01402-00010		NUT	ﾅｯﾄ	1	
A5	239H5-40191		BRACKET-ASSY,BOOSTER	ﾌﾞﾗｹｯﾄｱｯｾﾝ	1	INC.75-82
75	239H5-40201		BRACKET,BOOSTER	ﾌﾞﾗｹｯﾄ	1	
A6	239H5-40211		LINK-ASSY	ﾘﾝｸｱｯｾﾝ	1	INC.76,77
76	239H5-42301		LINK	ﾘﾝｸ	1	
77	256C7-42281		BUSHING	ﾌﾞｯｼﾝｸﾞ	2	
78	02000-00016		WASHER	ﾜｯｼｬ	1	
79	02200-04025		PIN,COTTER	ﾋﾟﾝ	1	
80	239H5-40311		SHAFT	ｼｬﾌﾄ	1	
81	239H5-42371		SPACER	ｽﾍﾟｰｻ	1	
82	01183-08016		BOLT	ﾎﾞﾙﾄ	1	
83	02262-08020		PIN,CLEVIS	ﾋﾟﾝ	2	
84	02000-00008		WASHER	ﾜｯｼｬ	2	
85	02200-02016		PIN,COTTER	ﾋﾟﾝ	2	
86	04913-11200		BAND	ﾊﾞﾝﾄﾞ	2	
87	239H5-42451		CABLE,INCHING	ｹｰﾌﾞﾙ	1	
88	216G7-32011		COLLAR	ｶﾗｰ	4	
89	216G6-43241		BOLT	ﾎﾞﾙﾄ	4	
90	238F5-42601		RUBBER,MOUNT	ﾗﾊﾞｰ	4	
91	22252-32251		WASHER	ﾜｯｼｬ	4	

FIG.115 FOOT PEDAL CYLINDER (OIL CLUTCH)

(F60354F0) フットペダルシリンダ

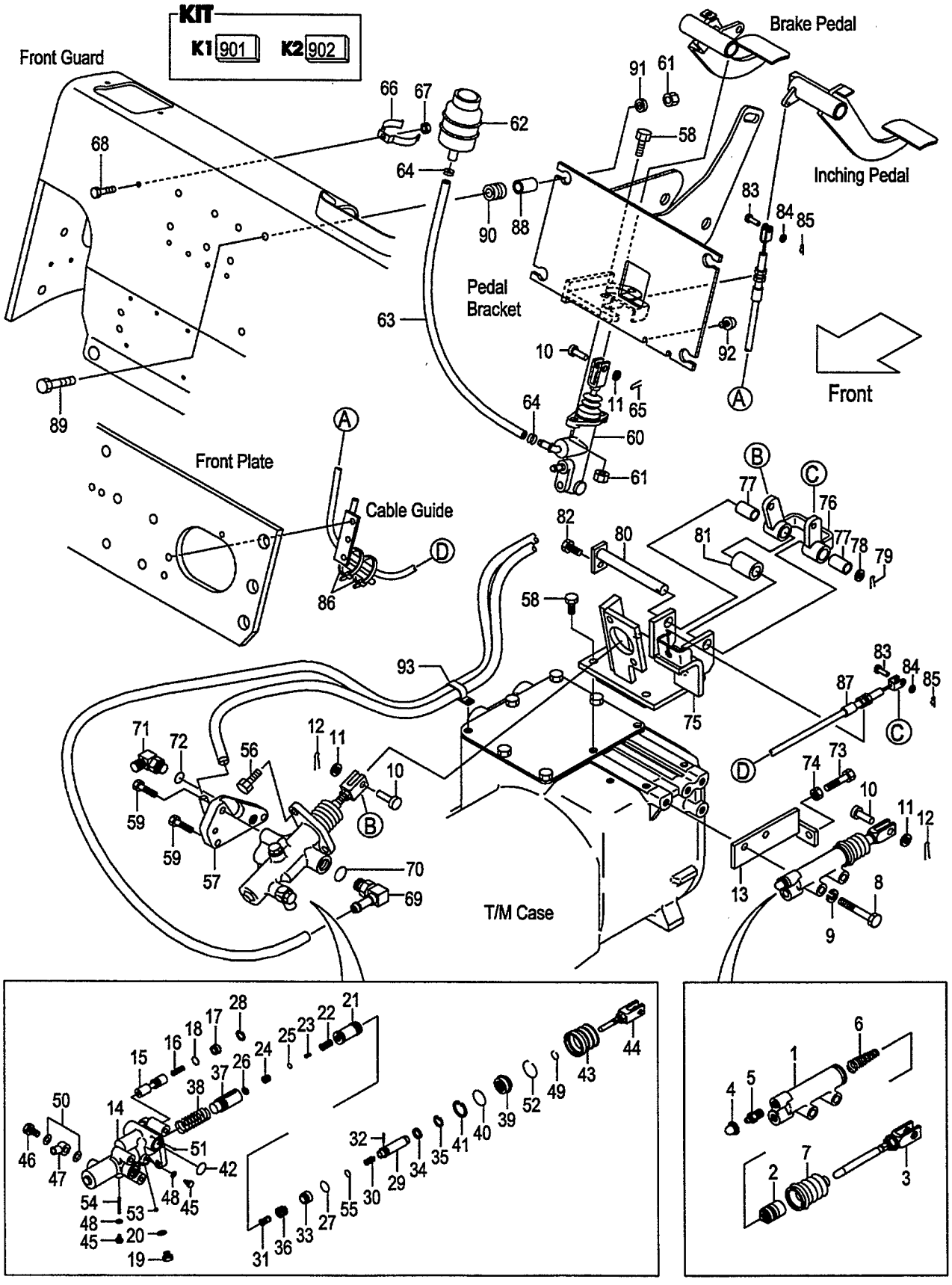

A:FD30W7

Item No	Part No.	Mark	Description	Req'd	Remarks : Serial No.
92	23456-42181		STOPPER ｽﾄｯﾊﾟ	1	
93	214A2-42331		CLIP ｸﾘｯﾌﾟ	1	

FIG.116 BRAKE PIPE (CLUTCH)

(F6035430) ﾌﾞﾚｰｷﾊﾟｲﾌﾟ

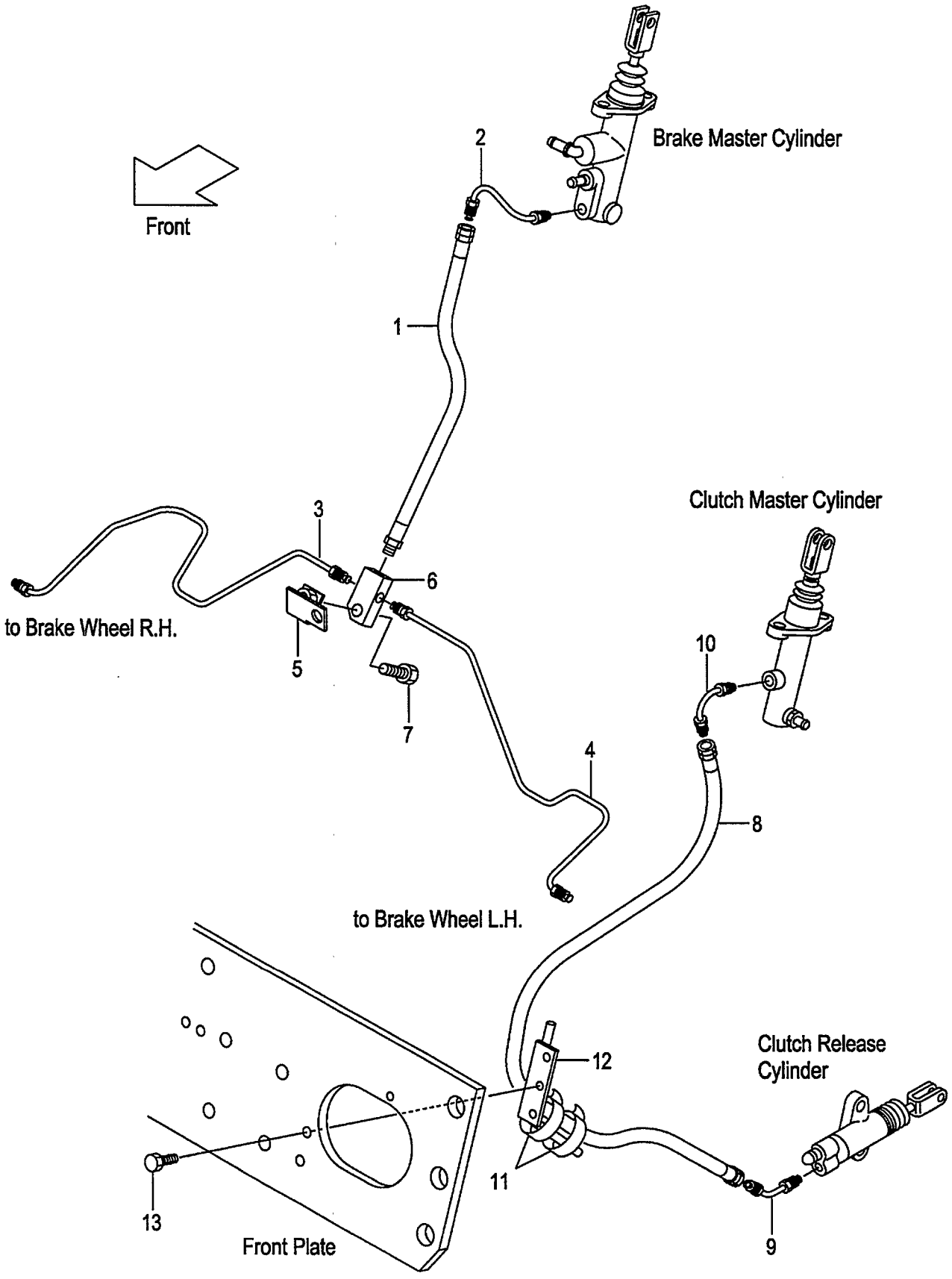

FIG.116
(F6035430)

A:FD30C7

Item No	Part No.	Mark	Description		Req'd	Remarks : Serial No.
1	239A5-42071		HOSE,BRAKE	ﾎｰｽ	1	
2	238F5-42421		PIPE,BRAKE-MASTER	ﾊﾟｲﾌﾟ	1	
3	239F5-42601		PIPE,BRAKE,RH	ﾊﾟｲﾌﾟ	1	
4	239F5-42621		PIPE,BRAKE,LH	ﾊﾟｲﾌﾟ	1	
5	239B5-42421		BRACKET,THREE-WAY	ﾌﾞﾗｹｯﾄ	1	
6	23455-42021		THREE-WAY	ｽﾘｰｳｴｲ	1	
7	01184-10030		BOLT	ﾎﾞﾙﾄ	1	
8	239A5-42451		HOSE,CLUTCH	ﾎｰｽ	1	
9	239A5-42461		PIPE,CLUTCH-RELEASE	ﾊﾟｲﾌﾟ	1	
10	239A5-42471		PIPE,CLUTCH-MASTER	ﾊﾟｲﾌﾟ	1	
11	04913-11200		BAND	ﾊﾞﾝﾄﾞ	2	
12	239A5-42351		GUIDE,CABLE	ｶﾞｲﾄﾞ	1	(WITHOUT EXC,EXE,EXK,EXN,OBT)
13	216H3-92291		BOLT	ﾎﾞﾙﾄ	2	(WITHOUT EXC,EXE,EXK,EXN,OBT)

FIG.117 BRAKE PIPE (CLUTCH):[PC]

(F6035470) ﾌﾞﾚｰｷﾊﾟｲﾌﾟ

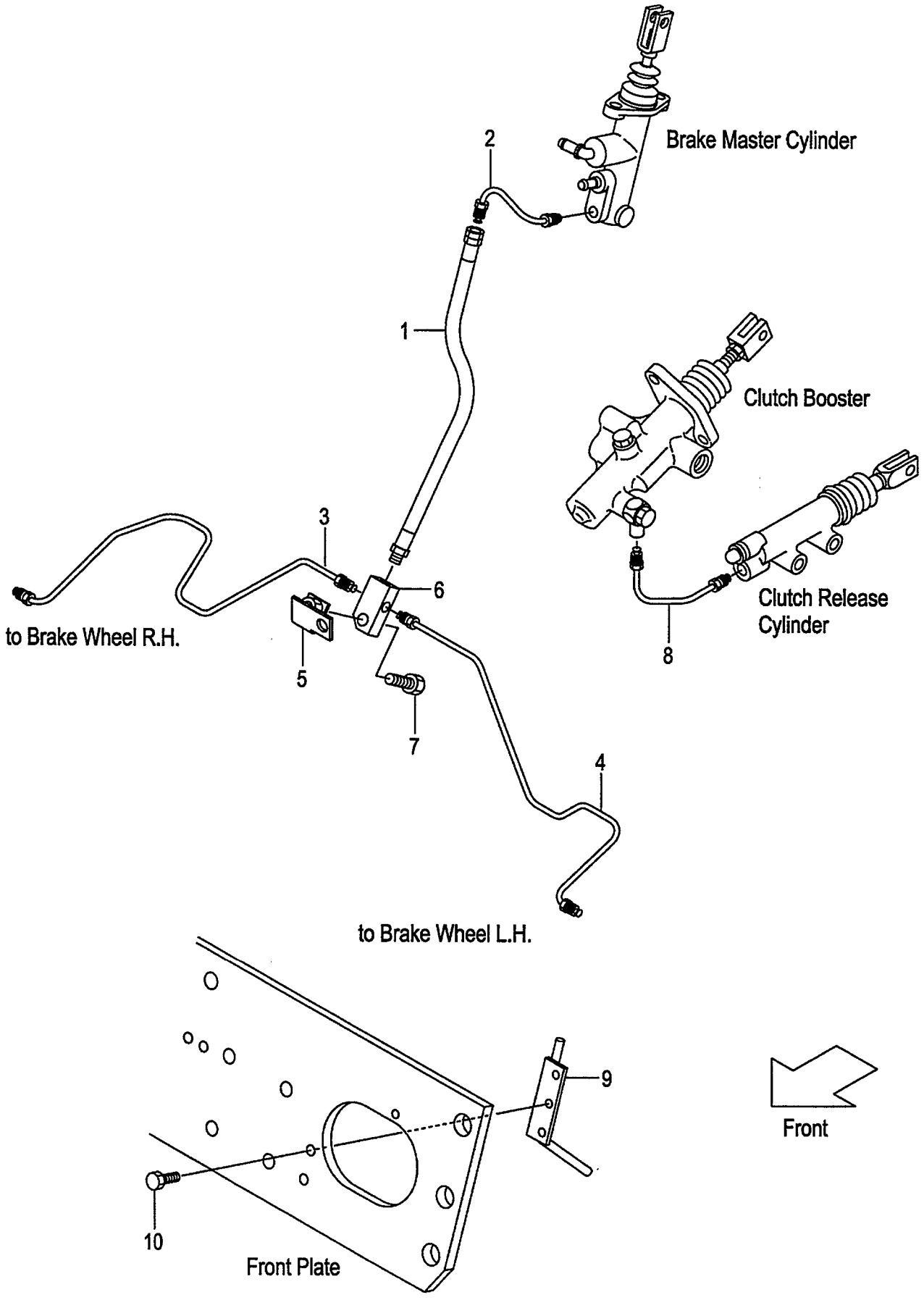

FIG.117
(F6035470)

A:FD30C7

Item No	Part No.	Mark	Description		Req'd	Remarks : Serial No.
1	239A5-42071		HOSE,BRAKE	ﾎｰｽ	1	[PC]
2	238F5-42421		PIPE,BRAKE-MASTER	ﾊﾟｲﾌﾟ	1	[PC]
3	239B5-42601		PIPE,BRAKE,RH	ﾊﾟｲﾌﾟ	1	[PC]
4	239B5-42621		PIPE,BRAKE,LH	ﾊﾟｲﾌﾟ	1	[PC]
5	239B5-42421		BRACKET,THREE-WAY	ﾌﾞﾗｹｯﾄ	1	[PC]
6	23455-42021		THREE-WAY	ｽﾘｰｳｴｲ	1	[PC]
7	01184-10030		BOLT	ﾎﾞﾙﾄ	1	[PC]
8	239H5-42381		PIPE,RELEASE-CYL	ﾊﾟｲﾌﾟ	1	[PC]
9	239A5-42351		GUIDE,CABLE	ｶﾞｲﾄﾞ	1	[PC]
10	216H3-92291		BOLT	ﾎﾞﾙﾄ	2	[PC]

FIG.118 BRAKE PIPE (TOR-CON)

(F60354D0) ﾌﾞﾚｰｷﾊﾟｲﾌﾟ

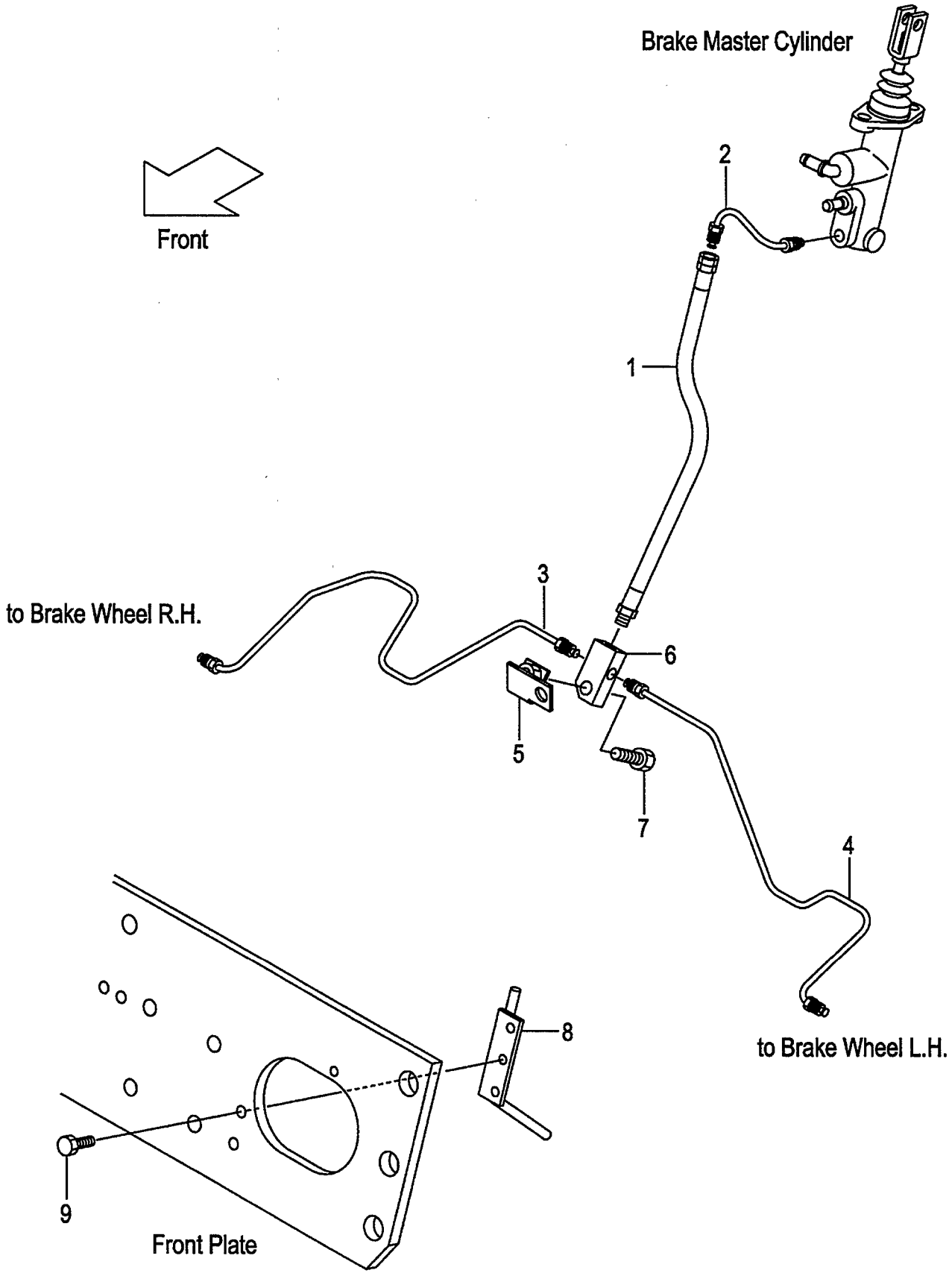

FIG.118
(F60354D0)

A:FD30T7

Item No	Part No.	Mark	Description		Req'd	Remarks : Serial No.
1	239A5-42071		HOSE,BRAKE	ﾎｰｽ	1	
2	238F5-42421		PIPE,BRAKE-MASTER	ﾊﾟｲﾌﾟ	1	
3	239B5-42601		PIPE,BRAKE,RH	ﾊﾟｲﾌﾟ	1	
4	239B5-42621		PIPE,BRAKE,LH	ﾊﾟｲﾌﾟ	1	
5	239B5-42421		BRACKET,THREE-WAY	ﾌﾞﾗｹｯﾄ	1	
6	23455-42021		THREE-WAY	ｽﾘｰｳｴｲ	1	
7	01184-10030		BOLT	ﾎﾞﾙﾄ	1	
8	239A5-42351		GUIDE,CABLE	ｶﾞｲﾄﾞ	1	(WITHOUT EXC,EXE,EXK,EXN,OBT)
9	216H3-92291		BOLT	ﾎﾞﾙﾄ	2	(WITHOUT EXC,EXE,EXK,EXN,OBT)

FIG.119 BRAKE PIPE (OIL CLUTCH)

(F60354G0) ﾌﾞﾚｰｷﾊﾟｲﾌﾟ

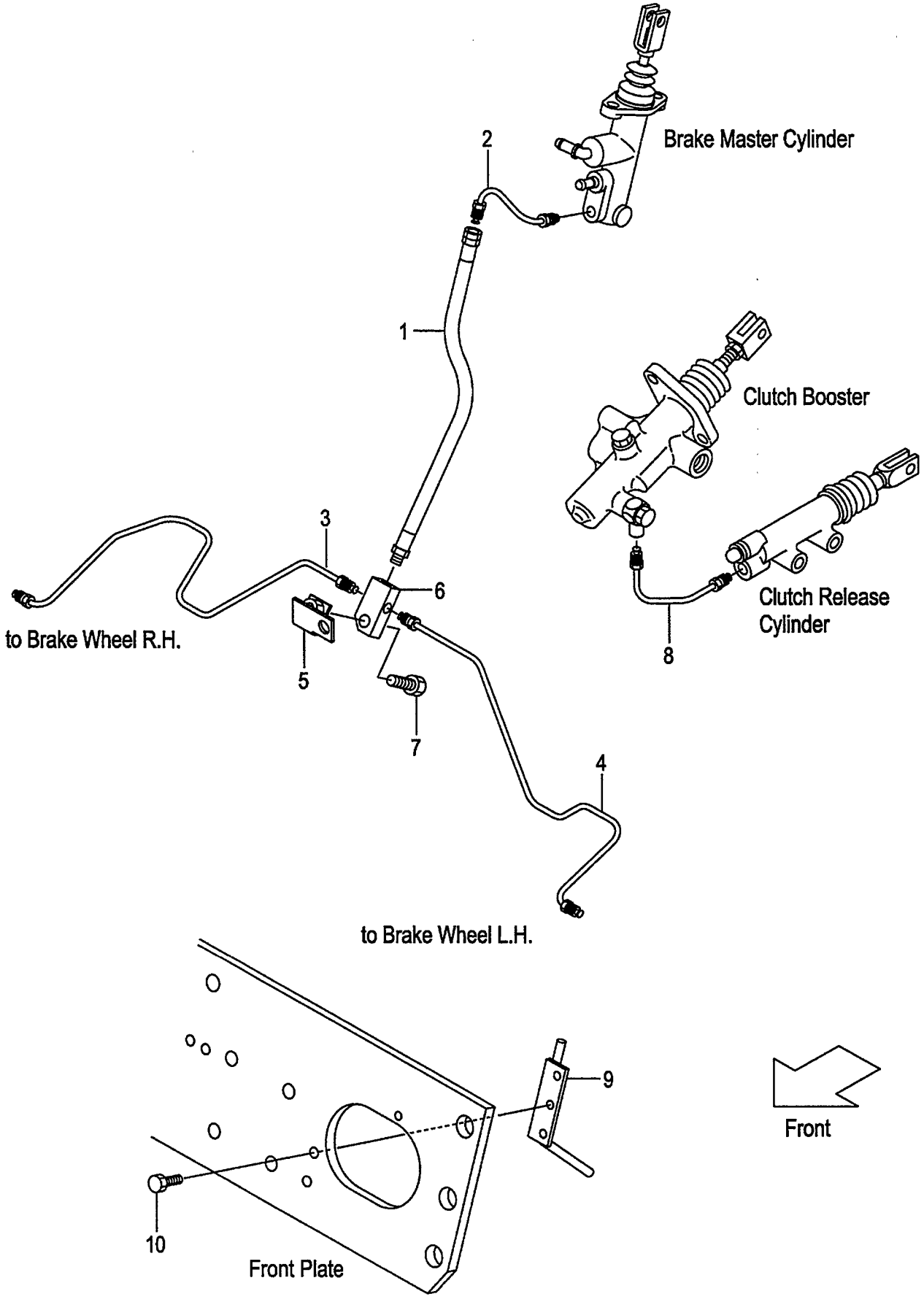

A:FD30W7

Item No	Part No.	Mark	Description		Req'd	Remarks : Serial No.
1	239A5-42071		HOSE,BRAKE	ﾎｰｽ	1	
2	238F5-42421		PIPE,BRAKE-MASTER	ﾊﾟｲﾌﾟ	1	
3	239B5-42601		PIPE,BRAKE,RH	ﾊﾟｲﾌﾟ	1	
4	239B5-42621		PIPE,BRAKE,LH	ﾊﾟｲﾌﾟ	1	
5	239B5-42421		BRACKET,THREE-WAY	ﾌﾞﾗｹｯﾄ	1	
6	23455-42021		THREE-WAY	ｽﾘｰｳｴｲ	1	
7	01184-10030		BOLT	ﾎﾞﾙﾄ	1	
8	239H5-42381		PIPE,RELEASE-CYL	ﾊﾟｲﾌﾟ	1	
9	239A5-42351		GUIDE,CABLE	ｶﾞｲﾄﾞ	1	
10	216H3-92291		BOLT	ﾎﾞﾙﾄ	2	

FIG.120 FOOT PEDAL COVER

(F6035440) ﾌｯﾄﾍﾟﾀﾞﾙｶﾊﾞｰ

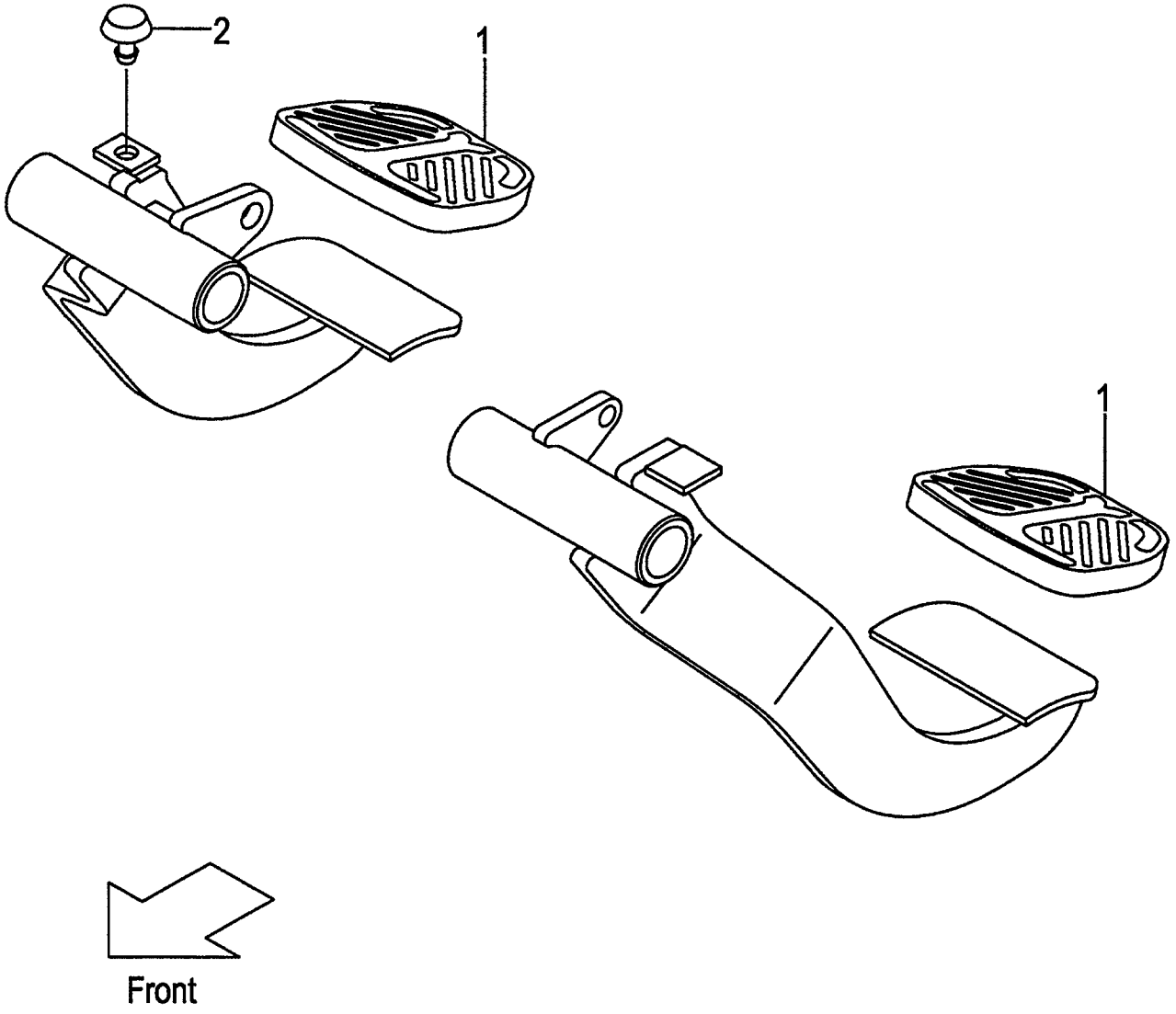

A:FD30C7
B:FD30T7
C:FD30W7

FIG.120
(F6035440)

Item No	Part No.	Mark	Description	Req'd	Remarks : Serial No.
1	239A5-42301		COVER,HEAD カバ゛ー	2	
2	23235-40091		RUBBER ラバ゛ー	1	

FIG.121 BRAKE MASTER CYLINDER

(F60354E0) ﾌﾞﾚｰｷﾏｽﾀｼﾘﾝﾀﾞ

KIT
K1 901

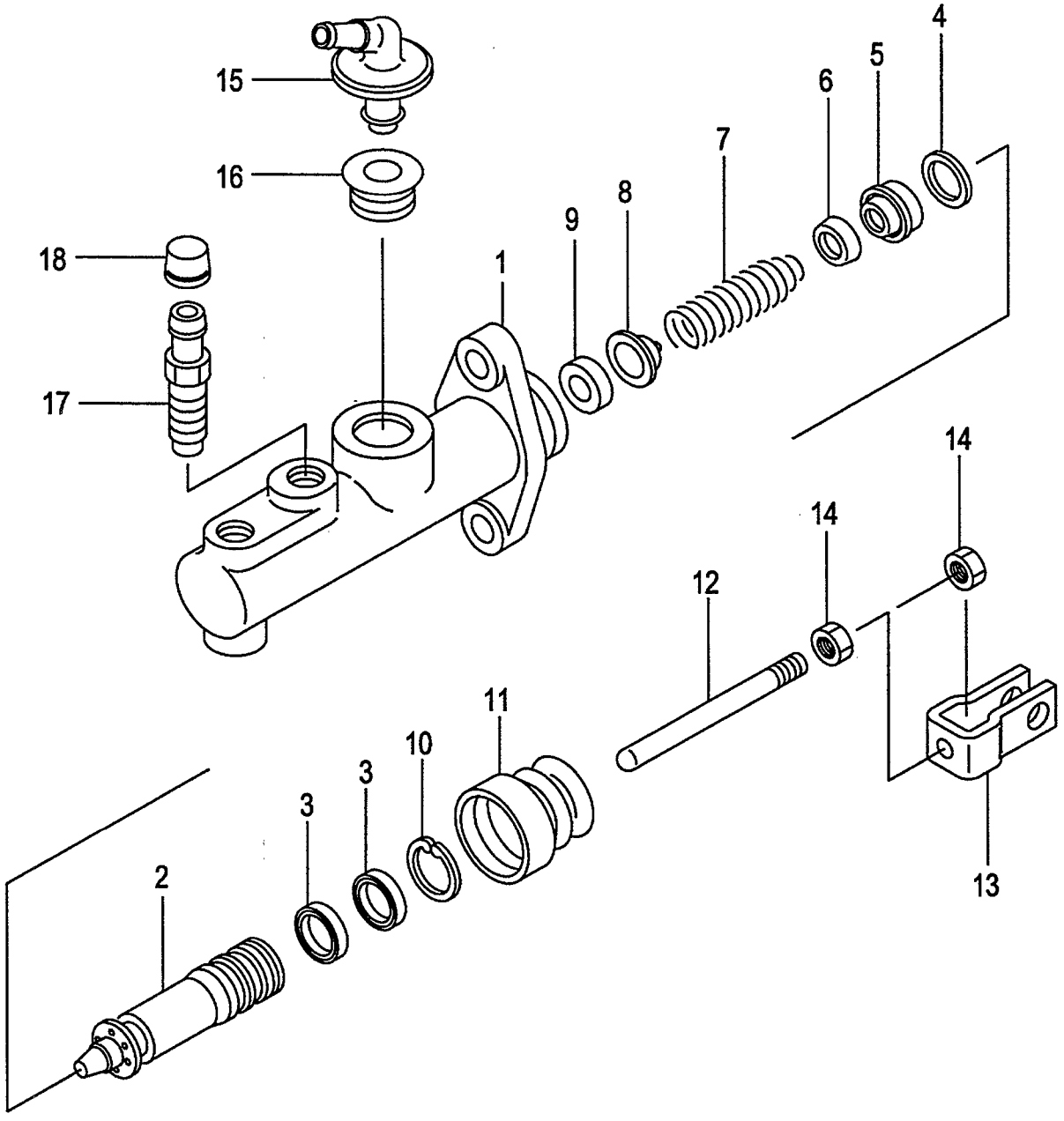

A:FD30C7
B:FD30T7
C:FD30W7

FIG.121
(F60354E0)

Item No	Part No.	Mark	Description		Req'd	Remarks : Serial No.
A1	239A5-40102		CYL-ASSY,BRAKE-MASTER	ｼﾘﾝﾀﾞｱｯｾﾝ	1	INC.1-18
901	239A5-40641	K1	KIT,REPAIR	ﾘﾍﾟｱｷｯﾄ	1	INC.2-7,10,11,18
1	NO PART NO.	#	BODY,CYL	ﾎﾞﾃﾞｨ	1	
2	239A5-42161	*	PISTON	ﾋﾟｽﾄﾝ	1	
3	239A5-42121	*	CAP,SECONDARY	ｷｬｯﾌﾟ	2	
4	239A5-42101	*	SPACER	ｽﾍﾟｰｻ	1	
5	239A5-42181	*	CAP,PRIMARY	ｷｬｯﾌﾟ	1	
6	239A5-42191	*	THIMBLE	ｼﾝﾌﾞﾙ	1	
7	239A5-42251	*	SPRING	ｽﾌﾟﾘﾝｸﾞ	1	
8	25595-42381		VALVE	ﾊﾞﾙﾌﾞ	1	
9	25595-42391		SEAT,VALVE	ｼｰﾄ	1	
10	25595-42311	*	RING,SNAP	ｽﾅｯﾌﾟﾘﾝｸﾞ	1	
11	239A5-42221	*	BOOT	ﾌﾞｰﾂ	1	
12	239A5-42271		ROD,PUSH	ﾛｯﾄﾞ	1	
13	239A5-42281		YOKE	ﾖｰｸ	1	
14	239A5-42291		NUT	ﾅｯﾄ	2	
15	25595-42411		UNION,FILLER	ﾕﾆｵﾝ	1	
16	25595-42421		BUSHING	ﾌﾞｯｼﾝｸﾞ	1	
17	239A5-42311		VALVE,BLEEDER	ﾊﾞﾙﾌﾞ	1	
18	239A5-42321	*	CAP,BLEEDER	ｷｬｯﾌﾟ	1	

FIG.122 BRAKE LEVER

(F6035510) ﾌﾞﾚｰｷﾚﾊﾞｰ

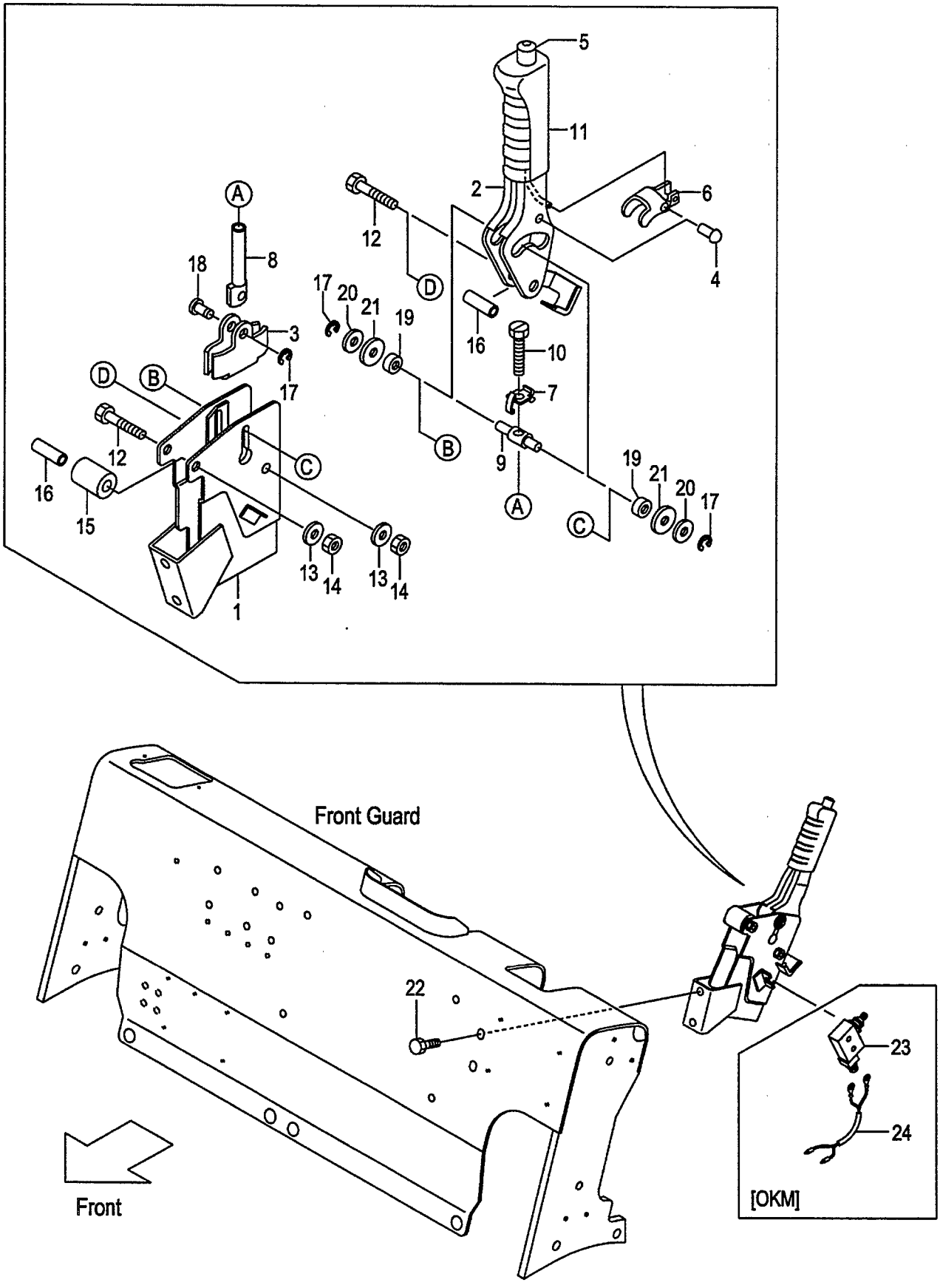

A:FD30C7 FD30T7 FD30W7

Item No	Part No.	Mark	Description		Req'd	Remarks : Serial No.
A1	239A5-50101		LEVER-ASSY,BRAKE	ﾌﾞﾚｰｷﾚﾊﾞｰｱｯｾﾝ	1	INC.1-21
1	NO PART NO.		BRACKET,BRAKE-LEVER	ﾌﾞﾗｹｯﾄ	1	
2	NO PART NO.		LEVER	ﾚﾊﾞｰ	1	
3	27415-52151		BRACKET	ﾌﾞﾗｹｯﾄ	1	
4	230C5-55021		PIN	ﾋﾟﾝ	1	
5	230C5-55031		ROD,RELEASE	ﾛｯﾄﾞ	1	
6	230C5-55041		PLATE,LOCK	ﾌﾟﾚｰﾄ	1	
7	230C5-55051		PLATE,TENSION	ﾌﾟﾚｰﾄ	1	
8	230C5-55061		ROD,ADJUST	ﾛｯﾄﾞ	1	
9	230C5-55071		PIN,TRUNION	ﾋﾟﾝ	1	
10	230C5-55081		BOLT	ﾎﾞﾙﾄ	1	
11	NO PART NO.		GRIP	ｸﾞﾘｯﾌﾟ	1	
12	01100-08050		BOLT	ﾎﾞﾙﾄ	2	
13	02010-00008		WASHER	ﾜｯｼｬ	2	
14	01400-00008		NUT	ﾅｯﾄ	2	
15	222A5-52111		RUBBER,STOPPER	ﾗﾊﾞｰ	1	
16	230C5-55101		COLLAR	ｶﾗｰ	2	
17	214A5-52131		E-RING	Eﾘﾝｸﾞ	3	
18	230C5-55111		PIN	ﾋﾟﾝ	1	
19	230C5-55121		ROLLER,CAM	ﾛｰﾗ	2	
20	214A5-52121		WASHER	ﾜｯｼｬ	2	
21	214A5-52241		WASHER	ﾜｯｼｬ	2	
22	216G6-43231		BOLT	ﾎﾞﾙﾄ	2	
23	27912-62441		SWITCH,MICRO	ｽｲｯﾁ	1	[OKM]
24	535H3-82261		WIRE-HARNESS,SWITCH	ﾜｲﾔﾊｰﾈｽ	1	[OKM]

FIG.123 FRAME

(F6036110) フレーム

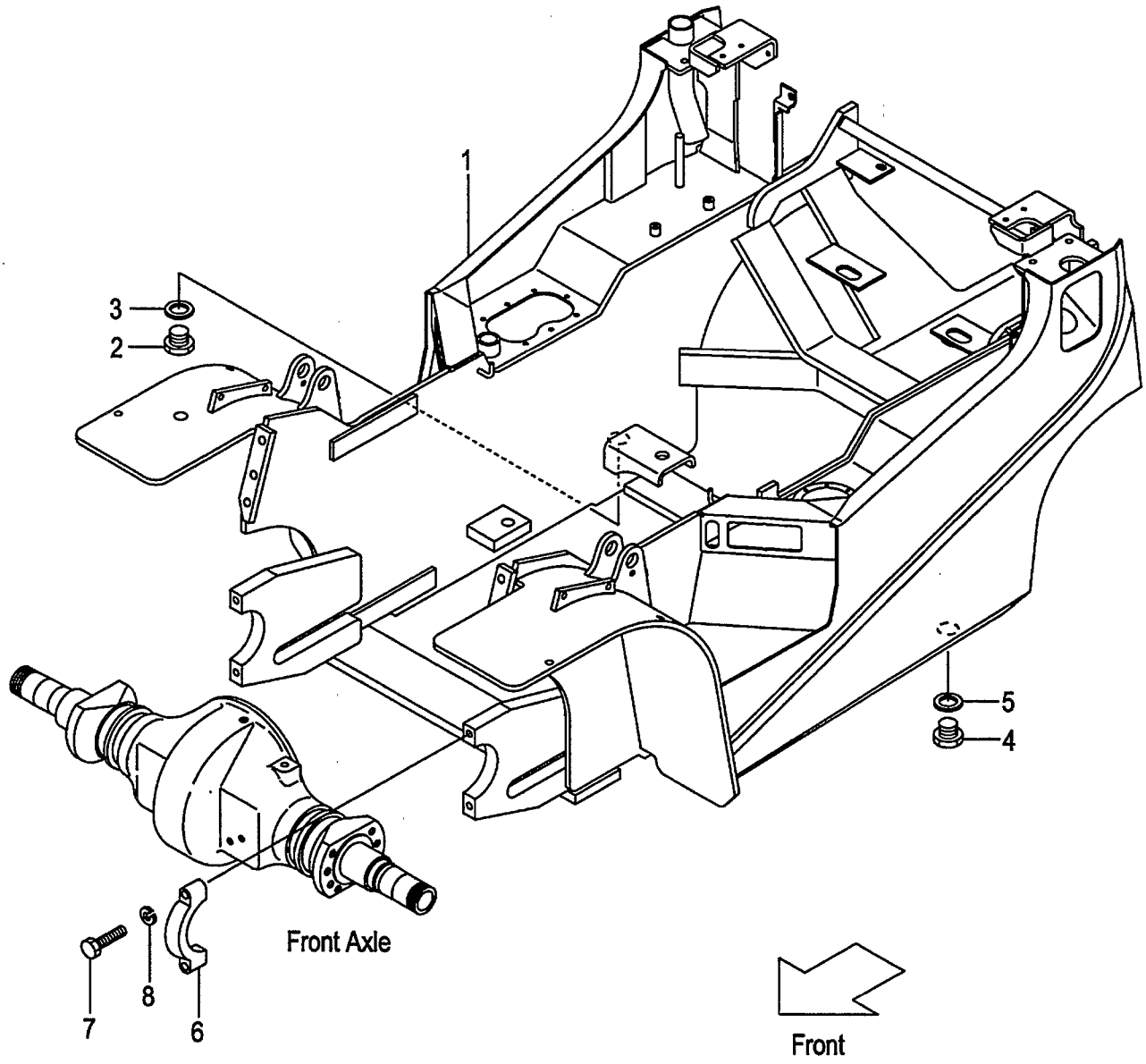

A:FD30C7 FD30T7
B:FD30W7

FIG.123
(F6036110)

Item No	Part No.	Mark	Description		Req'd	Remarks : Serial No.
1	NO PART NO.	#	FRAME	ﾌﾚｰﾑ	1	
2	21237-52051		PLUG,DRAIN	ﾌﾟﾗｸﾞ	1	
3	21237-52062		PACKING	ﾊﾟｯｷﾝｸﾞ	1	
4	21237-52051		PLUG,DRAIN	ﾌﾟﾗｸﾞ	1	
5	21237-52062		PACKING	ﾊﾟｯｷﾝｸﾞ	1	
6	277P8-32701		CAP,SUPPORT,F-AXLE	ｷｬｯﾌﾟ	2	
7	01100-16065		BOLT	ﾎﾞﾙﾄ	4	
8	02010-00016		WASHER	ﾜｯｼｬ	4	

FIG.124 OIL TANK (CLUTCH)(TOR-CON)

(F60361A0) オイルタンク

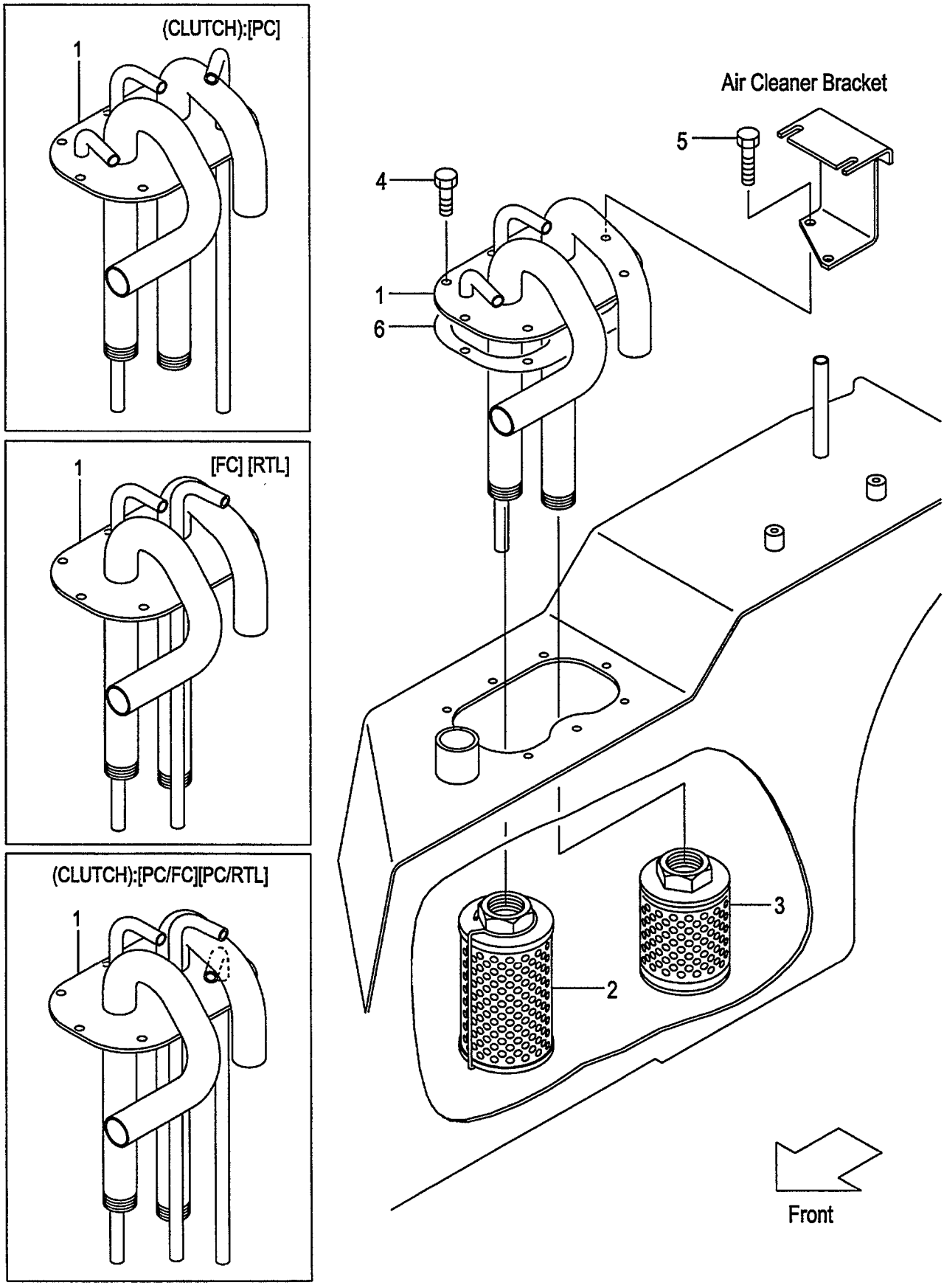

A:FD30C7
B:FD30T7

FIG.124
(F60361A0)

Item No	Part No.	Mark	Description		Req'd	Remarks : Serial No.
1	239A7-52001		PIPE,SUCTION	ﾊﾟｲﾌﾟ	1	
-	239H7-52001		PIPE,SUCTION	ﾊﾟｲﾌﾟ	1	A [PC]
-	539G3-72001		PIPE,SUCTION	ﾊﾟｲﾌﾟ	1	[FC][RTL]
-	538S3-72001		PIPE,SUCTION	ﾊﾟｲﾌﾟ	1	A [PC/FC][PC/RTL]
2	271A7-52301		FILTER,RETURN	ﾌｨﾙﾀ	1	
3	216G7-52051		FILTER,SUCTION	ﾌｨﾙﾀ	1	
4	229F2-22151		BOLT	ﾎﾞﾙﾄ	6	
5	229F2-22161		BOLT	ﾎﾞﾙﾄ	2	
6	216G2-22202		PACKING	ﾊﾟｯｷﾝｸﾞ	1	

FIG.125 OIL TANK (OIL CLUTCH)

(F60361B0) オイルタンク

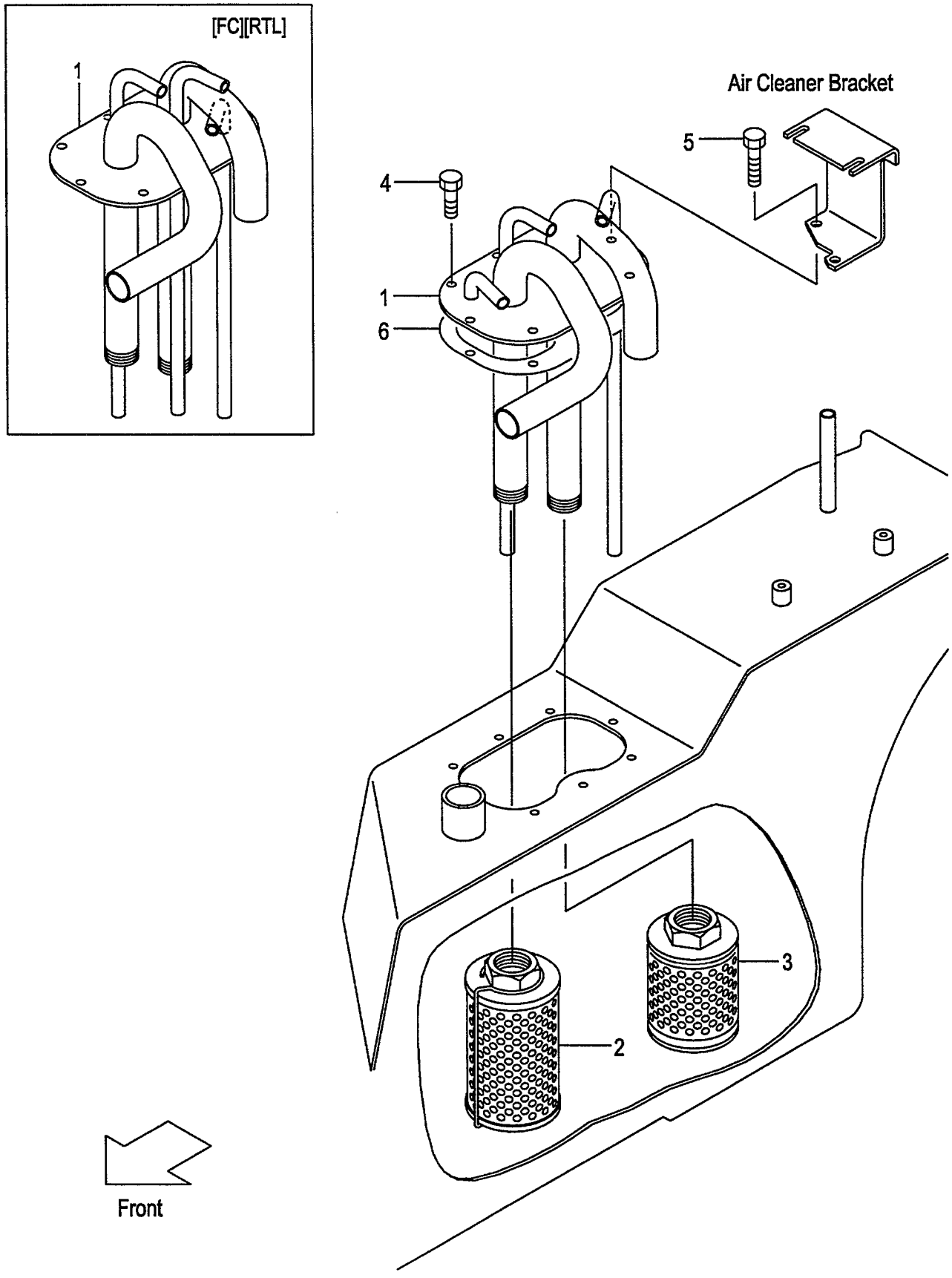

FIG.125
(F60361B0)

A:FD30W7

Item No	Part No.	Mark	Description		Req'd	Remarks : Serial No.
1	239H7-52001		PIPE,SUCTION	ﾊﾟｲﾌﾟ	1	
-	538S3-72001		PIPE,SUCTION	ﾊﾟｲﾌﾟ	1	[FC][RTL]
2	271A7-52301		FILTER,RETURN	ﾌｨﾙﾀ	1	
3	216G7-52051		FILTER,SUCTION	ﾌｨﾙﾀ	1	
4	229F2-22151		BOLT	ﾎﾞﾙﾄ	6	
5	229F2-22161		BOLT	ﾎﾞﾙﾄ	2	
6	216G2-22202		PACKING	ﾊﾟｯｷﾝｸﾞ	1	

FIG.126 OIL CAP & LEVEL
(F60361C0) オイルキャップ&レベル

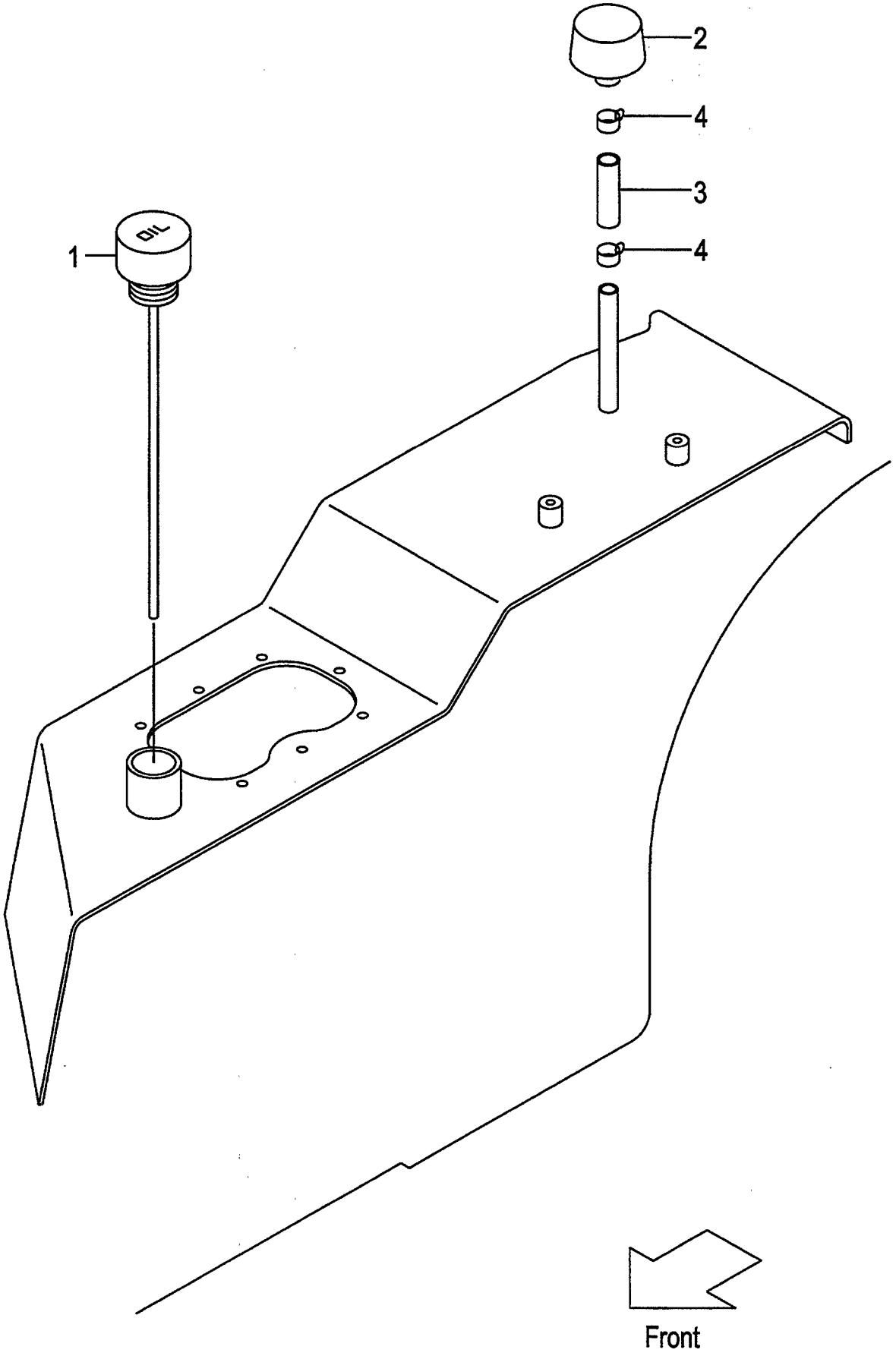

FIG.126
(F60361C0)

A:FD30C7 FD30T7 FD30W7

Item No	Part No.	Mark	Description		Req'd	Remarks : Serial No.
1	234A7-52101		CAP,OIL	ｷｬｯﾌﾟ	1	
2	216G7-52201		CAP,BREATHER	ｷｬｯﾌﾟ	1	
3	04710-04005		HOSE	ﾎｰｽ	1	
4	04914-00019		CLIP	ｸﾘｯﾌﾟ	2	

FIG.127 FUEL TANK
(F60361E0) フューエルタンク

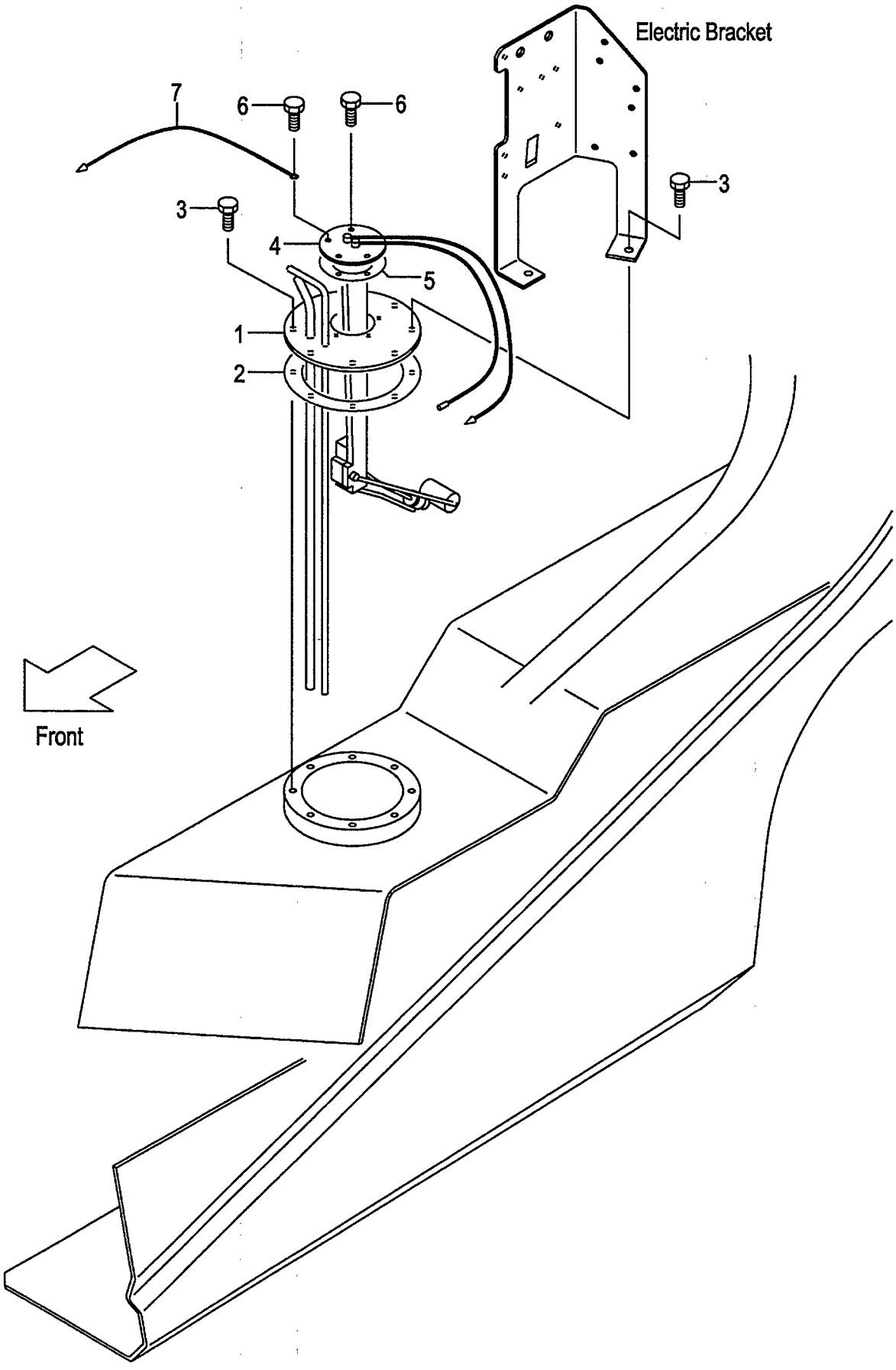

FIG.127
(F60361E0)

A:FD30C7 FD30T7 FD30W7

Item No	Part No.	Mark	Description		Req'd	Remarks : Serial No.
1	238G2-22101		PLATE,FUEL-TOP	ﾌﾟﾚｰﾄ	1	
2	272E7-52022		GASKET	ｶﾞｽｹｯﾄ	1	
3	01183-06016		BOLT	ﾎﾞﾙﾄ	8	
4	238G2-22021		UNIT,SENDING,FUEL	ﾕﾆｯﾄ	1	
-	238G2-22031		UNIT,SENDING,FUEL	ﾕﾆｯﾄ	1	[OKM]
5	229F2-22071		GASKET	ｶﾞｽｹｯﾄ	1	
6	229F2-22171		BOLT	ﾎﾞﾙﾄ	5	
7	25592-42121		WIRE	ﾜｲﾔ	1	

FIG.128 BALANCE WEIGHT

(F6036310) ﾊﾞﾗﾝｽｳｴｲﾄ

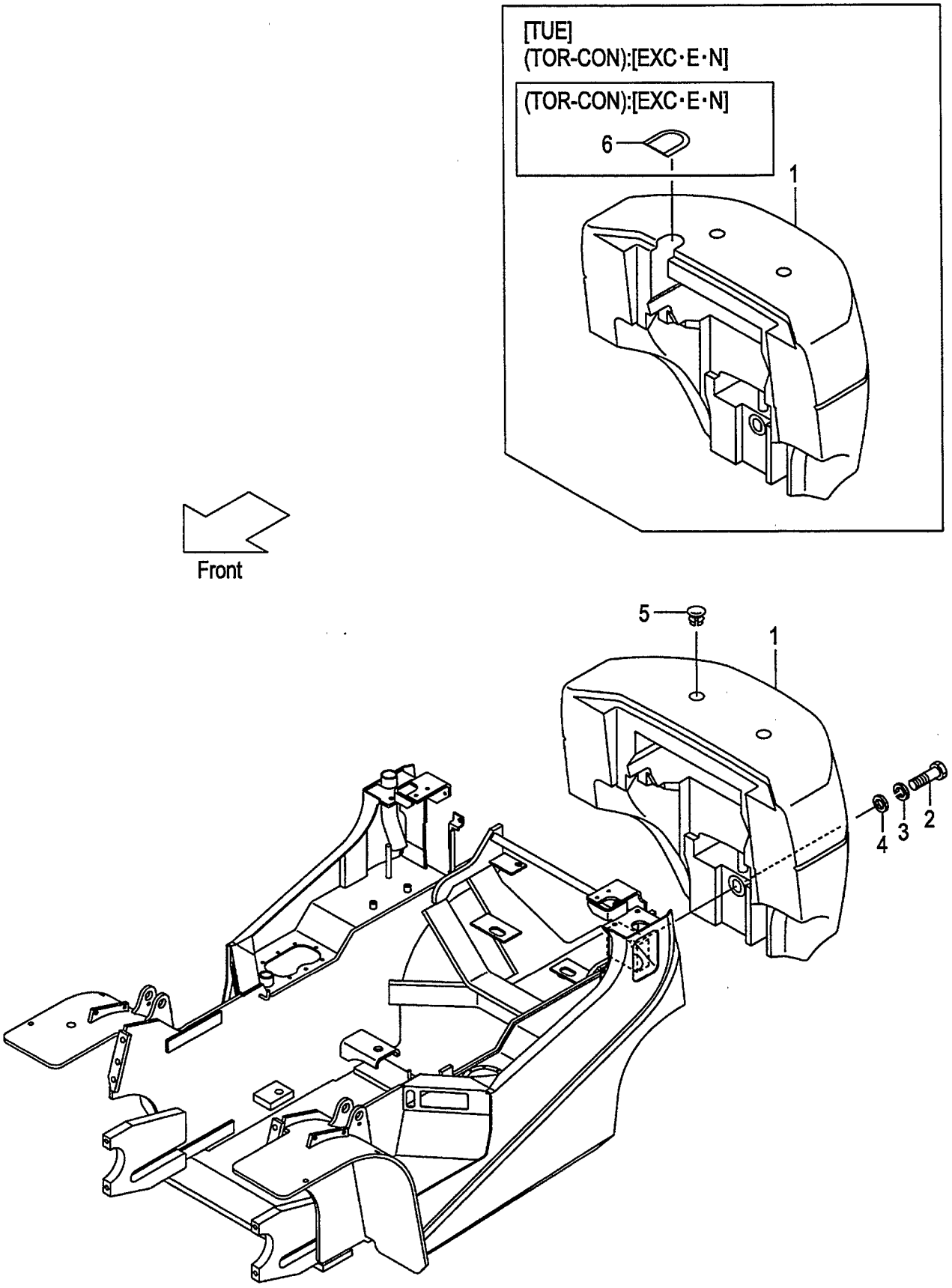

A:FD30C7
B:FD30T7
C:FD30W7

FIG.128
(F6036310)

Item No	Part No.	Mark	Description		Req'd	Remarks : Serial No.
1	NO PART NO.	#	WEIGHT,BALANCE,3.0	ｳｴｲﾄ	1	
2	01110-36200		BOLT	ﾎﾞﾙﾄ	1	
3	02010-00036		WASHER	ﾜｯｼｬ	1	
4	25786-32031		WASHER	ﾜｯｼｬ	1	
5	216G6-32101		CAP	ｷｬｯﾌﾟ	2	
6	516G2-72051		COVER	ｶﾊﾞｰ	1	B
						[EXC][EXE][EXN]

FIG.129 BALANCE WEIGHT [RW]

(F6036320) ﾊﾞﾗﾝｽｳｴｲﾄ

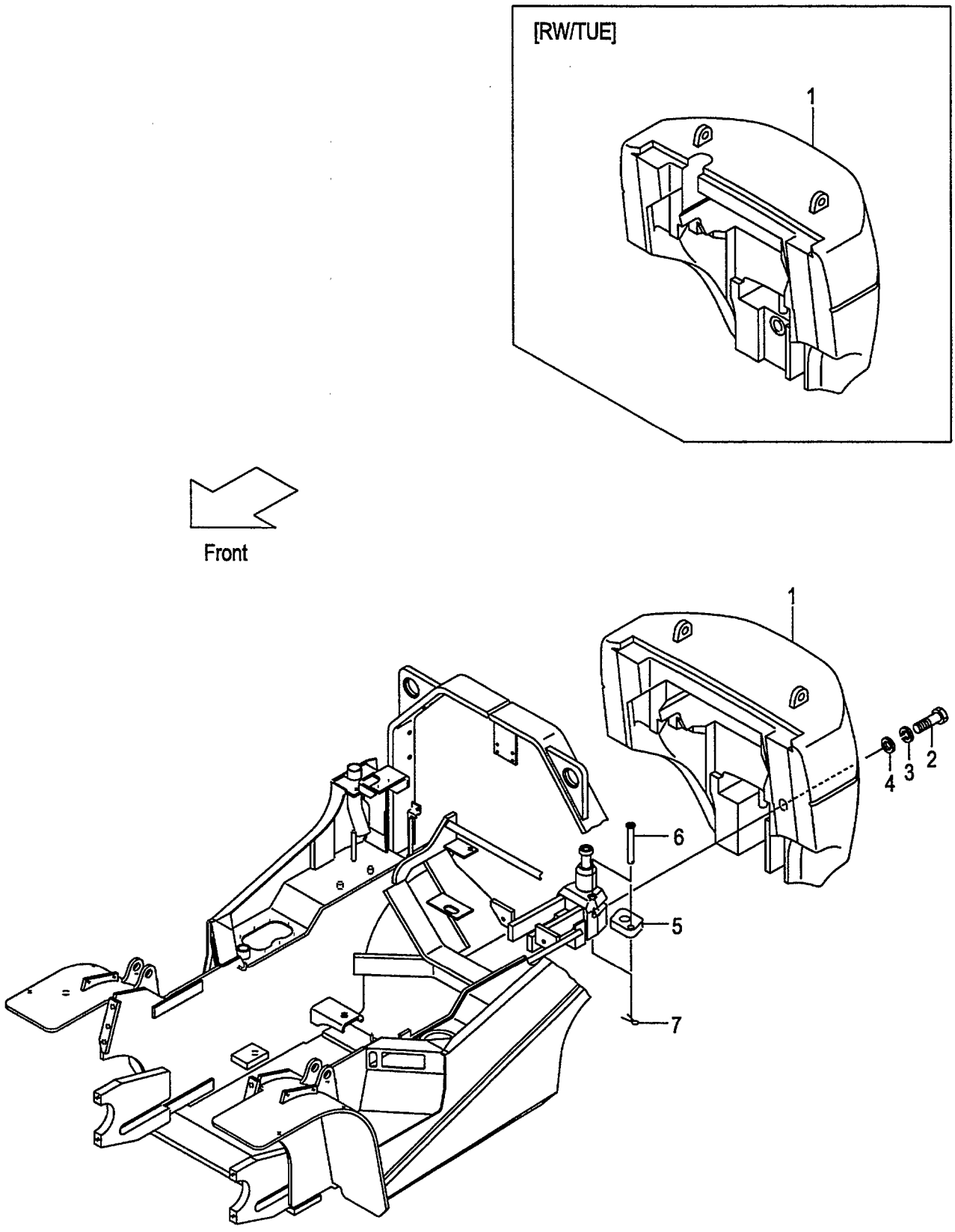

FIG.129
(F6036320)

A:FD30C7 FD30T7 FD30W7

Item No	Part No.	Mark	Description		Req'd	Remarks : Serial No.
1	NO PART NO.	#	WEIGHT,BALANCE,3.0	ｳｴｲﾄ	1	[RW][RW/TUE]
2	01110-30100		BOLT	ﾎﾞﾙﾄ	1	[RW][RW/TUE]
3	02010-00030		WASHER	ﾜｯｼｬ	1	[RW][RW/TUE]
4	22216-30051		WASHER	ﾜｯｼｬ	1	[RW][RW/TUE]
5	52691-92211		STOPPER	ｽﾄｯﾊﾟ	1	[RW][RW/TUE]
6	52691-92221		PIN	ﾋﾟﾝ	1	[RW][RW/TUE]
7	02200-04040		PIN,COTTER	ﾋﾟﾝ	1	[RW][RW/TUE]

FIG.130 BALANCE WEIGHT [HC]

(F6036340) ﾊﾞﾗﾝｽｳｴｲﾄ

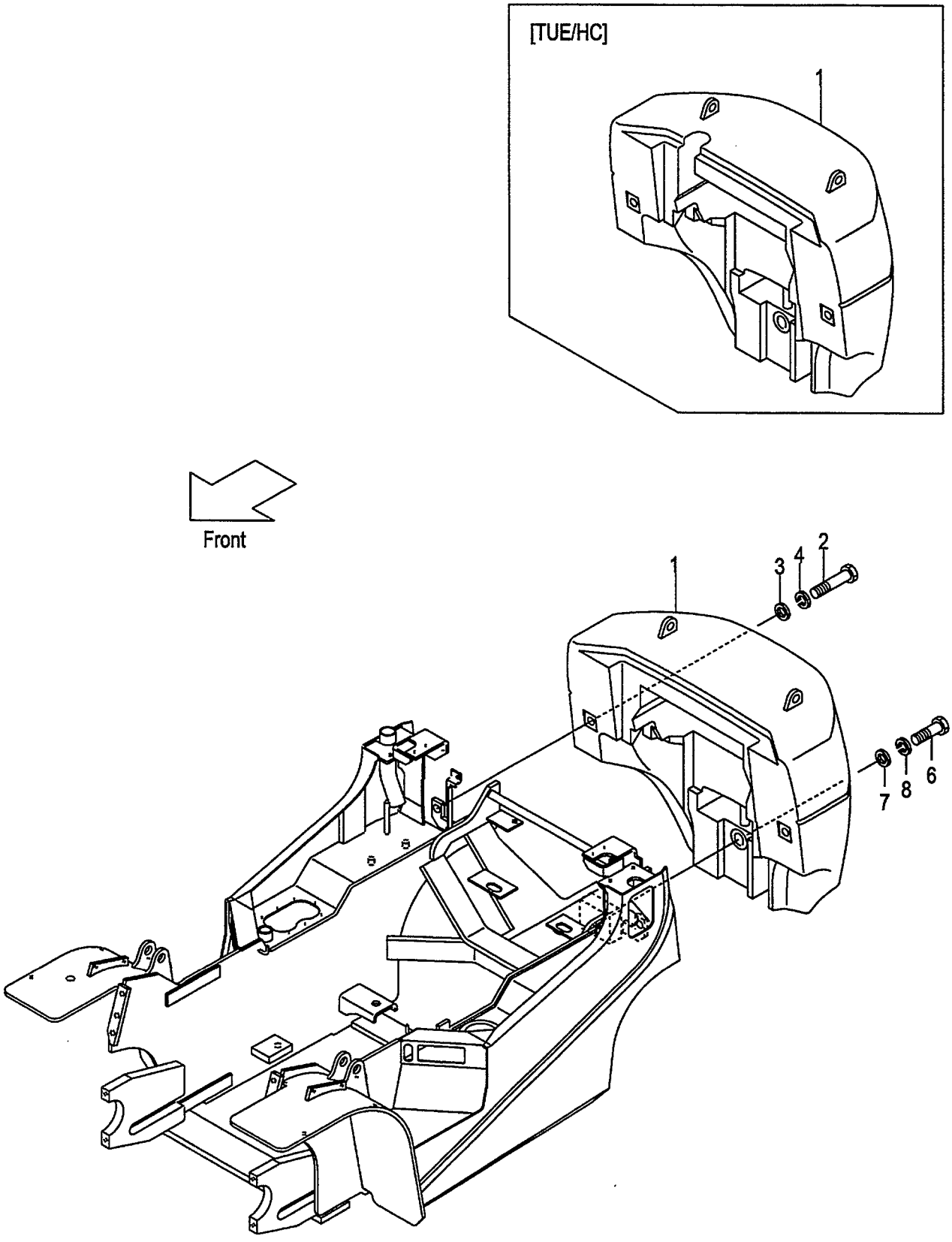

FIG.130
(F6036340)

A:FD30C7 FD30T7 FD30W7

Item No	Part No.	Mark	Description		Req'd	Remarks : Serial No.
1	NO PART NO.	#	WEIGHT,BALANCE,3.0	ウエイト	1	[HC][TUE/HC]
2	01113-30400		BOLT	ボルト	2	[HC][TUE/HC]
3	225R6-32001		WASHER	ワッシャ	2	[HC][TUE/HC]
4	02010-00030		WASHER	ワッシャ	2	[HC][TUE/HC]
5	225R9-12101	+	DECAL,HOOK-CAUTION	デカル	1	[HC][TUE/HC]
6	01110-36200		BOLT	ボルト	1	[HC][TUE/HC]
7	25786-32031		WASHER	ワッシャ	1	[HC][TUE/HC]
8	02010-00036		WASHER	ワッシャ	1	[HC][TUE/HC]

FIG.131 FRONT GUARD

(F6036410) フロントガード

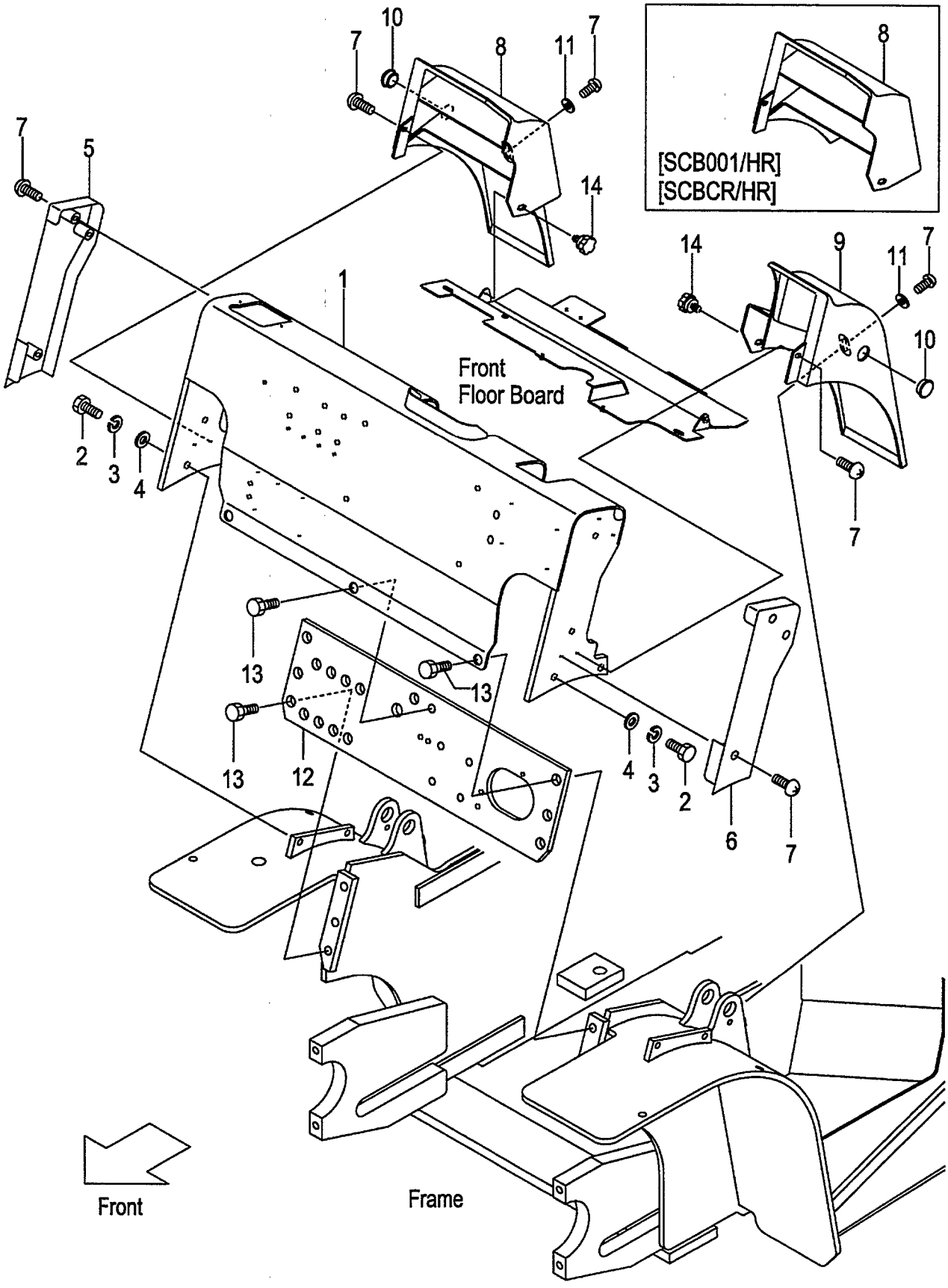

A:FD30C7
B:FD30T7
C:FD30W7

FIG.131
(F6036410)

Item No	Part No.	Mark	Description		Req'd	Remarks : Serial No.
1	239A6-40201		GUARD,FRONT	ｶﾞｰﾄﾞ	1	
-	539A2-60601		GUARD,FRONT	ｶﾞｰﾄﾞ	1	B [EXN]
-	539A9-90201		GUARD,FRONT	ｶﾞｰﾄﾞ	1	[RRE]
2	01186-12030		BOLT	ﾎﾞﾙﾄ	4	
-	01109-12030		BOLT,STAINLESS	ﾎﾞﾙﾄ	4	[FC][SCB001/HR/FC] [SCBCR/HR/FC]
3	02013-00012		WASHER	ﾜｯｼｬ	4	[FC][SCB001/HR/FC] [SCBCR/HR/FC]
4	02001-00012		WASHER	ﾜｯｼｬ	4	[FC][SCB001/HR/FC] [SCBCR/HR/FC]
5	239A6-43001		COVER,SIDE,RH	ｶﾊﾞｰ	1	
6	239A6-43011		COVER,SIDE,LH	ｶﾊﾞｰ	1	
7	214A6-42252		SCREW	ｽｸﾘｭ	10	
8	239A6-43101		COVER,TILT-CYL,RH	ｶﾊﾞｰ	1	
-	539A5-30301		COVER,TILT-CYL,RH	ｶﾊﾞｰ	1	[SCB001/HR][SCBCR/HR] [SCB001/HR/FC][SCBCR/HR/FC]
9	239A6-43111		COVER,TILT-CYL,LH	ｶﾊﾞｰ	1	
10	514A5-12701		PLUG,HOLE	ﾌﾟﾗｸﾞ	2	
11	02000-20010		WASHER	ﾜｯｼｬ	2	
12	239A6-42001		PLATE,FRONT	ﾌﾟﾚｰﾄ	1	
13	216G6-43561		BOLT,FLANGE	ﾎﾞﾙﾄ	7	
14	256C5-12671		BOLT,KNOB	ﾎﾞﾙﾄ	2	

FIG.132 BONNET
(F6036420) ﾎﾞﾝﾈｯﾄ

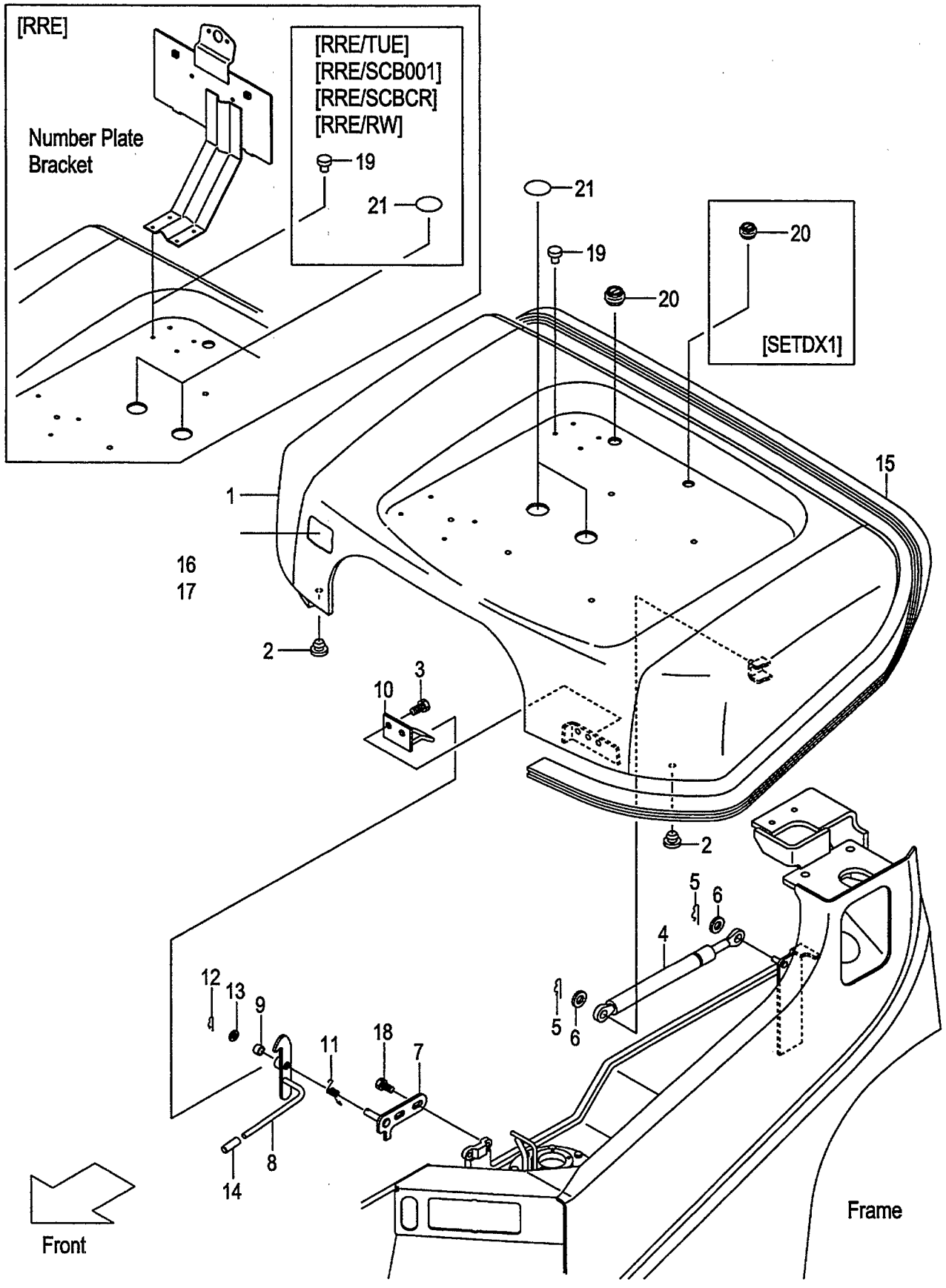

FIG.132
(F6036420)

A:FD30C7 FD30T7 FD30W7

Item No	Part No.	Mark	Description		Req'd	Remarks : Serial No.
1	239A6-40502		BONNET	ﾎﾞﾝﾈｯﾄ	1	
-	539A5-30602		BONNET	ﾎﾞﾝﾈｯﾄ	1	[SCB001][SCBCR]
-	539C1-90402		BONNET	ﾎﾞﾝﾈｯﾄ	1	[RW]
-	539A6-42101		BONNET	ﾎﾞﾝﾈｯﾄ	1	[SETDX1]
2	23456-42181		STOPPER,BONNET	ｽﾄｯﾊﾟ	2	
3	01183-08016		BOLT	ﾎﾞﾙﾄ	2	
4	535C2-60401		SPRING,GAS	ｽﾌﾟﾘﾝｸﾞ	1	
-	539A9-92201		SPRING,GAS	ｽﾌﾟﾘﾝｸﾞ	1	[RRE]
5	216H3-92171		PIN,SNAP	ﾋﾟﾝ	2	
6	02000-00008		WASHER	ﾜｯｼｬ	2	
A1	218G6-40521		CATCH-ASSY,BONNET	ﾎﾞﾝﾈｯﾄｷｬｯﾁｱｯｾﾝ	1	INC.7-13
7	218G6-42451		BRACKET	ﾌﾞﾗｹｯﾄ	1	
8	218G6-42471		LATCH	ﾗｯﾁ	1	
9	23655-22101		BUSHING	ﾌﾞｯｼﾝｸﾞ	1	
10	216G6-42451		HOOK	ﾌｯｸ	1	
11	216G6-42481		SPRING	ｽﾌﾟﾘﾝｸﾞ	1	
12	216H5-42141		PIN,SNAP	ﾋﾟﾝ	1	
13	02000-00010		WASHER	ﾜｯｼｬ	1	
14	216G6-52291		CAP	ｷｬｯﾌﾟ	1	
15	209P6-42841		RUBBER,SEAL,BONNET	ﾗﾊﾞｰ	1	
16	209P6-40401		INSULATOR	ｲﾝｼｭﾚｰﾀ	1	
-	539A6-42111		INSULATOR	ｲﾝｼｭﾚｰﾀ	1	[SETDX1]
17	216G6-42541		CLIP	ｸﾘｯﾌﾟ	10	
18	01185-08020		BOLT	ﾎﾞﾙﾄ	2	
19	25596-42361		RIVET,NYLON	ﾘﾍﾞｯﾄ	4	(WITHOUT RRE)
-	25596-42361		RIVET,NYLON	ﾘﾍﾞｯﾄ	4	[RRE/TUE][RRE/SCB001] [RRE/SCBCR][RRE/RW]
20	27662-62711		GROMMET	ｸﾞﾛﾒｯﾄ	1	
-	27662-63041		GROMMET	ｸﾞﾛﾒｯﾄ	1	[SETDX1]
21	239A6-42251		SHEET,BONNET	ｼｰﾄ	2	(WITHOUT RRE)
-	239A6-42251		SHEET,BONNET	ｼｰﾄ	2	[RRE/TUE][RRE/SCB001] [RRE/SCBCR][RRE/RW]

FIG.133 RADIATOR COVER

(F6036430) ﾗｼﾞｴｰﾀｶﾊﾞｰ

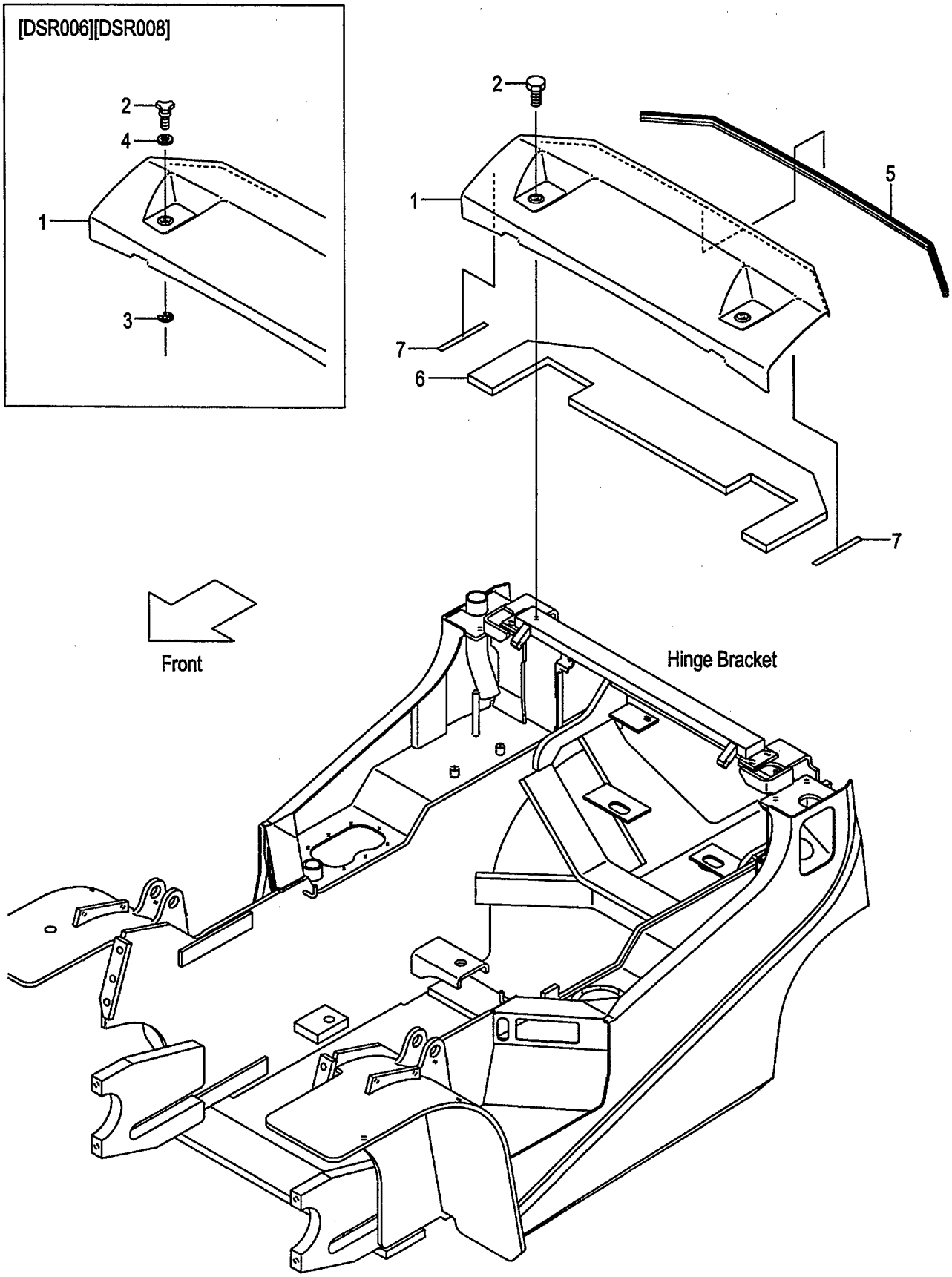

A:FD30C7
B:FD30T7
C:FD30W7

FIG.133
(F6036430)

Item No	Part No.	Mark	Description		Req'd	Remarks : Serial No.
1	239A6-40301		COVER,RADIATOR	ｶﾊﾞｰ	1	
-	539A5-42351		COVER,RADIATOR	ｶﾊﾞｰ	1	[AW061]
2	01181-08016		BOLT	ﾎﾞﾙﾄ	2	
-	222A6-42451		BOLT,KNOB	ﾎﾞﾙﾄ	2	[DSR006][DSR008]
3	222A6-42461		E-RING	Eﾘﾝｸﾞ	2	[DSR006][DSR008]
4	02000-00008		WASHER	ﾜｯｼｬ	2	[DSR006][DSR008]
5	214A6-42121		RUBBER,SEAL	ﾗﾊﾞｰ	1	
6	239A6-42291		RUBBER,RADIATOR-COV.	ﾗﾊﾞｰ	1	
7	234A6-43121		RUBBER	ﾗﾊﾞｰ	2	

FIG.134 RADIATOR COVER [RW]

(F6036440) ﾗｼﾞｴｰﾀｶﾊﾞｰ

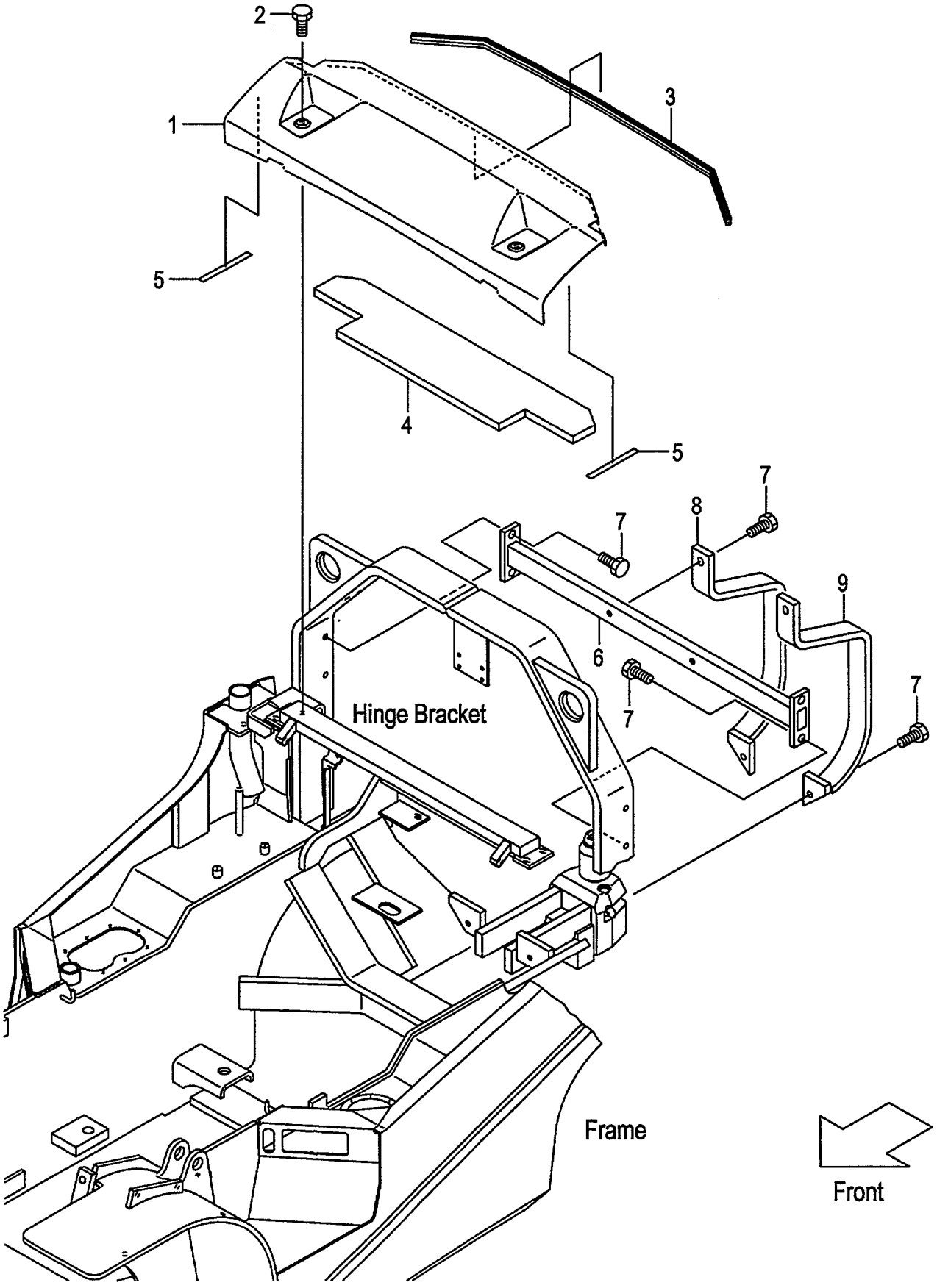

A:FD30C7 FD30T7 FD30W7

Item No	Part No.	Mark	Description		Req'd	Remarks : Serial No.
1	539C1-92301		COVER,RADIATOR	ｶﾊﾞｰ	1	[RW]
2	01181-08016		BOLT	ﾎﾞﾙﾄ	2	[RW]
3	214A6-42121		RUBBER,SEAL	ﾗﾊﾞｰ	1	[RW]
4	539C1-92311		RUBBER,RADIATOR-COV.	ﾗﾊﾞｰ	1	[RW]
5	234A6-43121		RUBBER	ﾗﾊﾞｰ	2	[RW]
6	539C1-92401		BAR,TIE	ﾊﾞｰ	1	[RW]
7	01186-12035		BOLT	ﾎﾞﾙﾄ	8	[RW]
8	539C1-92541		GUARD,MUFFLER,RH	ｶﾞｰﾄﾞ	1	[RW]
9	539C1-92551		GUARD,MUFFLER,LH	ｶﾞｰﾄﾞ	1	[RW]

FIG.135 RADIATOR COVER [SCB001][SCBCR]

(F6036460) ﾗｼﾞｴｰﾀｶﾊﾞｰ

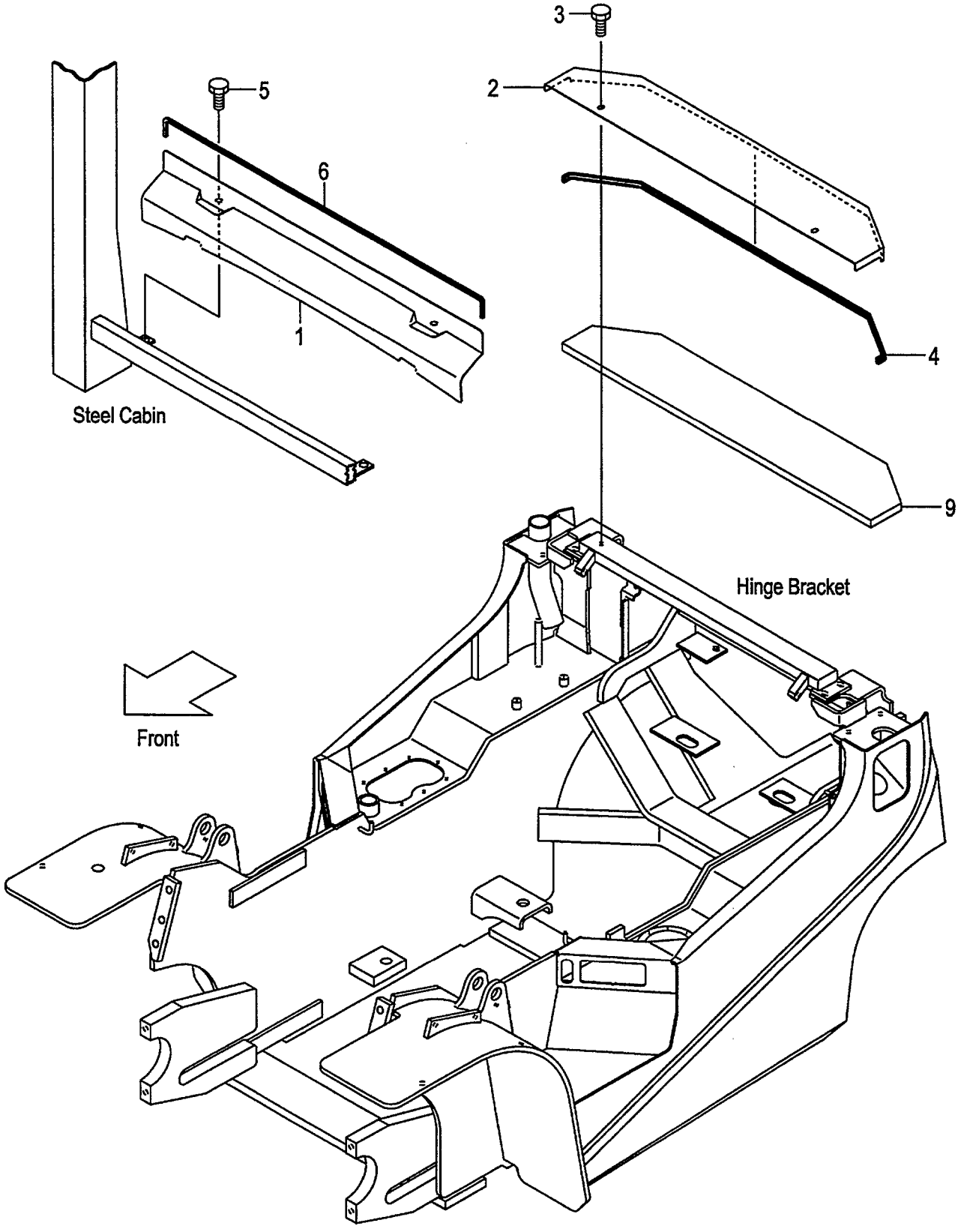

FIG.135
(F6036460)

A:FD30C7 FD30T7 FD30W7

Item No	Part No.	Mark	Description	Req'd	Remarks : Serial No.
1	539A5-32311		COVER,RADIATOR,FRONT カバー	1	[SCB001][SCBCR]
2	539A5-32201		COVER,RADIATOR,REAR カバー	1	[SCB001]
-	539A7-62201		COVER,RADIATOR,REAR カバー	1	[SCBCR]
3	01181-08016		BOLT ボルト	2	[SCB001][SCBCR]
4	214T6-42091		RUBBER,SEAL ラバー	1	[SCB001][SCBCR]
5	01185-08020		BOLT ボルト	2	[SCB001][SCBCR]
6	25816-42761		RUBBER,SEAL ラバー	1	[SCB001][SCBCR]
7	534A5-32651	+	WIRE,LEAD,KEY-SWITCH ワイヤ	1	[SCB001][SCBCR]
8	229F2-42141	+	WIRE-HARNESS,R-COMB. ワイヤハーネス	1	[SCB001][SCBCR]
9	539A5-32541		RUBBER,RADIATOR-COV. ラバー	1	[SCB001][SCBCR]

FIG.136 BONNET HINGE

(F6036470) ﾎﾞﾝﾈｯﾄﾋﾝｼﾞ

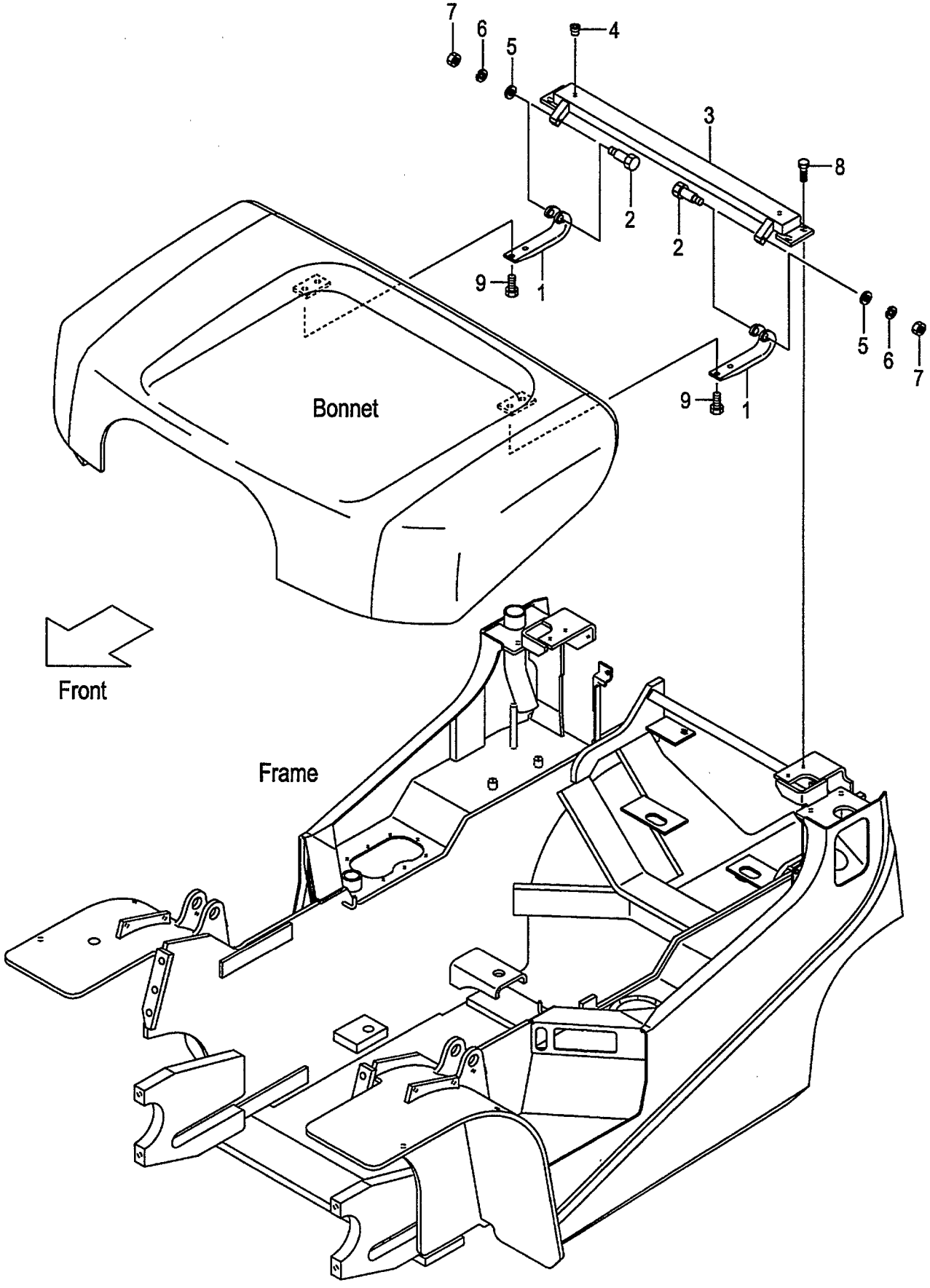

A:FD30C7 FD30T7
B:FD30W7

FIG.136
(F6036470)

Item No	Part No.	Mark	Description		Req'd	Remarks : Serial No.
1	216G6-42911		HINGE	ﾋﾝｼﾞ	2	
2	216G6-42931		BOLT	ﾎﾞﾙﾄ	2	
3	218G6-42302		BRACKET,HINGE	ﾌﾞﾗｹｯﾄ	1	
-	539H6-52202		BRACKET,HINGE	ﾌﾞﾗｹｯﾄ	1	B [DSR006][DSR008]
4	514A5-12011		RIVET,POP	ﾘﾍﾞｯﾄ	2	
5	02000-00006		WASHER	ﾜｯｼｬ	2	
6	02010-00006		WASHER	ﾜｯｼｬ	2	
7	01400-00006		NUT	ﾅｯﾄ	2	
8	01186-10020		BOLT	ﾎﾞﾙﾄ	4	
9	01183-08016		BOLT	ﾎﾞﾙﾄ	4	

FIG.137 FLOOR BOARD

(F6036480) フロアボード

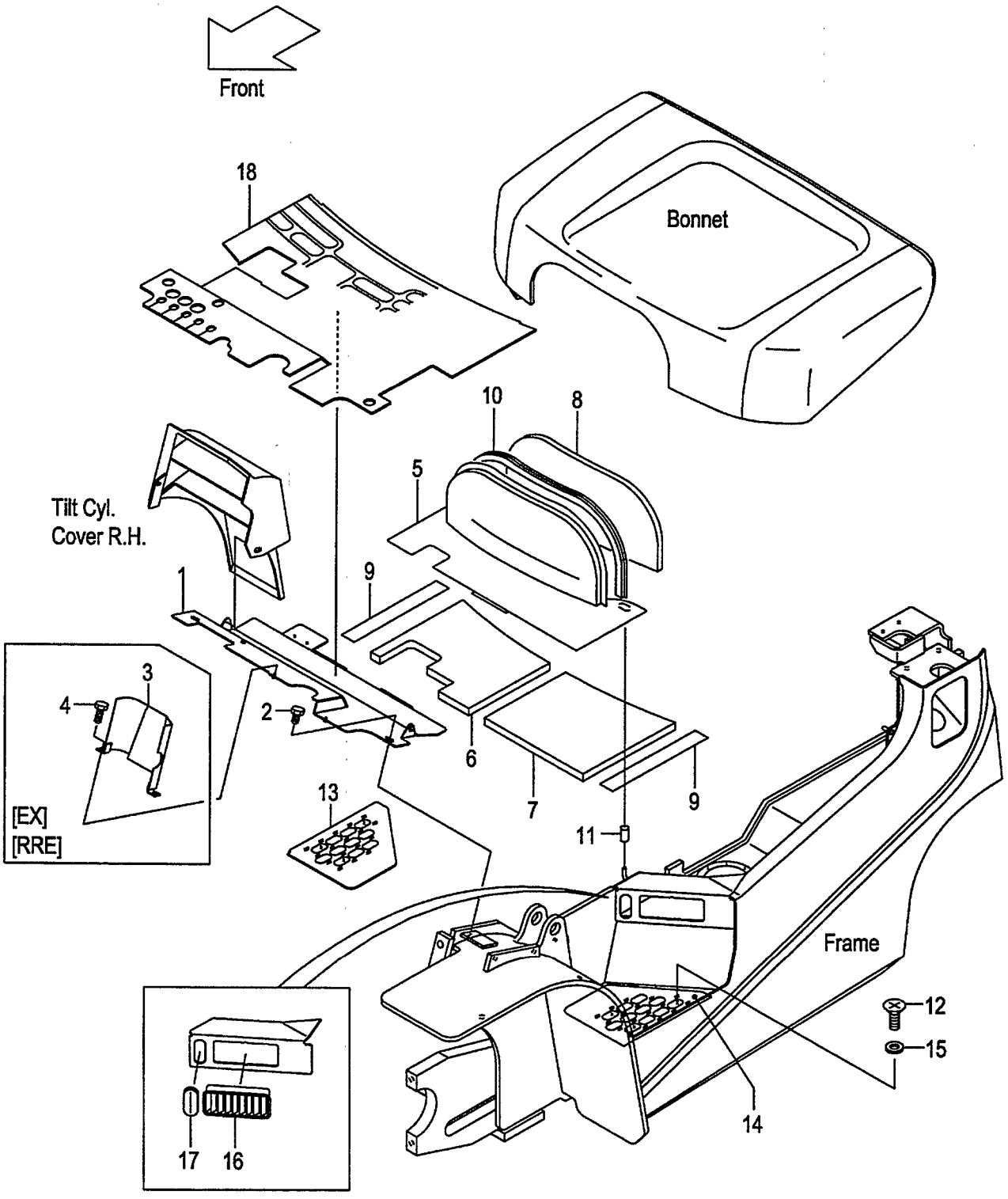

A:FD30C7
B:FD30T7
C:FD30W7

FIG.137
(F6036480)

Item No	Part No.	Mark	Description		Req'd	Remarks : Serial No.
1	239A6-50112		BOARD,FLOOR,FRONT	ﾎﾞｰﾄﾞ	1	
2	01181-08016		BOLT	ﾎﾞﾙﾄ	2	
3	239A6-52601		COVER,FRONT	ｶﾊﾞｰ	1	A [EX]
-	239A6-52601		COVER,FRONT	ｶﾊﾞｰ	1	A,C [RRE]
-	239B6-52601		COVER,FRONT	ｶﾊﾞｰ	1	B [EX][RRE]
4	01186-06012		BOLT	ﾎﾞﾙﾄ	2	A,B [EX]
-	01186-06012		BOLT	ﾎﾞﾙﾄ	2	[RRE]
5	239A6-50302		BOARD,FLOOR,REAR	ﾎﾞｰﾄﾞ	1	A,C
-	239B6-50302		BOARD,FLOOR,REAR	ﾎﾞｰﾄﾞ	1	B
6	239A6-52131		INSULATOR,REAR,RH	ｲﾝｼｭﾚｰﾀ	1	
7	239A6-52141		INSULATOR,REAR,LH	ｲﾝｼｭﾚｰﾀ	1	
8	216G6-52231		INSULATOR,REAR	ｲﾝｼｭﾚｰﾀ	1	
9	239A6-52171		RUBBER,SEAL	ﾗﾊﾞｰ	2	
10	216G6-52271		EDGING	ｴｯｼﾞﾝｸﾞ	1	
11	216G6-52291		CAP	ｷｬｯﾌﾟ	2	
12	214A6-42911		SCREW	ｽｸﾘｭ	6	
13	234A6-42042		STEP,NON-SKID,RH	ｽﾃｯﾌﾟ	1	
14	234A6-42072		STEP,NON-SKID,LH	ｽﾃｯﾌﾟ	1	
15	02000-20010		WASHER	ﾜｯｼｬ	6	
16	230C1-02041		COVER,AIR-INTAKE	ｶﾊﾞｰ	2	
17	209P7-42161		BOOT,LEVER	ﾌﾞｰﾂ	1	
18	239A6-52231		MAT,FLOOR	ﾏｯﾄ	1	A,C
-	239B6-52231		MAT,FLOOR	ﾏｯﾄ	1	B

FIG.138 TRAY
(F6036490) トレー

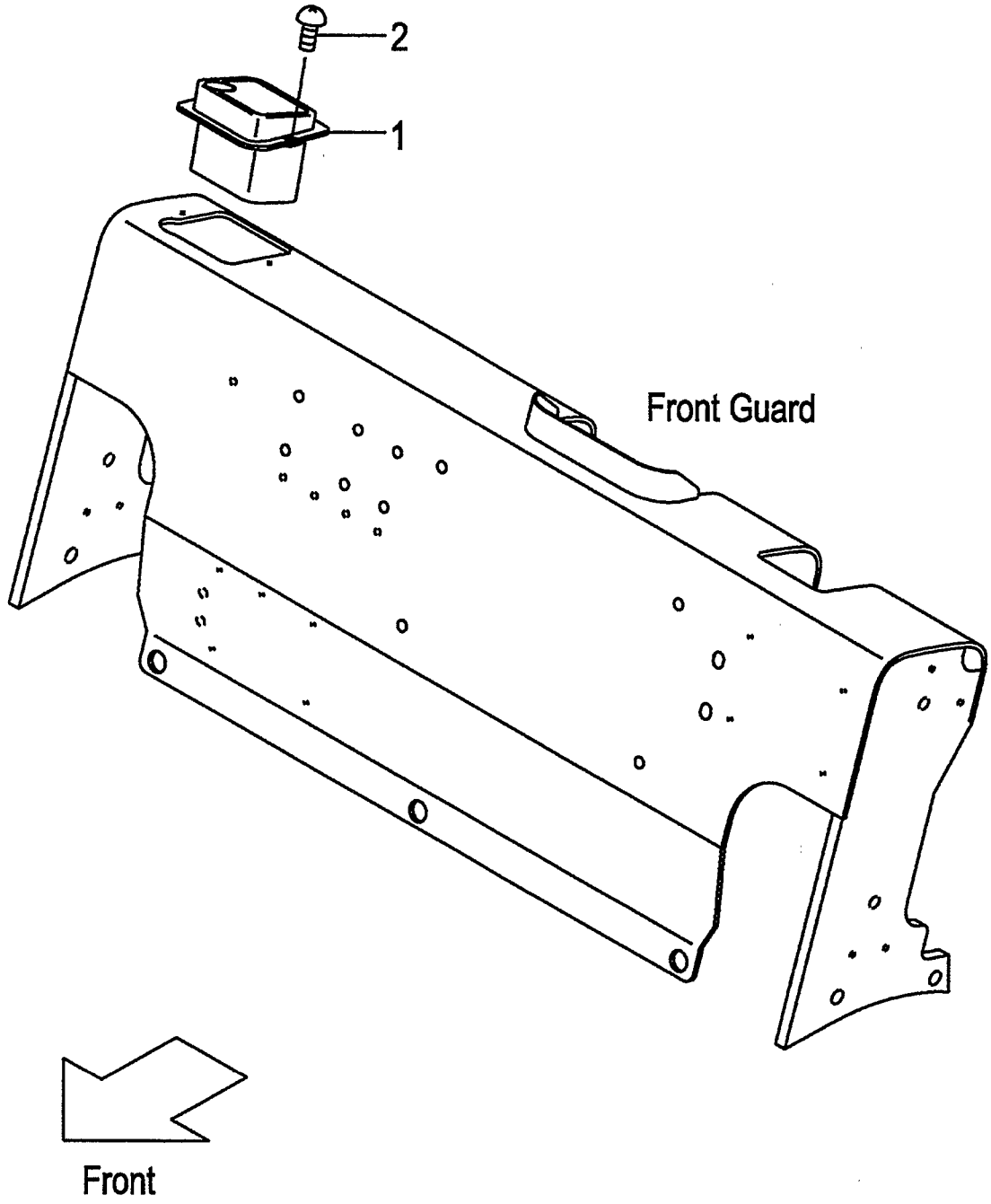

FIG.138
(F6036490)

A:FD30C7 FD30T7 FD30W7

Item No	Part No.	Mark	Description	Req'd	Remarks : Serial No.
1	216G9-32001		TRAY トレー	1	
2	214A6-42252		SCREW スクリュ	2	

FIG.139 TRAY [AW061][AW071][RWL][BB SW][BBASW]

(F60364A0) トレー

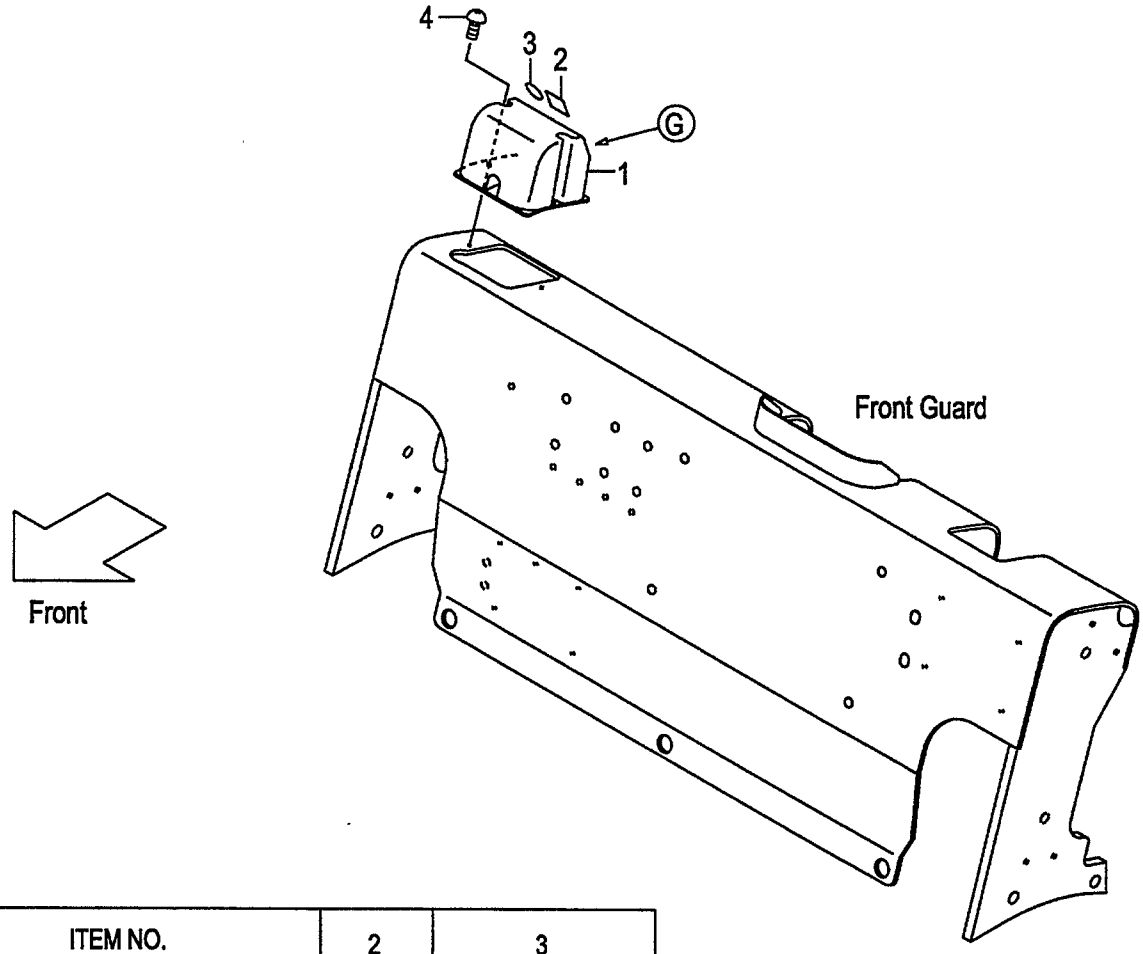

ITEM NO.		2		3			
HOLE		A	B	C	D	E	F
OPTION	[AW]	○	○	○	○		○
	[RWL]	○		○	○	○	
	[BB SW][BBASW]	○	○	○	○		○
	[AW/RWL]	○		○	○		
	[AW/BB SW・BBASW]	○	○		○		○
	[RWL/BB SW・BBASW]	○		○	○		
	[AW/RWL/BB SW・BBASW]	○			○		

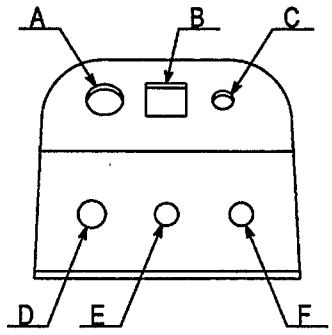

View from G

A:FD30C7 FD30T7 FD30W7

Item No	Part No.	Mark	Description		Req'd	Remarks : Serial No.
1	516G1-42251		BOX,SWITCH	ﾎﾞｯｸｽ	1	[AW061][AW071][RWL][BB SW] [BBASW]
-	516G1-42251		BOX,SWITCH	ﾎﾞｯｸｽ	1	[AW061/RWL][AW071/RWL] [RWL/BB SW][RWL/BBASW]
-	516G1-42251		BOX,SWITCH	ﾎﾞｯｸｽ	1	[AW061/BB SW][AW061/BBASW]
-	516G1-42251		BOX,SWITCH	ﾎﾞｯｸｽ	1	[AW071/BB SW][AW071/BBASW]
-	516G1-42251		BOX,SWITCH	ﾎﾞｯｸｽ	1	[AW061/RWL/BB SW] [AW061/RWL/BBASW]
-	516G1-42251		BOX,SWITCH	ﾎﾞｯｸｽ	1	[AW071/RWL/BB SW] [AW071/RWL/BBASW]
2	229F6-42201		SEAL,PANEL-COVER,A	ｼｰﾙ	2	[AW061][AW071][BB SW][BBASW]
-	229F6-42201		SEAL,PANEL-COVER,A	ｼｰﾙ	1	[RWL]
-	229F6-42201		SEAL,PANEL-COVER,A	ｼｰﾙ	1	[AW061/RWL][AW071/RWL] [RWL/BB SW][RWL/BBASW]
-	229F6-42201		SEAL,PANEL-COVER,A	ｼｰﾙ	2	[AW061/BB SW][AW061/BBASW]
-	229F6-42201		SEAL,PANEL-COVER,A	ｼｰﾙ	2	[AW071/BB SW][AW071/BBASW]
-	229F6-42201		SEAL,PANEL-COVER,A	ｼｰﾙ	1	[AW061/RWL/BB SW] [AW061/RWL/BBASW]
-	229F6-42201		SEAL,PANEL-COVER,A	ｼｰﾙ	1	[AW071/RWL/BB SW] [AW071/RWL/BBASW]
3	229F6-42211		SEAL,PANEL-COVER,B	ｼｰﾙ	3	[AW061][AW071][RWL][BB SW] [BBASW]
-	229F6-42211		SEAL,PANEL-COVER,B	ｼｰﾙ	2	[AW061/RWL][AW071/RWL] [RWL/BB SW][RWL/BBASW]
-	229F6-42211		SEAL,PANEL-COVER,B	ｼｰﾙ	2	[AW061/BB SW][AW061/BBASW]
-	229F6-42211		SEAL,PANEL-COVER,B	ｼｰﾙ	2	[AW071/BB SW][AW071/BBASW]
-	229F6-42211		SEAL,PANEL-COVER,B	ｼｰﾙ	1	[AW061/RWL/BB SW] [AW061/RWL/BBASW]
-	229F6-42211		SEAL,PANEL-COVER,B	ｼｰﾙ	1	[AW071/RWL/BB SW] [AW071/RWL/BBASW]
4	214A6-42252		SCREW	ｽｸﾘｭ	2	[AW061][AW071][RWL][BB SW] [BBASW]
-	214A6-42252		SCREW	ｽｸﾘｭ	2	[AW061/RWL][AW071/RWL] [RWL/BB SW][RWL/BBASW]
-	214A6-42252		SCREW	ｽｸﾘｭ	2	[AW061/BB SW][AW061/BBASW]
-	214A6-42252		SCREW	ｽｸﾘｭ	2	[AW071/BB SW][AW071/BBASW]
-	214A6-42252		SCREW	ｽｸﾘｭ	2	[AW061/RWL/BB SW] [AW061/RWL/BBASW]
-	214A6-42252		SCREW	ｽｸﾘｭ	2	[AW071/RWL/BB SW] [AW071/RWL/BBASW]

FIG.140 TRAY [SM][AM][TPM]

(F60364C0) トレー

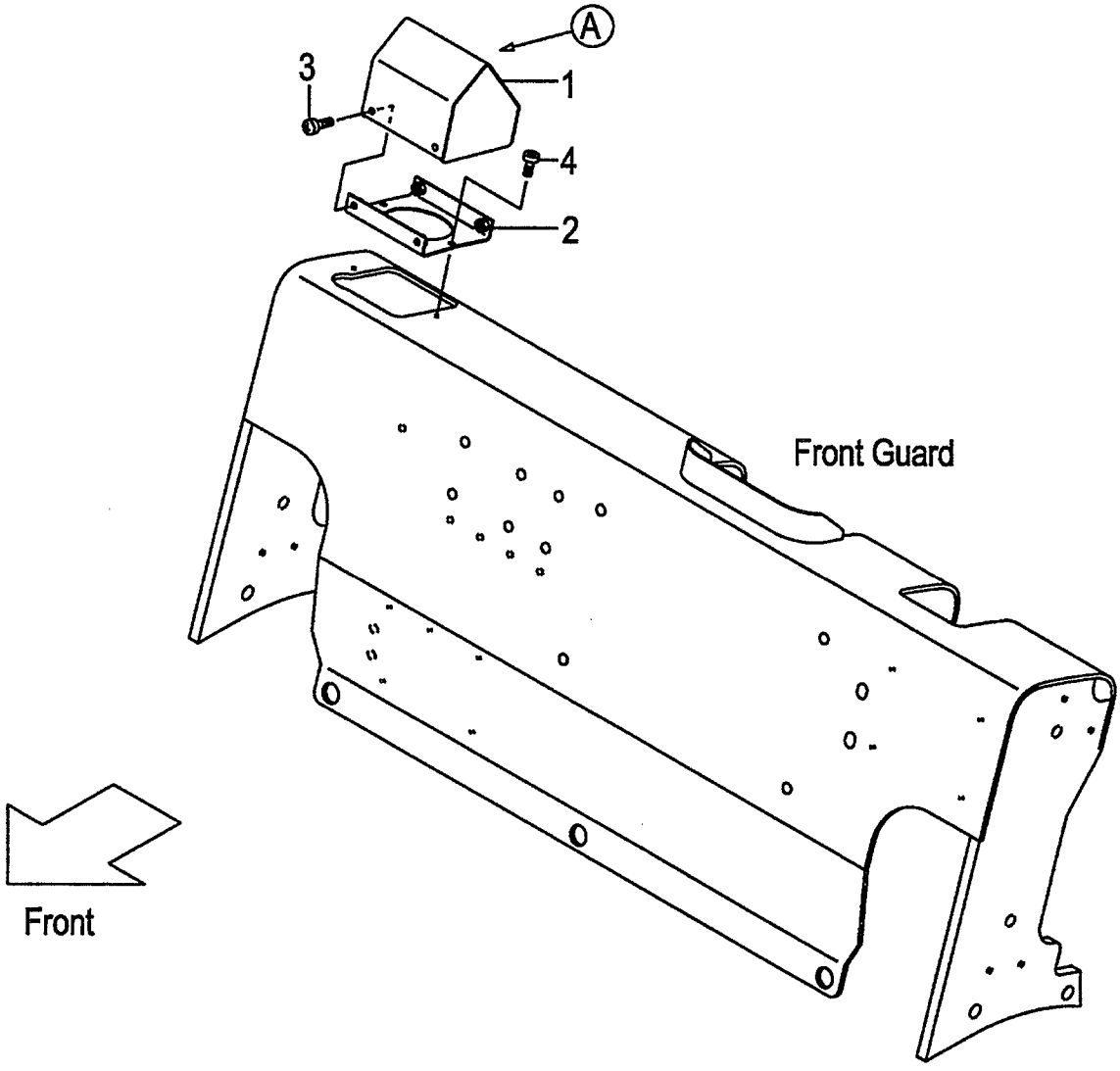

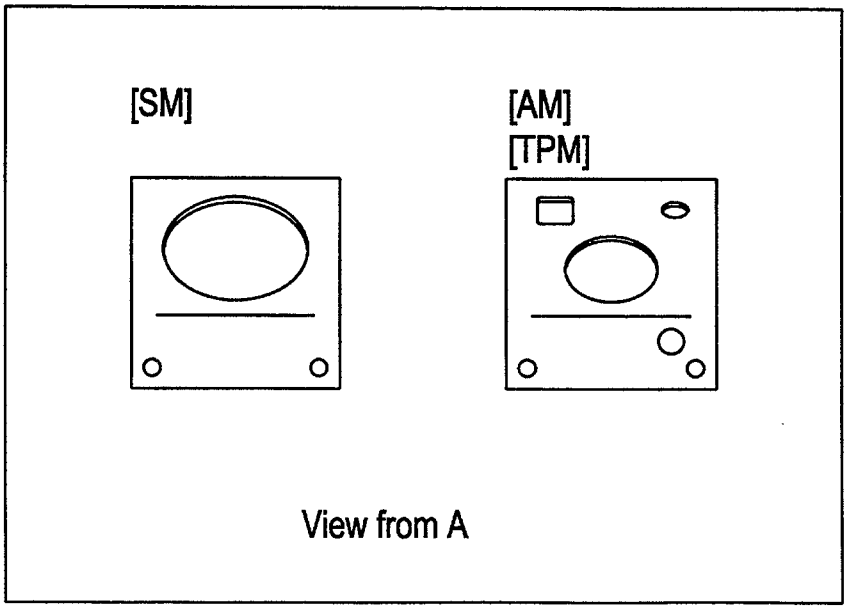

A:FD30C7 FD30T7 FD30W7

Item No	Part No.	Mark	Description		Req'd	Remarks : Serial No.
1	516G7-50401		BOX,METER	ﾎﾞｯｸｽ	1	[SM]
-	516G6-90401		BOX,METER	ﾎﾞｯｸｽ	1	[AM][TPM]
2	516G1-42021		BRACKET	ﾌﾞﾗｹｯﾄ	1	[SM][AM][TPM]
3	214A6-42771		SCREW	ｽｸﾘｭ	4	[SM][AM][TPM]
4	214A6-42252		SCREW	ｽｸﾘｭ	2	[SM][AM][TPM]

FIG.141 TRAY [SM/(BB SW,BBASW)][SM/(BB SW,BBASW)/RWL]

(F60364D0) トレー

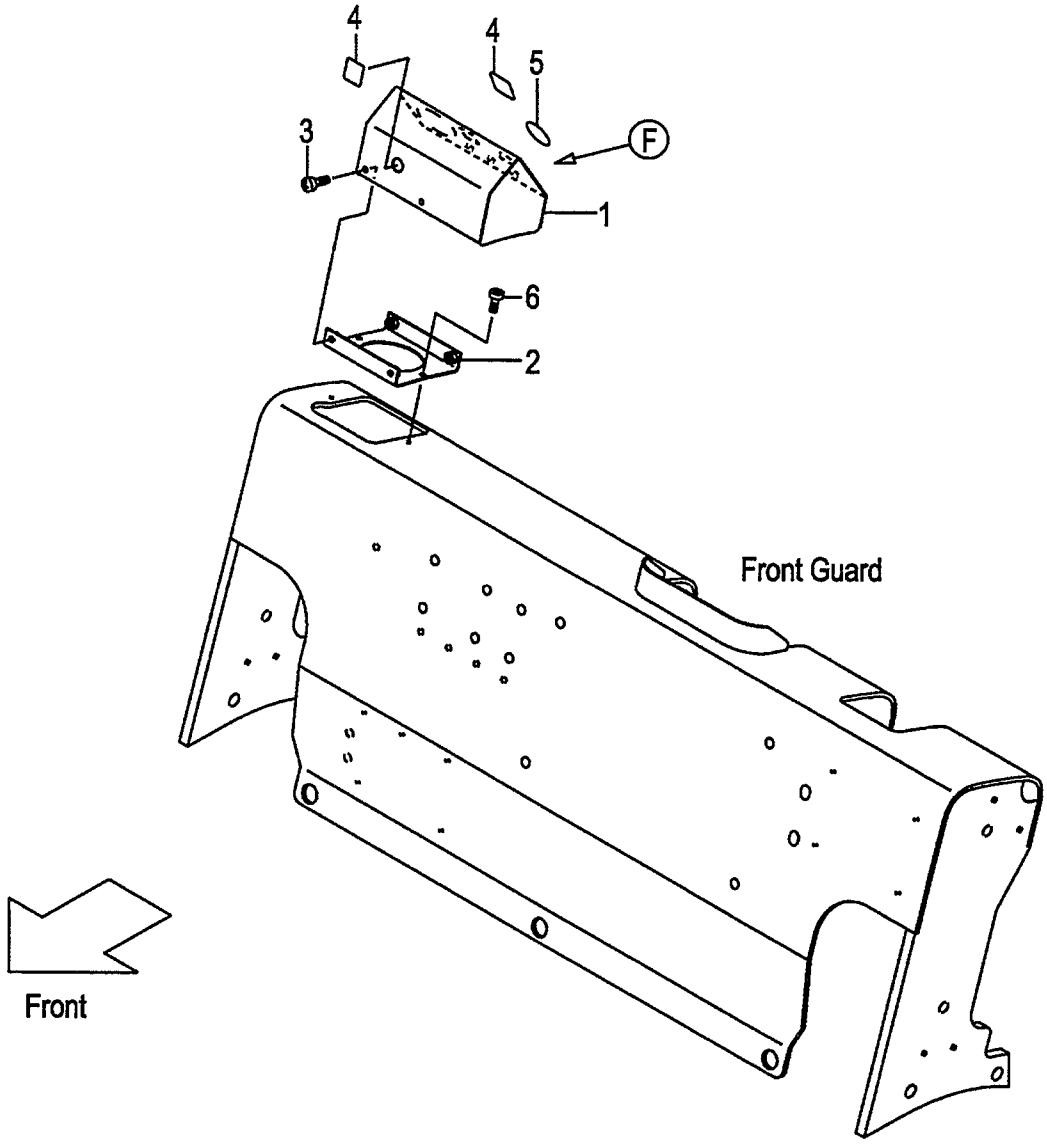

ITEM NO.		4		5		
HOLE		A	B	C	D	E
OPTION	[SM/BB SW·BBASW]	○	○		○	○
	[SM/BB SW·BBASW/RWL]	○			○	

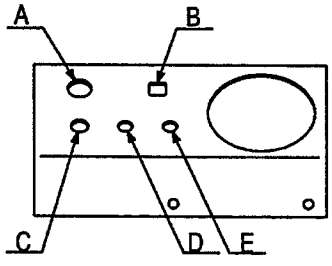

View from F

FIG.141
(F60364D0)

A:FD30C7 FD30T7 FD30W7

Item No	Part No.	Mark	Description		Req'd	Remarks : Serial No.
1	516G7-50201		BOX,METER & SWITCH	ﾎﾞｯｸｽ	1	[SM/BB SW][SM/BBASW] [SM/BB SW/RWL][SM/BBASW/RWL]
2	516G1-42021		BRACKET	ﾌﾞﾗｹｯﾄ	1	[SM/BB SW][SM/BBASW] [SM/BB SW/RWL][SM/BBASW/RWL]
3	214A6-42771		SCREW	ｽｸﾘｭ	4	[SM/BB SW][SM/BBASW] [SM/BB SW/RWL][SM/BBASW/RWL]
4	229F6-42201		SEAL,PANEL-COVER,A	ｼｰﾙ	3	[SM/BB SW][SM/BBASW]
-	229F6-42201		SEAL,PANEL-COVER,A	ｼｰﾙ	2	[SM/BB SW/RWL][SM/BBASW/RWL]
5	229F6-42211		SEAL,PANEL-COVER,B	ｼｰﾙ	2	[SM/BB SW][SM/BBASW]
-	229F6-42211		SEAL,PANEL-COVER,B	ｼｰﾙ	1	[SM/BB SW/RWL][SM/BBASW/RWL]
6	214A6-42361		SCREW	ｽｸﾘｭ	2	[SM/BB SW][SM/BBASW] [SM/BB SW/RWL][SM/BBASW/RWL]

FIG.142 TRAY [SM/(AW061,AW071)/RWL]

(F60364E0) トレー

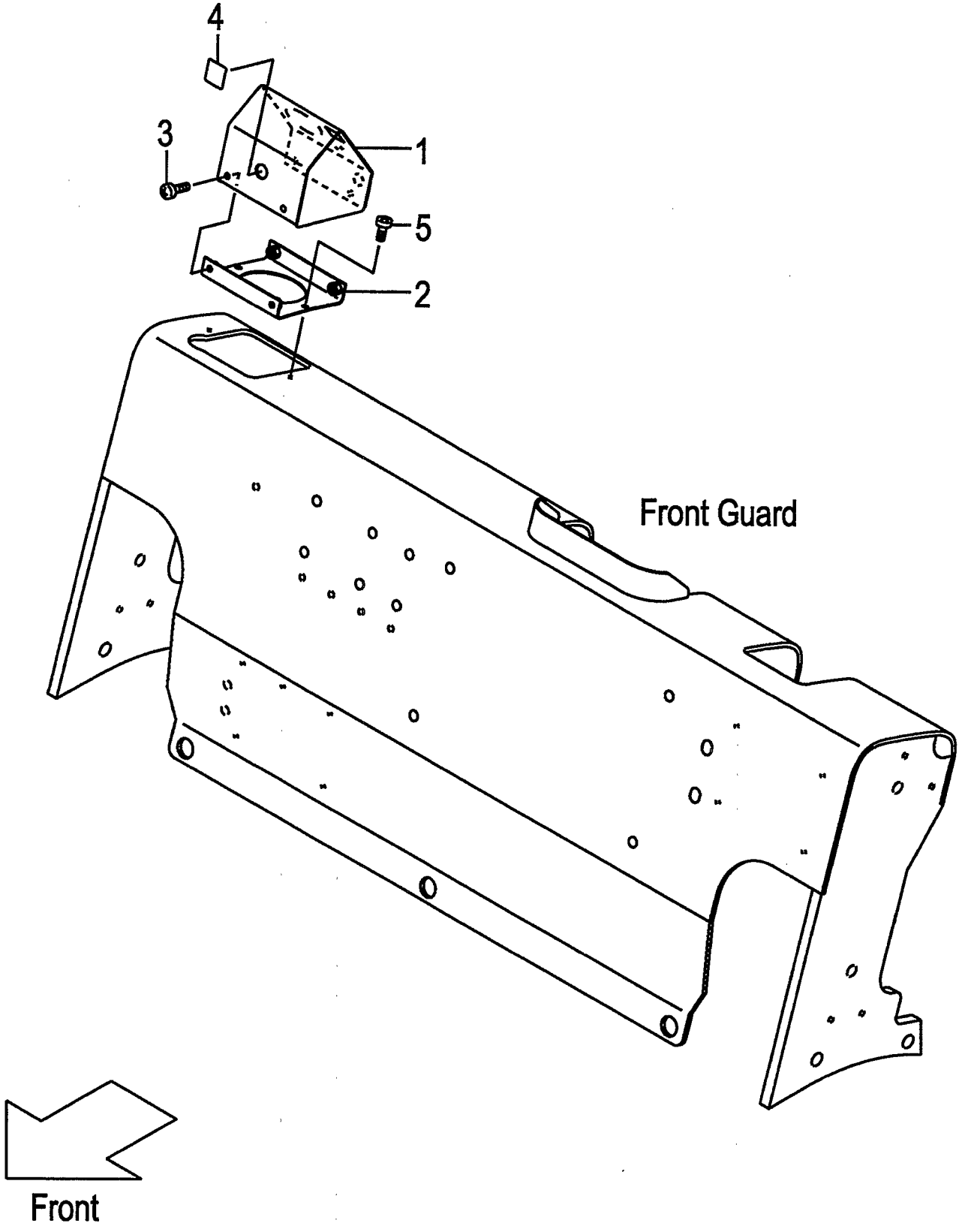

A:FD30C7 FD30T7 FD30W7

Item No	Part No.	Mark	Description	Req'd	Remarks : Serial No.
1	516G7-50211		BOX,METER & SWITCH ﾎﾞｯｸｽ	1	[SM/AW061/RWL][SM/AW071/RWL]
2	516G1-42021		BRACKET ﾌﾞﾗｹｯﾄ	1	[SM/AW061/RWL][SM/AW071/RWL]
3	214A6-42771		SCREW ｽｸﾘｭ	4	[SM/AW061/RWL][SM/AW071/RWL]
4	229F6-42201		SEAL,PANEL-COVER,A ｼｰﾙ	1	[SM/AW061/RWL][SM/AW071/RWL]
5	214A6-42361		SCREW ｽｸﾘｭ	2	[SM/AW061/RWL][SM/AW071/RWL]

FIG.143 FRONT GUARD BOOT [FC]

(F60364F0) ﾌﾛﾝﾄｶﾞｰﾄﾞﾌﾞｰﾂ

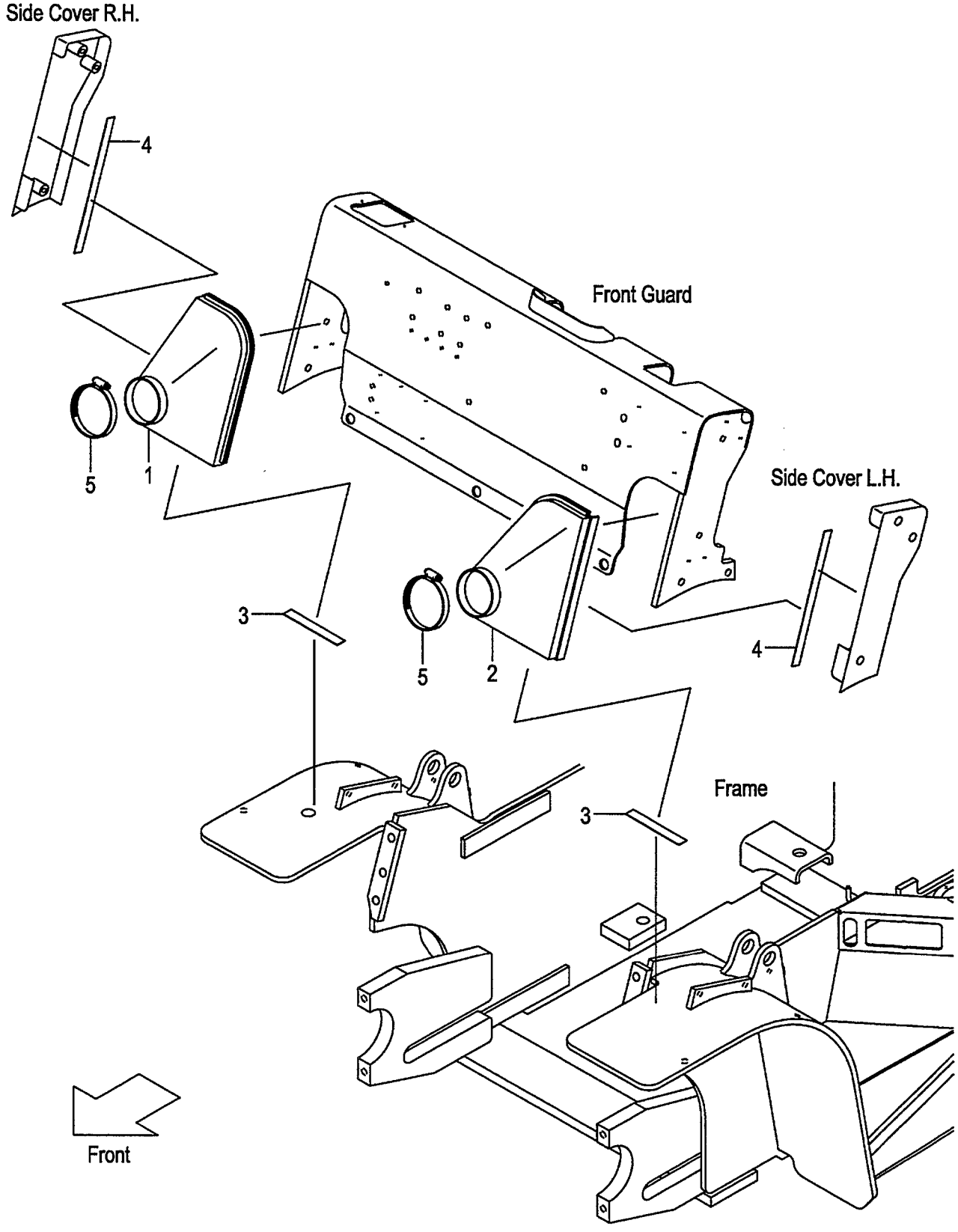

A:FD30C7 FD30T7 FD30W7

Item No	Part No.	Mark	Description		Req'd	Remarks : Serial No.
1	539A5-30251		BOOT,RH	ﾌﾞｰﾂ	1	[FC]
2	539A5-30261		BOOT,LH	ﾌﾞｰﾂ	1	[FC]
3	577H3-72181		TAPE	ﾃｰﾌﾟ	2	[FC]
4	539A5-32301		TAPE	ﾃｰﾌﾟ	2	[FC]
5	539A5-32091		CLAMP,HOSE	ｸﾗﾝﾌﾟ	2	[FC]

FIG.144 SEAT

(F6036810) シート

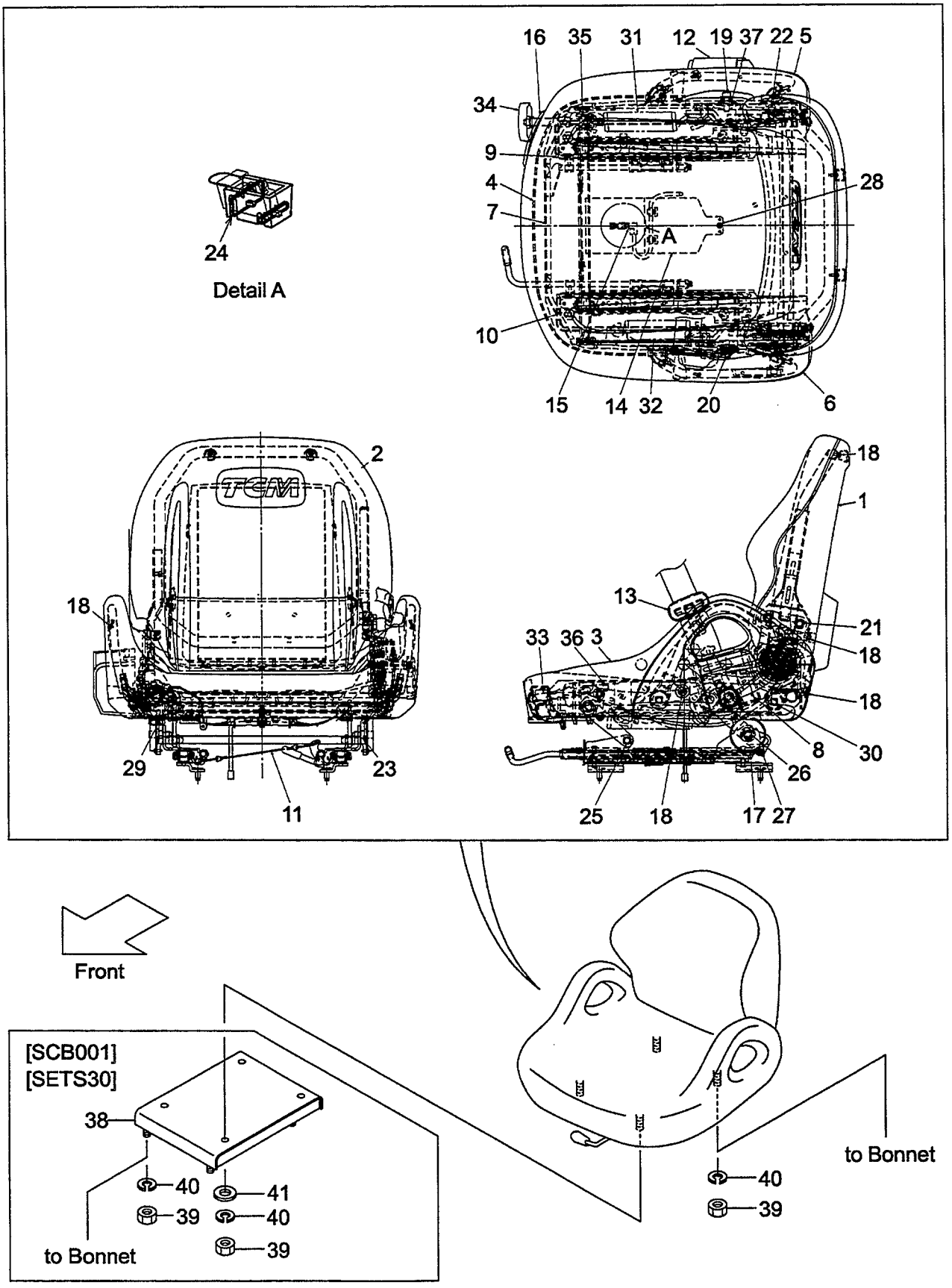

A:FD30C7 FD30T7 FD30W7

Item No	Part No.	Mark	Description		Req'd	Remarks : Serial No.
A1	242F6-80101		SEAT-ASSY	ｼｰﾄｱｯｾﾝ	1	INC.1-13,16-23,25-37
-	542F3-80101		SEAT-ASSY	ｼｰﾄｱｯｾﾝ	1	(SEAT SW) INC.1-37
1	242F6-82001		BOARD,SEAT-BACK	ﾎﾞｰﾄﾞ	1	
2	242F6-82011		PAD,SEAT-BACK	ﾊﾟｯﾄﾞ	1	
3	242F6-82021		PAD,SEAT-CUSHION	ﾊﾟｯﾄﾞ	1	
4	242F6-82031		PANEL,SEAT-CUSHION	ﾊﾟﾈﾙ	1	
5	242F6-82041		SHIELD,RH	ｼｰﾙﾄﾞ	1	
6	242F6-82051		SHIELD,LH	ｼｰﾙﾄﾞ	1	
7	242F6-82061		FRAME	ﾌﾚｰﾑ	1	
8	242F6-82071		LEVER	ﾚﾊﾞｰ	1	
9	242F6-82081		TRACK,RH	ﾄﾗｯｸ	1	
10	242F6-82091		TRACK,LH	ﾄﾗｯｸ	1	
11	242F6-82101		WIRE	ﾜｲﾔ	1	
12	242F6-82111		BELT,SEAT,OUTER	ﾍﾞﾙﾄ	1	
13	242F6-82121		BELT,SEAT,INNER	ﾍﾞﾙﾄ	1	
14	542F3-82001		PLATE,SEAT-CUSHION	ﾌﾟﾚｰﾄ	1	(SEAT SW)
15	542F3-82011		SWITCH,SEAT	ｽｲｯﾁ	1	(SEAT SW)
16	242F6-82131		CONTROL,SUSPENSION	ｺﾝﾄﾛｰﾙ	1	
17	242F6-82141		ABSORBER,SUSPENSION	ｱﾌﾞｿｰﾊﾞ	2	
18	242F6-82151		SCREW	ｽｸﾘｭ	10	
19	242F6-82161		BOLT	ﾎﾞﾙﾄ	1	
20	242F6-82171		BOLT	ﾎﾞﾙﾄ	1	
21	242F6-82181		BOLT	ﾎﾞﾙﾄ	2	
22	242F6-82191		BOLT	ﾎﾞﾙﾄ	1	
23	242F6-82201		COLLAR	ｶﾗｰ	4	
24	542F3-82021		CLAMP	ｸﾗﾝﾌﾟ	2	(SEAT SW)
25	242F6-82211		BOLT	ﾎﾞﾙﾄ	2	
26	242F6-82221		BOLT	ﾎﾞﾙﾄ	2	
27	242F6-82231		SCREW	ｽｸﾘｭ	4	
28	242F6-82241		SCREW	ｽｸﾘｭ	1	(SEAT SW)
29	242F6-82251		SCREW	ｽｸﾘｭ	2	
30	242F6-82261		BOLT	ﾎﾞﾙﾄ	4	
31	242F6-82271		SPRING,TENSION	ｽﾌﾟﾘﾝｸﾞ	1	
32	242F6-82281		SPRING,TENSION	ｽﾌﾟﾘﾝｸﾞ	1	
33	242F6-82291		SHAFT,SUS-CONTROL	ｼｬﾌﾄ	1	
34	242F6-82301		HANDLE,SUS-CONTROL	ﾊﾝﾄﾞﾙ	1	
35	242F6-82311		PIN	ﾋﾟﾝ	1	
36	242F6-82321		NUT	ﾅｯﾄ	1	
37	242F6-82331		WASHER	ﾜｯｼｬ	1	
38	534A5-32311		SPACER,SEAT	ｽﾍﾟｰｻ	1	[SCB001][SETS30]
39	01400-00008		NUT	ﾅｯﾄ	4	
-	01400-00008		NUT	ﾅｯﾄ	8	[SCB001][SETS30]
40	02010-00008		WASHER	ﾜｯｼｬ	4	
-	02010-00008		WASHER	ﾜｯｼｬ	8	[SCB001][SETS30]
41	02000-00008		WASHER	ﾜｯｼｬ	4	[SCB001][SETS30]

FIG.145 SEAT [HGL]

(F6036830) シート

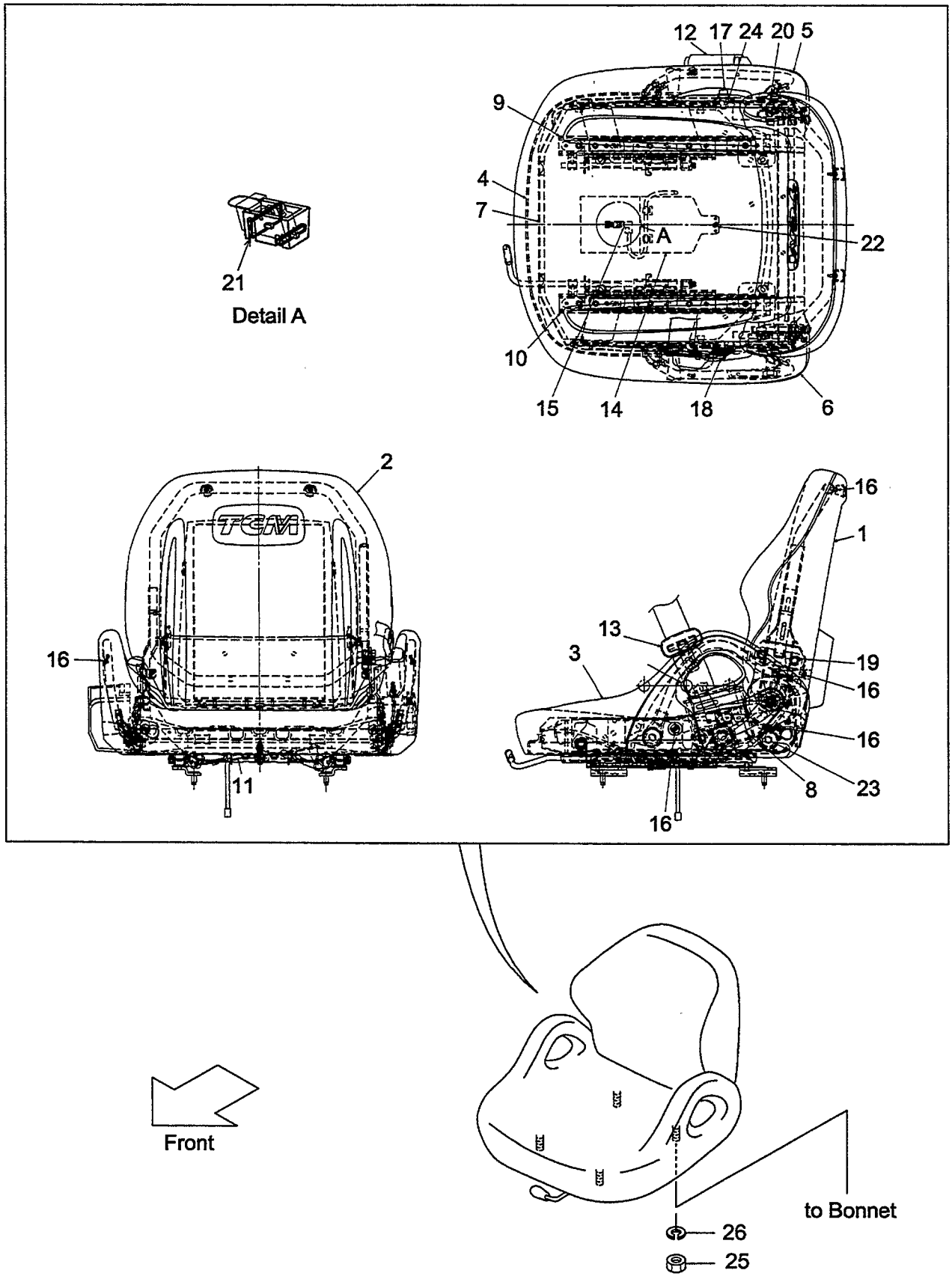

FIG.145
(F6036830)

A:FD30C7 FD30T7 FD30W7

Item No	Part No.	Mark	Description		Req'd	Remarks : Serial No.
A1	242F6-80201		SEAT-ASSY	ｼｰﾄｱｯｾﾝ	1	[HGL] INC.1-13,16-20,23,24
-	542F3-80201		SEAT-ASSY	ｼｰﾄｱｯｾﾝ	1	[HGL](SEAT SW) INC.1-24
1	242F6-82001		BOARD,SEAT-BACK	ﾎﾞｰﾄﾞ	1	[HGL]
2	242F6-82011		PAD,SEAT-BACK	ﾊﾟｯﾄﾞ	1	[HGL]
3	242F6-82021		PAD,SEAT-CUSHION	ﾊﾟｯﾄﾞ	1	[HGL]
4	242F6-82031		PANEL,SEAT-CUSHION	ﾊﾟﾈﾙ	1	[HGL]
5	242F6-82041		SHIELD,RH	ｼｰﾙﾄﾞ	1	[HGL]
6	242F6-82051		SHIELD,LH	ｼｰﾙﾄﾞ	1	[HGL]
7	242F6-82061		FRAME	ﾌﾚｰﾑ	1	[HGL]
8	242F6-82071		LEVER	ﾚﾊﾞｰ	1	[HGL]
9	242F6-82081		TRACK,RH	ﾄﾗｯｸ	1	[HGL]
10	242F6-82091		TRACK,LH	ﾄﾗｯｸ	1	[HGL]
11	242F6-82101		WIRE	ﾜｲﾔ	1	[HGL]
12	242F6-82111		BELT,SEAT,OUTER	ﾍﾞﾙﾄ	1	[HGL]
13	242F6-82121		BELT,SEAT,INNER	ﾍﾞﾙﾄ	1	[HGL]
14	542F3-82001		PLATE,SEAT-CUSHION	ﾌﾟﾚｰﾄ	1	[HGL](SEAT SW)
15	542F3-82011		SWITCH,SEAT	ｽｲｯﾁ	1	[HGL](SEAT SW)
16	242F6-82151		SCREW	ｽｸﾘｭ	10	[HGL]
17	242F6-82161		BOLT	ﾎﾞﾙﾄ	1	[HGL]
18	242F6-82171		BOLT	ﾎﾞﾙﾄ	1	[HGL]
19	242F6-82181		BOLT	ﾎﾞﾙﾄ	2	[HGL]
20	242F6-82191		BOLT	ﾎﾞﾙﾄ	1	[HGL]
21	542F3-82021		CLAMP	ｸﾗﾝﾌﾟ	2	[HGL](SEAT SW)
22	242F6-82241		SCREW	ｽｸﾘｭ	1	[HGL](SEAT SW)
23	242F6-82261		BOLT	ﾎﾞﾙﾄ	4	[HGL]
24	242F6-82291		SHAFT,SUS-CONTROL	ｼｬﾌﾄ	1	[HGL]
25	01400-00008		NUT	ﾅｯﾄ	4	[HGL]
26	02010-00008		WASHER	ﾜｯｼｬ	4	[HGL]

FIG.146 SEAT [RW]

(F6036840) シート

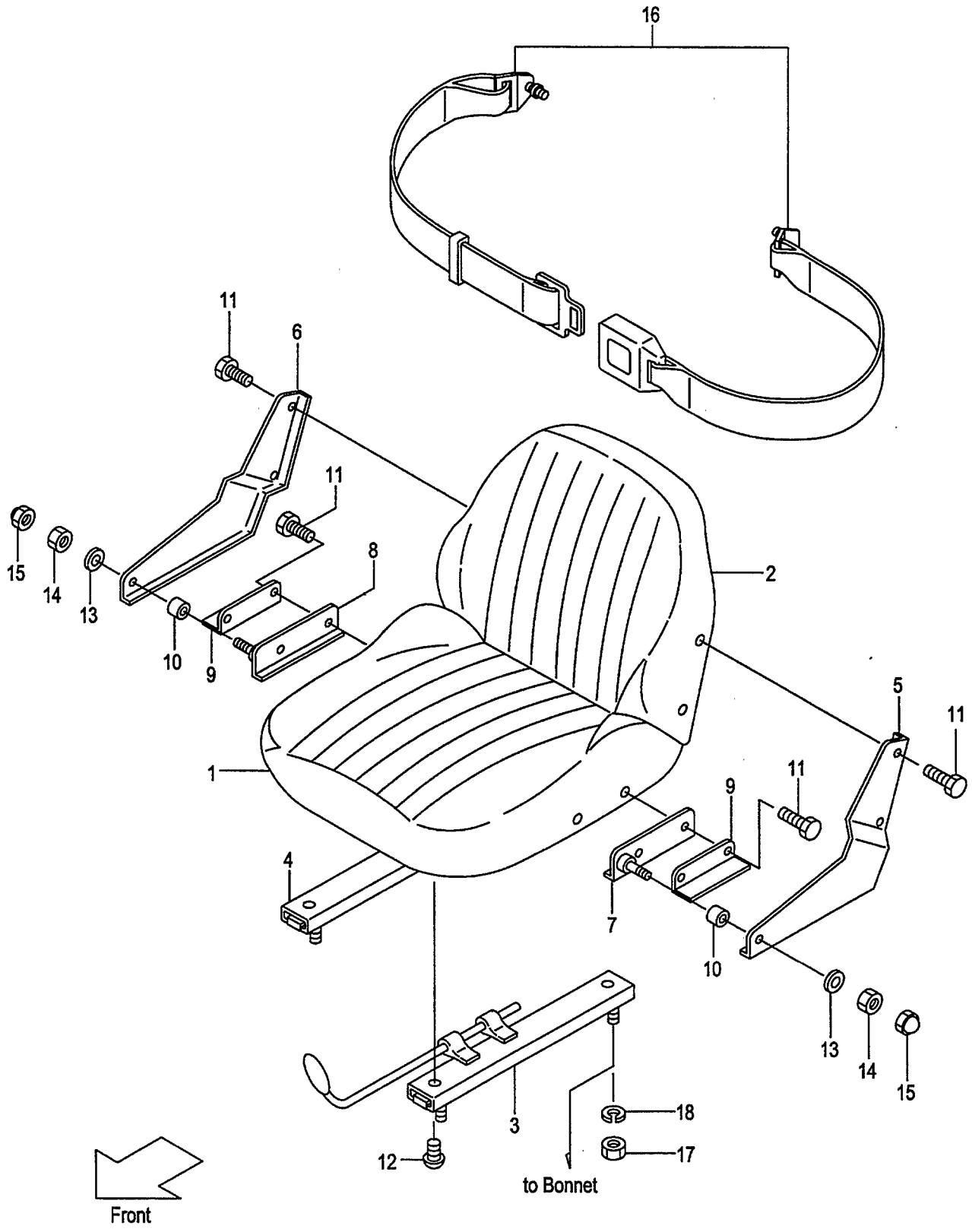

FIG.146
(F6036840)

A:FD30C7 FD30T7 FD30W7

Item No	Part No.	Mark	Description		Req'd	Remarks : Serial No.
A1	24846-80302		SEAT-ASSY	ｼｰﾄｱｯｾﾝ	1	[RW] INC.1-15
1	23656-83001		CUSHION,SEAT	ｸｯｼｮﾝ	1	[RW]
2	23656-83011		BACK,SEAT	ﾊﾞｯｸ	1	[RW]
3	NO PART NO.	#	ADJUSTER,SEAT	ｱｼﾞｬｽﾀ	1	[RW]
4	NO PART NO.	#	ADJUSTER,SEAT	ｱｼﾞｬｽﾀ	1	[RW]
5	24846-82001		PLATE,SIDE,LH	ﾌﾟﾚｰﾄ	1	[RW]
6	24846-82011		PLATE,SIDE,RH	ﾌﾟﾚｰﾄ	1	[RW]
7	24846-82021		BRACKET,HINGE,LH	ﾌﾞﾗｹｯﾄ	1	[RW]
8	24846-82031		BRACKET,HINGE,RH	ﾌﾞﾗｹｯﾄ	1	[RW]
9	24846-82041		BRACKET	ﾌﾞﾗｹｯﾄ	2	[RW]
10	23655-22101		BUSHING	ﾌﾞｯｼﾝｸﾞ	2	[RW]
11	23656-83051		BOLT	ﾎﾞﾙﾄ	8	[RW]
12	23656-83061		SCREW	ｽｸﾘｭ	4	[RW]
13	02000-00010		WASHER	ﾜｯｼｬ	2	[RW]
14	01402-00010		NUT	ﾅｯﾄ	2	[RW]
15	24846-82051		NUT,CAP	ﾅｯﾄ	2	[RW]
16	514T6-42001		BELT,SEAT	ﾍﾞﾙﾄ	1	[RW]
17	01400-00008		NUT	ﾅｯﾄ	4	[RW]
18	02010-00008		WASHER	ﾜｯｼｬ	4	[RW]

FIG.147 SEAT [SETDX1]

(F6036850) シート

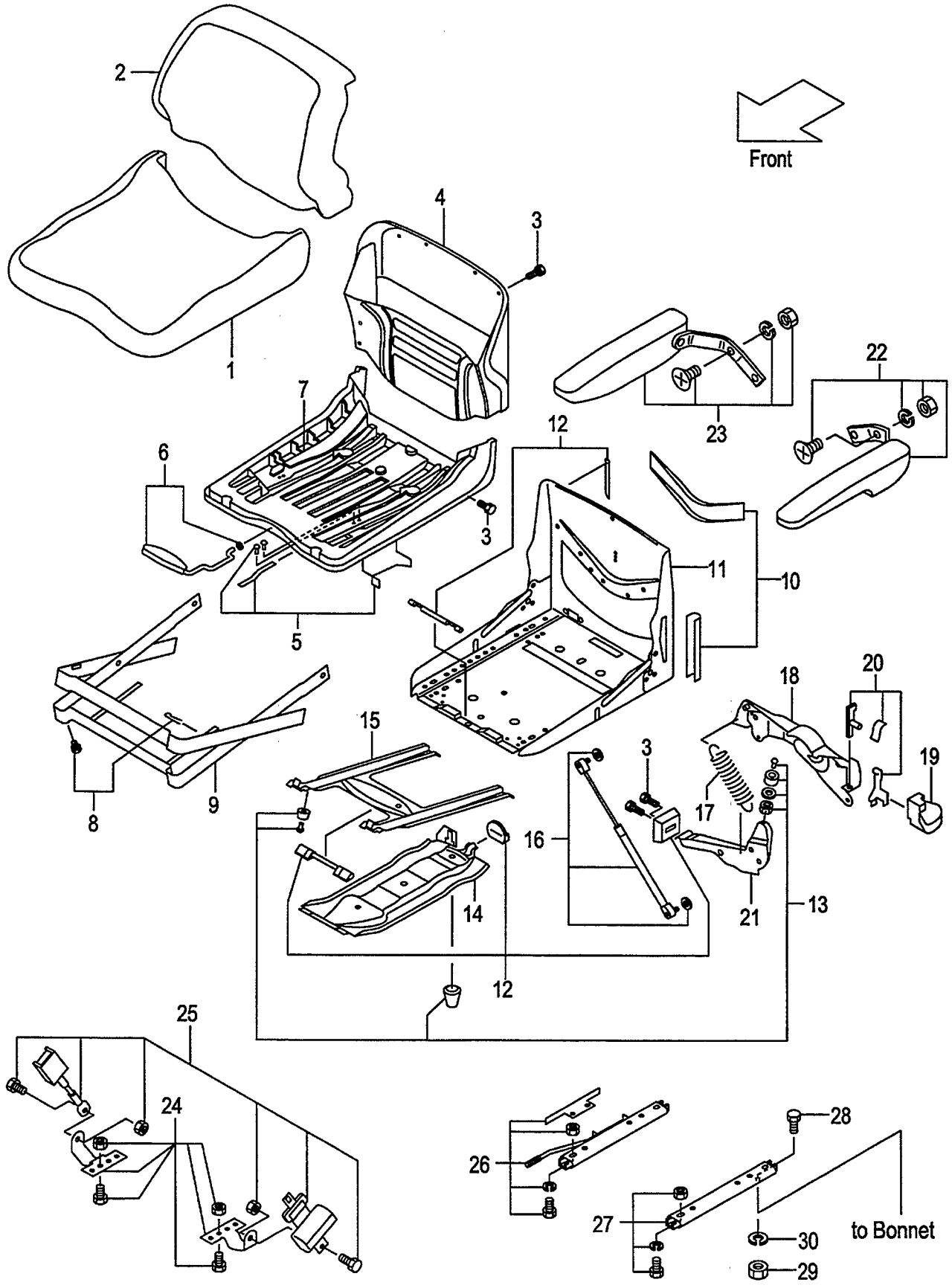

A:FD30C7 FD30T7 FD30W7

Item No	Part No.	Mark	Description		Req'd	Remarks : Serial No.
A1	534A6-42001		SEAT-ASSY	ｼｰﾄｱｯｾﾝ	1	[SETDX1] INC.1-25
1	534A6-42201		CUSHION,SEAT	ｸｯｼｮﾝ	1	[SETDX1]
2	534A6-42211		CUSHION,BACKREST	ｸｯｼｮﾝ	1	[SETDX1]
3	534A6-42221		FIXTURE	ﾌｨｸｽﾁｬ	3	[SETDX1]
4	534A6-42231		PLATE,BACKREST	ﾌﾟﾚｰﾄ	1	[SETDX1]
5	534A6-42241		SET,SPRING	ｽﾌﾟﾘﾝｸﾞｾｯﾄ	1	[SETDX1]
6	534A6-42251		LEVER,RECLINING	ﾚﾊﾞｰ	1	[SETDX1]
7	534A6-42261		PLATE,SEAT	ﾌﾟﾚｰﾄ	1	[SETDX1]
8	534A6-42271		FIXTURE,COVER	ﾌｨｸｽﾁｬ	1	[SETDX1]
9	534A6-42281		COVER	ｶﾊﾞｰ	1	[SETDX1]
10	534A6-42291		FIXTURE,SEAT-FRAME	ﾌｨｸｽﾁｬ	1	[SETDX1]
11	534A6-42301		FRAME,SEAT	ﾌﾚｰﾑ	1	[SETDX1]
12	534A6-42311		SET,CONSUMABLES	ｺﾝｼｭｰﾏﾌﾞﾙｾｯﾄ	1	[SETDX1]
13	534A6-42321		KIT,CUSHION	ｸｯｼｮﾝｷｯﾄ	1	[SETDX1]
14	534A6-42331		SPRING,INNER	ｽﾌﾟﾘﾝｸﾞ	1	[SETDX1]
15	534A6-42341		SPRING,OUTER	ｽﾌﾟﾘﾝｸﾞ	1	[SETDX1]
16	534A6-42351		ABSORBER,SHOCK	ｱﾌﾞｿｰﾊﾞ	1	[SETDX1]
17	534A6-42361		SPRING,TENSION	ｽﾌﾟﾘﾝｸﾞ	1	[SETDX1]
18	534A6-42371		COVER	ｶﾊﾞｰ	1	[SETDX1]
19	534A6-42381		HANDLE	ﾊﾝﾄﾞﾙ	1	[SETDX1]
20	534A6-42391		SET,HANDLE	ﾊﾝﾄﾞﾙｾｯﾄ	1	[SETDX1]
21	534A6-42401		SET,LEVER	ﾚﾊﾞｰｾｯﾄ	1	[SETDX1]
22	534A6-42411		REST,ARM,LH	ﾚｽﾄ	1	[SETDX1]
23	534A6-42421		REST,ARM,RH	ﾚｽﾄ	1	[SETDX1]
A2	534A6-42451		BELT-ASSY,SEAT	ﾍﾞﾙﾄｱｯｾﾝ	1	[SETDX1] INC.24,25
24	534A6-42431		SET,BELT-BRACKET	ﾍﾞﾙﾄﾌﾞﾗｹｯﾄｾｯﾄ	1	[SETDX1]
25	534A6-42441		SET,SEAT-BELT	ｼｰﾄﾍﾞﾙﾄｾｯﾄ	1	[SETDX1]
26	534A6-42472		RAIL	ﾚｰﾙ	1	[SETDX1]
27	534A6-42482		RAIL,LOCK	ﾚｰﾙ	1	[SETDX1]
28	01100-08020		BOLT	ﾎﾞﾙﾄ	4	[SETDX1]
29	01400-00008		NUT	ﾅｯﾄ	4	[SETDX1]
30	02010-00008		WASHER	ﾜｯｼｬ	4	[SETDX1]

FIG.148 PUMP UNIT (CLUTCH)(TOR-CON)

(F6037120) ﾎﾟﾝﾌﾟﾕﾆｯﾄ

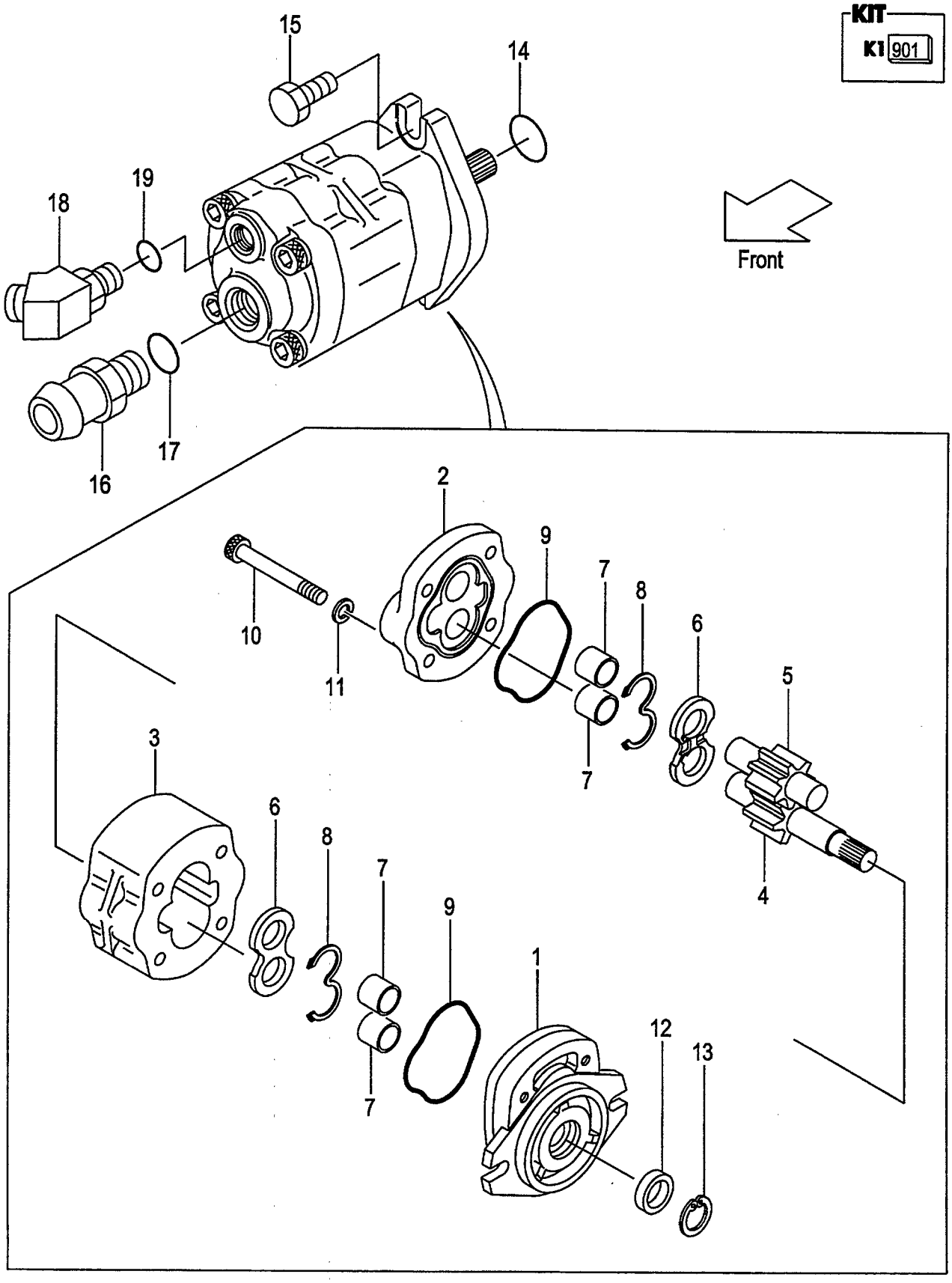

A:FD30C7 FD30T7

Item No	Part No.	Mark	Description		Req'd	Remarks : Serial No.
A1	134A7-10301		PUMP-ASSY,GEAR	ｷﾞﾔｰﾎﾟﾝﾌﾟｱｯｾﾝ	1	INC.1-13
901	110F7-12001	K1	KIT,REPAIR	ﾘﾍﾟｱｷｯﾄ	1	INC.8,9,12,13
1	NO PART NO.	#	COVER,FRONT	ｶﾊﾞｰ	1	
2	NO PART NO.	#	COVER,REAR	ｶﾊﾞｰ	1	
3	NO PART NO.	#	BODY	ﾎﾞﾃﾞｨ	1	
4	NO PART NO.	#	GEAR,DRIVE	ｷﾞﾔｰ	1	
5	NO PART NO.	#	GEAR,DRIVEN	ｷﾞﾔｰ	1	
6	NO PART NO.	#	PLATE,SIDE	ﾌﾟﾚｰﾄ	2	
7	NO PART NO.	#	BUSHING	ﾌﾞｯｼﾝｸﾞ	4	
8	NO PART NO.	#*	GASKET	ｶﾞｽｹｯﾄ	2	
9	NO PART NO.	#*	GASKET	ｶﾞｽｹｯﾄ	2	
10	R-402-65004-03		BOLT	ﾎﾞﾙﾄ	4	
11	R-402-00710-12		WASHER	ﾜｯｼｬ	4	
12	NO PART NO.	#*	SEAL,OIL	ｼｰﾙ	1	
13	NO PART NO.	#*	RING,SNAP	ｽﾅｯﾌﾟﾘﾝｸﾞ	1	
14	03340-00140		O-RING	Oﾘﾝｸﾞ	1	
15	01185-10055		BOLT	ﾎﾞﾙﾄ	2	
A2	225A7-62021		NIPPLE-ASSY	ﾆｯﾌﾟﾙｱｯｾﾝ	1	INC.16,17
16	NO PART NO.	#	NIPPLE	ﾆｯﾌﾟﾙ	1	
17	03320-00290		O-RING	Oﾘﾝｸﾞ	1	
A3	271A7-60351		ADAPTER-ASSY	ｱﾀﾞﾌﾟﾀｱｯｾﾝ	1	INC.18,19
18	NO PART NO.	#	ADAPTER	ｱﾀﾞﾌﾟﾀ	1	
19	03320-00180		O-RING	Oﾘﾝｸﾞ	1	

FIG.149 PUMP UNIT (OIL CLUTCH)

(F6037150) ﾎﾟﾝﾌﾟﾕﾆｯﾄ

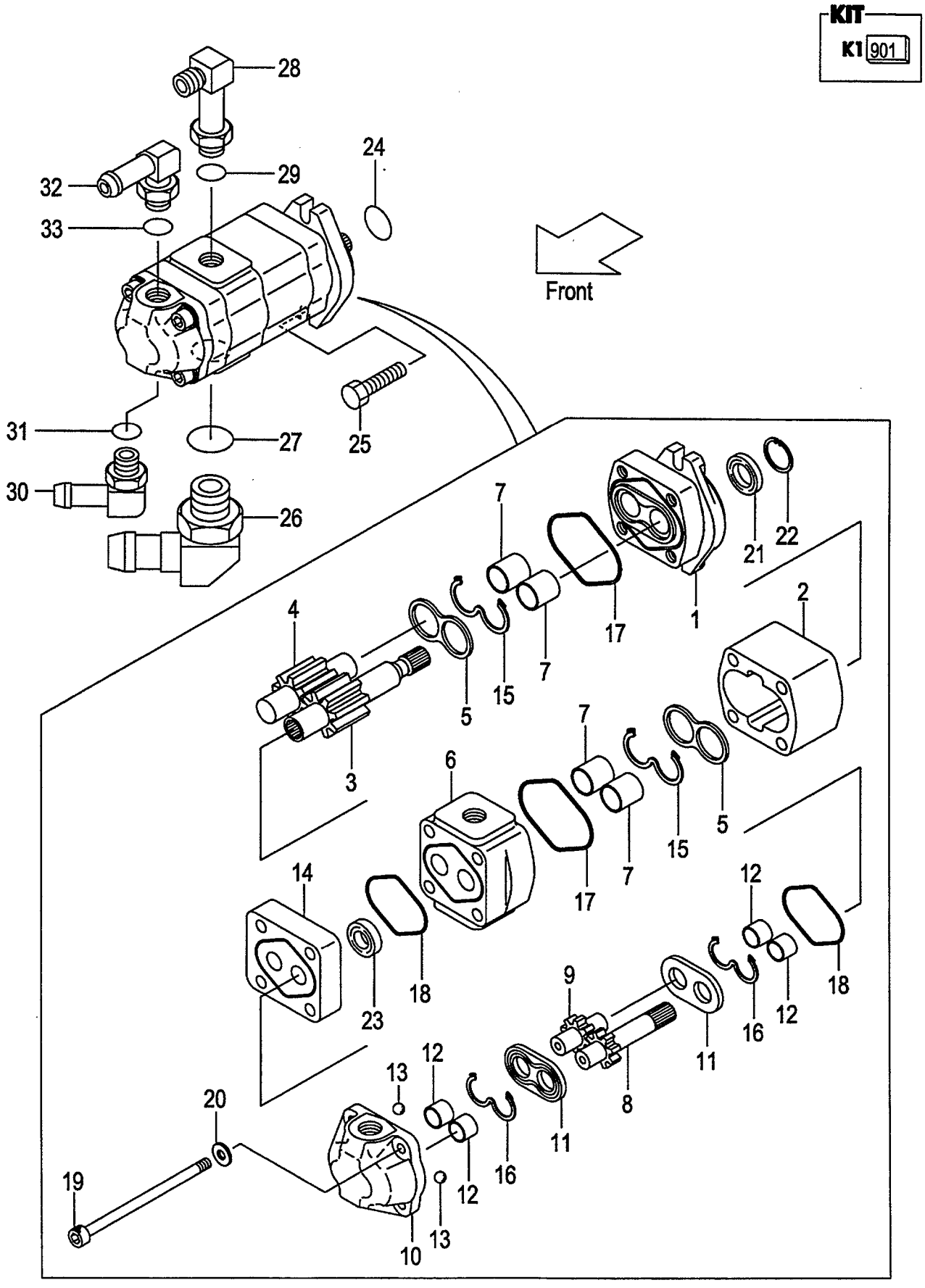

A:FD30W7

Item No	Part No.	Mark	Description		Req'd	Remarks : Serial No.
A1	134H7-10301		PUMP-ASSY,GEAR	ｷﾞﾔｰﾎﾟﾝﾌﾟｱｯｾﾝ	1	INC.1-23
901	R-403-24323	K1	KIT,SEAL	ｼｰﾙｷｯﾄ	1	INC.15-18,21,23
1	NO PART NO.	#	COVER,FRONT	ｶﾊﾞｰ	1	
2	NO PART NO.	#	BODY,1	ﾎﾞﾃﾞｨ	1	
3	NO PART NO.	#	GEAR,DRIVE,1	ｷﾞﾔｰ	1	
4	NO PART NO.	#	GEAR,DRIVEN,1	ｷﾞﾔｰ	1	
5	NO PART NO.	#	PLATE,SIDE,1	ﾌﾟﾚｰﾄ	2	
6	NO PART NO.	#	PLATE,ADAPTER	ﾌﾟﾚｰﾄ	1	
7	NO PART NO.	#	BUSHING,1	ﾌﾞｯｼﾝｸﾞ	4	
8	NO PART NO.	#	GEAR,DRIVE,2	ｷﾞﾔｰ	1	
9	NO PART NO.	#	GEAR,DRIVEN,2	ｷﾞﾔｰ	1	
10	NO PART NO.	#	BODY,2	ﾎﾞﾃﾞｨ	1	
11	NO PART NO.	#	PLATE,SIDE,2	ﾌﾟﾚｰﾄ	2	
12	NO PART NO.	#	BUSHING,2	ﾌﾞｯｼﾝｸﾞ	4	
13	NO PART NO.	#	BALL,STEEL	ﾎﾞｰﾙ	2	
14	NO PART NO.	#	SUB-PLATE,ADAPTER	ｻﾌﾞﾌﾟﾚｰﾄ	1	
15	NO PART NO.	#*	GASKET,1	ｶﾞｽｹｯﾄ	2	
16	NO PART NO.	#*	GASKET,2	ｶﾞｽｹｯﾄ	2	
17	NO PART NO.	#*	GASKET,1	ｶﾞｽｹｯﾄ	2	
18	NO PART NO.	#*	GASKET,2	ｶﾞｽｹｯﾄ	2	
19	R-402-65004-28		BOLT	ﾎﾞﾙﾄ	4	
20	R-402-00710-12		WASHER	ﾜｯｼｬ	4	
21	NO PART NO.	#*	SEAL,OIL	ｼｰﾙ	1	
22	NO PART NO.	#	RING,SNAP	ｽﾅｯﾌﾟﾘﾝｸﾞ	1	
23	NO PART NO.	#*	SEAL,OIL	ｼｰﾙ	1	
24	03340-00140		O-RING	Oﾘﾝｸﾞ	1	
25	01185-10055		BOLT	ﾎﾞﾙﾄ	2	
A2	239H7-60201		ELBOW-ASSY	ｴﾙﾎﾞｱｯｾﾝ	1	INC.26,27
26	NO PART NO.	#	ELBOW	ｴﾙﾎﾞ	1	
27	03320-00290		O-RING	Oﾘﾝｸﾞ	1	
A3	04150-20404		ELBOW-ASSY	ｴﾙﾎﾞｱｯｾﾝ	1	INC.28,29
28	NO PART NO.	#	ELBOW	ｴﾙﾎﾞ	1	
29	03320-00180		O-RING	Oﾘﾝｸﾞ	1	
A4	234H7-62351		FITTING-ASSY,HOSE	ﾎｰｽﾌｨｯﾃｨﾝｸﾞｱｯｾﾝ	1	INC.30,31
30	NO PART NO.	#	FITTING,HOSE	ﾌｨｯﾃｨﾝｸﾞ	1	
31	03320-00180		O-RING	Oﾘﾝｸﾞ	1	
A5	234H7-62301		FITTING-ASSY,HOSE	ﾎｰｽﾌｨｯﾃｨﾝｸﾞｱｯｾﾝ	1	INC.32,33
32	NO PART NO.	#	FITTING,HOSE	ﾌｨｯﾃｨﾝｸﾞ	1	
33	03320-00180		O-RING	Oﾘﾝｸﾞ	1	

FIG.150 CONTROL VALVE [2SV]

(F6037310) コントロールバルブ

KIT
K1 901

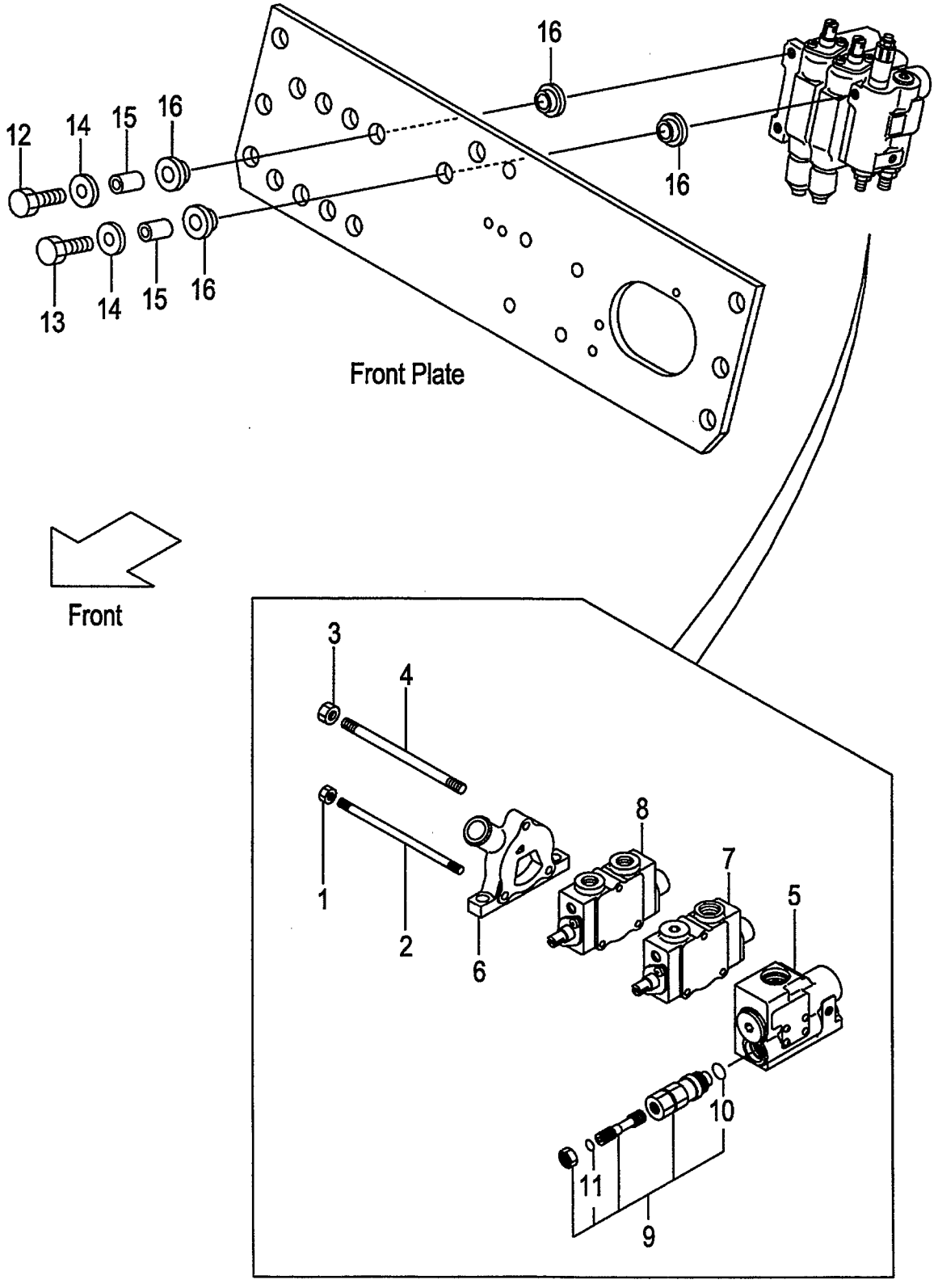

A:FD30C7 FD30T7
B:FD30W7

FIG.150
(F6037310)

Item No	Part No.	Mark	Description		Req'd	Remarks : Serial No.
A1	234A7-30202		VALVE-ASSY,CONTROL	ｺﾝﾄﾛｰﾙﾊﾞﾙﾌﾞｱｯｾﾝ	1	INC.1-11
-	534A2-40402		VALVE-ASSY,CONTROL	ｺﾝﾄﾛｰﾙﾊﾞﾙﾌﾞｱｯｾﾝ	1	A [EXC][EXE][EXK][EXN][OBT] [EXB/OBT] INC.1-11
-	534A4-60202		VALVE-ASSY,CONTROL	ｺﾝﾄﾛｰﾙﾊﾞﾙﾌﾞｱｯｾﾝ	1	[VLS]
901	B-2101A-30016	K1	KIT,SEAL	ｼｰﾙｷｯﾄ	1	INC.10,11
1	B-93118-08652		NUT	ﾅｯﾄ	2	
2	B-21011-31106		ROD,TIE	ﾛｯﾄﾞ	2	
3	B-93128-10082		NUT	ﾅｯﾄ	1	
4	B-21011-31105		ROD,TIE	ﾛｯﾄﾞ	1	
5	B-21013-37344		SECTION,INLET	ｲﾝﾚｯﾄｾｸｼｮﾝ	1	SEE FIG.154
-	B-21013-37349		SECTION,INLET	ｲﾝﾚｯﾄｾｸｼｮﾝ	1	A [EXC][EXE][EXK][EXN][OBT] [EXB/OBT]SEE FIG.154
6	B-21011-30134		SECTION,OUTLET	ｱｳﾄﾚｯﾄｾｸｼｮﾝ	1	
7	B-21013-36432		SECTION,SPOOL	ｽﾌﾟｰﾙｾｸｼｮﾝ	1	(LIFT)SEE FIG.155
8	B-21013-36433		SECTION,SPOOL	ｽﾌﾟｰﾙｾｸｼｮﾝ	1	(TILT)SEE FIG.156
9	63130-25614		VALVE,MAIN-RELIEF	ﾊﾞﾙﾌﾞ	1	INC.10,11
10	NO PART NO.	#*	O-RING	Oﾘﾝｸﾞ	1	
11	NO PART NO.	#*	O-RING	Oﾘﾝｸﾞ	1	
12	216G7-32041		BOLT	ﾎﾞﾙﾄ	2	
13	234A7-32001		BOLT	ﾎﾞﾙﾄ	1	
14	216G7-32021		WASHER,PLANE	ﾜｯｼｬ	3	
15	216G7-32011		COLLAR	ｶﾗｰ	3	
16	216G7-32001		RUBBER,VALVE	ﾗﾊﾞｰ	6	

FIG.151 CONTROL VALVE [3SV]

(F6037320) コントロールバルブ

KIT

K1 901

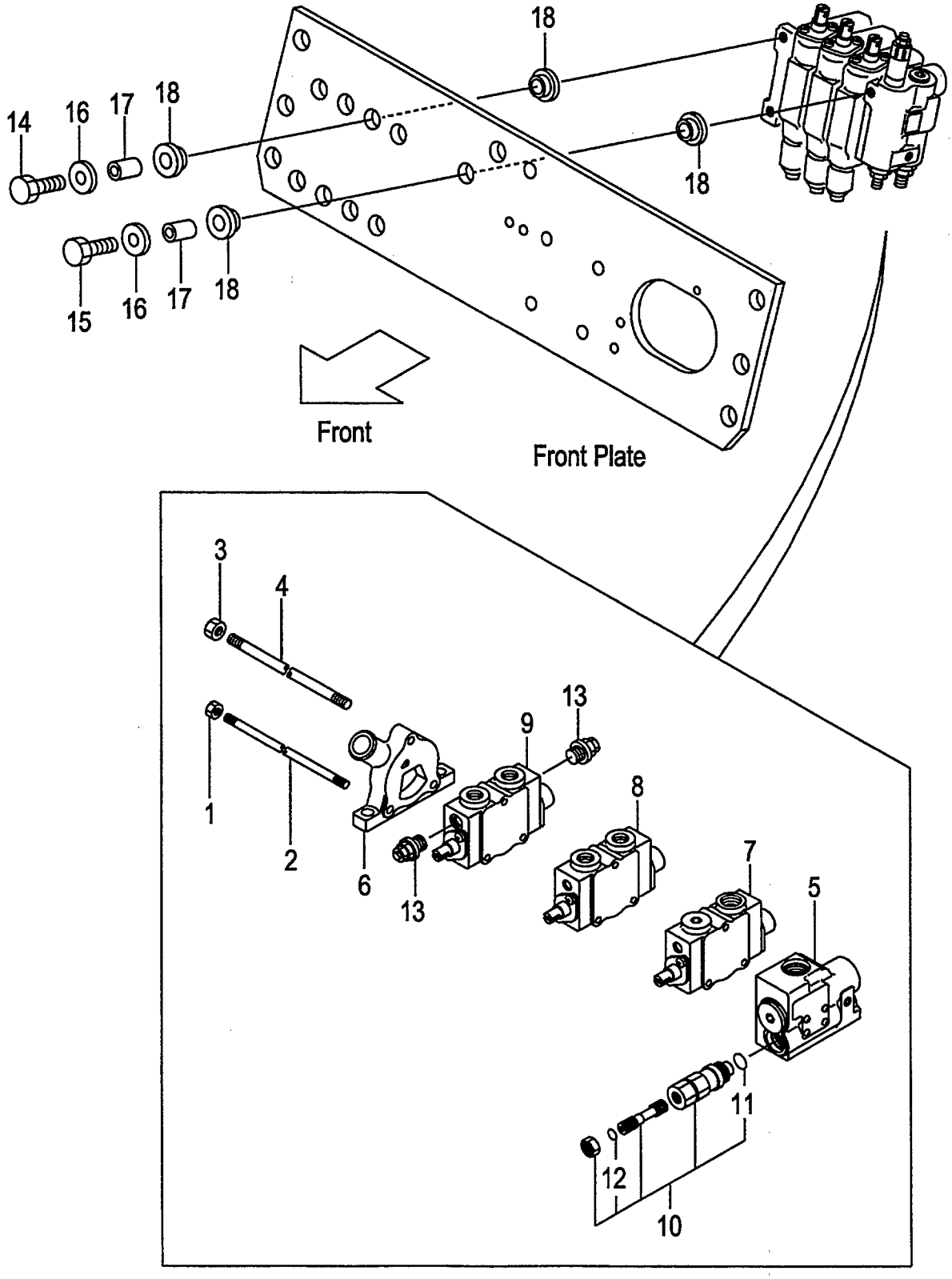

A:FD30C7 FD30T7
B:FD30W7

FIG.151
(F6037320)

Item No	Part No.	Mark	Description		Req'd	Remarks : Serial No.
A1	234A7-30302		VALVE-ASSY,CONTROL	ｺﾝﾄﾛｰﾙﾊﾞﾙﾌﾞｱｯｾﾝ	1	[3SV] INC.1-13
-	534A2-40502		VALVE-ASSY,CONTROL	ｺﾝﾄﾛｰﾙﾊﾞﾙﾌﾞｱｯｾﾝ	1	A [3SV/EXC&E&K&N][3SV/OBT] INC.1-13
-	534A2-40502		VALVE-ASSY,CONTROL	ｺﾝﾄﾛｰﾙﾊﾞﾙﾌﾞｱｯｾﾝ	1	A [3SV/EXB/OBT] INC.1-13
-	534A4-60302		VALVE-ASSY,CONTROL	ｺﾝﾄﾛｰﾙﾊﾞﾙﾌﾞｱｯｾﾝ	1	[3SV/VLS]
901	B-2101A-30016	K1	KIT,SEAL	ｼｰﾙｷｯﾄ	1	[3SV] INC.11,12
1	B-93118-08652		NUT	ﾅｯﾄ	2	[3SV]
2	B-21021-30104		ROD,TIE	ﾛｯﾄﾞ	2	[3SV]
3	B-93128-10082		NUT	ﾅｯﾄ	1	[3SV]
4	B-21021-30103		ROD,TIE	ﾛｯﾄﾞ	1	[3SV]
5	B-21013-37344		SECTION,INLET	ｲﾝﾚｯﾄｾｸｼｮﾝ	1	[3SV]SEE FIG.154
-	B-21013-37349		SECTION,INLET	ｲﾝﾚｯﾄｾｸｼｮﾝ	1	A [3SV/EXC&E&K&N][3SV/OBT] SEE FIG.154
-	B-21013-37349		SECTION,INLET	ｲﾝﾚｯﾄｾｸｼｮﾝ	1	A [3SV/EXB/OBT]SEE FIG.154
6	B-21011-30134		SECTION,OUTLET	ｱｳﾄﾚｯﾄｾｸｼｮﾝ	1	[3SV]
7	B-21013-36432		SECTION,SPOOL	ｽﾌﾟｰﾙｾｸｼｮﾝ	1	[3SV](LIFT)SEE FIG.155
8	B-21013-36433		SECTION,SPOOL	ｽﾌﾟｰﾙｾｸｼｮﾝ	1	[3SV](TILT)SEE FIG.156
9	B-21013-39701		SECTION,SPOOL	ｽﾌﾟｰﾙｾｸｼｮﾝ	1	[3SV](3RD)SEE FIG.157
10	63130-25614		VALVE,MAIN-RELIEF	ﾊﾞﾙﾌﾞ	1	[3SV] INC.11,12
11	NO PART NO.	#*	O-RING	Oﾘﾝｸﾞ	1	[3SV]
12	NO PART NO.	#*	O-RING	Oﾘﾝｸﾞ	1	[3SV]
13	B-C0003-30301		VALVE,SHUT-OFF	ﾊﾞﾙﾌﾞ	2	[3SV]
14	216G7-32041		BOLT	ﾎﾞﾙﾄ	2	[3SV]
15	234A7-32001		BOLT	ﾎﾞﾙﾄ	1	[3SV]
16	216G7-32021		WASHER,PLANE	ﾜｯｼｬ	3	[3SV]
17	216G7-32011		COLLAR	ｶﾗｰ	3	[3SV]
18	216G7-32001		RUBBER,VALVE	ﾗﾊﾞｰ	6	[3SV]

FIG.152 CONTROL VALVE [4SV]

(F6037330) コントロールバルブ

KIT
K1 901

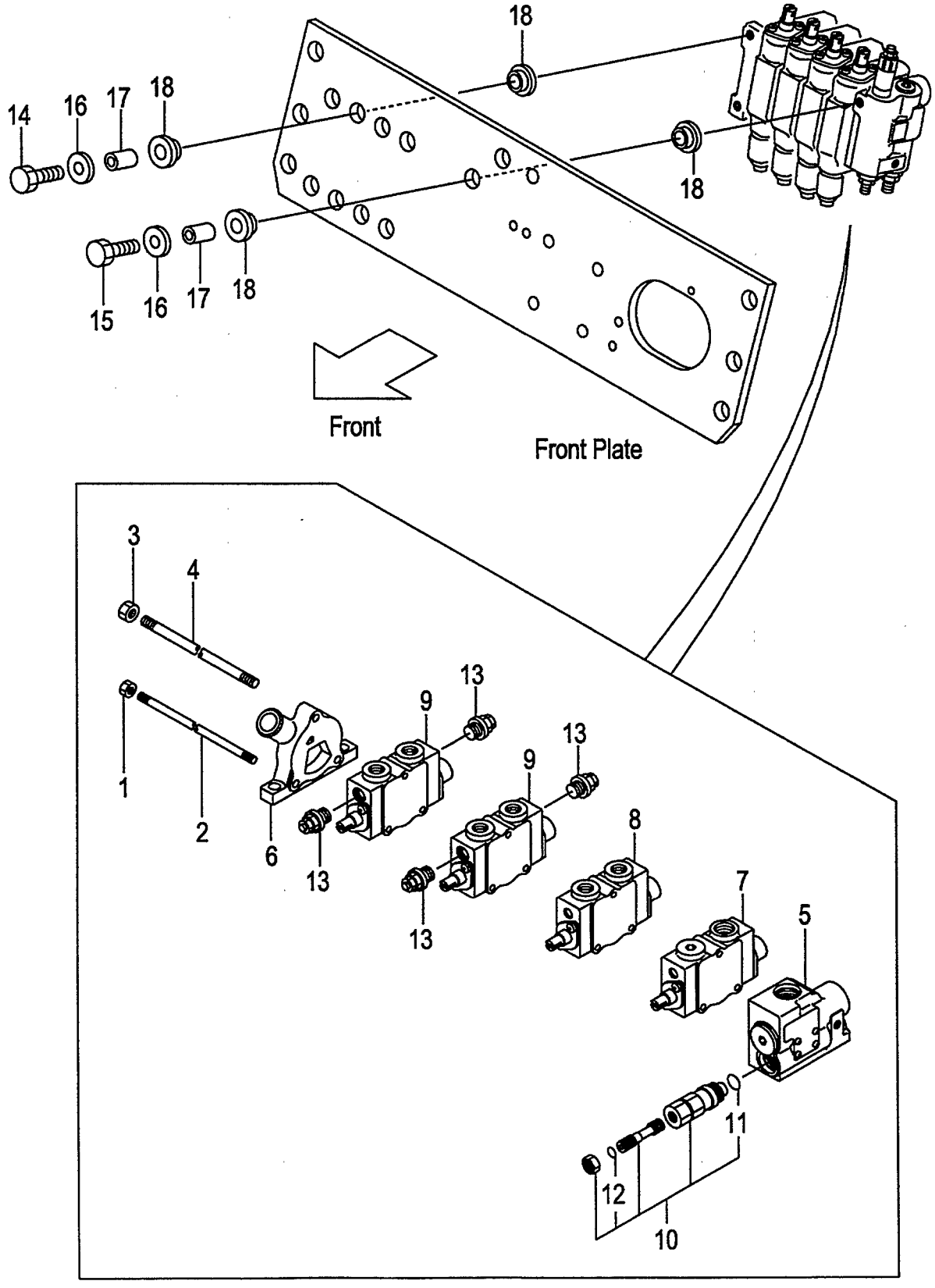

A:FD30C7 FD30T7
B:FD30W7

FIG.152
(F6037330)

Item No	Part No.	Mark	Description		Req'd	Remarks : Serial No.
A1	234A7-30402		VALVE-ASSY,CONTROL	ｺﾝﾄﾛｰﾙﾊﾞﾙﾌﾞｱｯｾﾝ	1	[4SV] INC.1-13
-	534A2-40602		VALVE-ASSY,CONTROL	ｺﾝﾄﾛｰﾙﾊﾞﾙﾌﾞｱｯｾﾝ	1	A [4SV/EXC&E&K&N][4SV/OBT] INC.1-13
-	534A2-40602		VALVE-ASSY,CONTROL	ｺﾝﾄﾛｰﾙﾊﾞﾙﾌﾞｱｯｾﾝ	1	A [4SV/EXB/OBT] INC.1-13
-	534A4-60402		VALVE-ASSY,CONTROL	ｺﾝﾄﾛｰﾙﾊﾞﾙﾌﾞｱｯｾﾝ	1	[4SV/VLS]
901	B-2101A-30016	K1	KIT,SEAL	ｼｰﾙｷｯﾄ	1	[4SV] INC.11,12
1	B-93118-08652		NUT	ﾅｯﾄ	2	[4SV]
2	B-21031-30104		ROD,TIE	ﾛｯﾄﾞ	2	[4SV]
3	B-93128-10082		NUT	ﾅｯﾄ	1	[4SV]
4	B-21031-30103		ROD,TIE	ﾛｯﾄﾞ	1	[4SV]
5	B-21013-37344		SECTION,INLET	ｲﾝﾚｯﾄｾｸｼｮﾝ	1	[4SV]SEE FIG.154
-	B-21013-37349		SECTION,INLET	ｲﾝﾚｯﾄｾｸｼｮﾝ	1	A [4SV/EXC&E&K&N][4SV/OBT] SEE FIG.154
-	B-21013-37349		SECTION,INLET	ｲﾝﾚｯﾄｾｸｼｮﾝ	1	A [4SV/EXB/OBT]SEE FIG.154
6	B-21011-30134		SECTION,OUTLET	ｱｳﾄﾚｯﾄｾｸｼｮﾝ	1	[4SV]
7	B-21013-36432		SECTION,SPOOL	ｽﾌﾟｰﾙｾｸｼｮﾝ	1	[4SV](LIFT)SEE FIG.155
8	B-21013-36433		SECTION,SPOOL	ｽﾌﾟｰﾙｾｸｼｮﾝ	1	[4SV](TILT)SEE FIG.156
9	B-21013-39701		SECTION,SPOOL	ｽﾌﾟｰﾙｾｸｼｮﾝ	2	[4SV](3RD,4TH)SEE FIG.157
10	63130-25614		VALVE,MAIN-RELIEF	ﾊﾞﾙﾌﾞ	1	[4SV] INC.11,12
11	NO PART NO.	**	O-RING	Oﾘﾝｸﾞ	1	[4SV]
12	NO PART NO.	**	O-RING	Oﾘﾝｸﾞ	1	[4SV]
13	B-C0003-30301		VALVE,SHUT-OFF	ﾊﾞﾙﾌﾞ	4	[4SV]
14	216G7-32041		BOLT	ﾎﾞﾙﾄ	2	[4SV]
15	234A7-32001		BOLT	ﾎﾞﾙﾄ	1	[4SV]
16	216G7-32021		WASHER,PLANE	ﾜｯｼｬ	3	[4SV]
17	216G7-32011		COLLAR	ｶﾗｰ	3	[4SV]
18	216G7-32001		RUBBER,VALVE	ﾗﾊﾞｰ	6	[4SV]

FIG.153 CONTROL VALVE [5SV]

(F6037340) コントロールバルブ

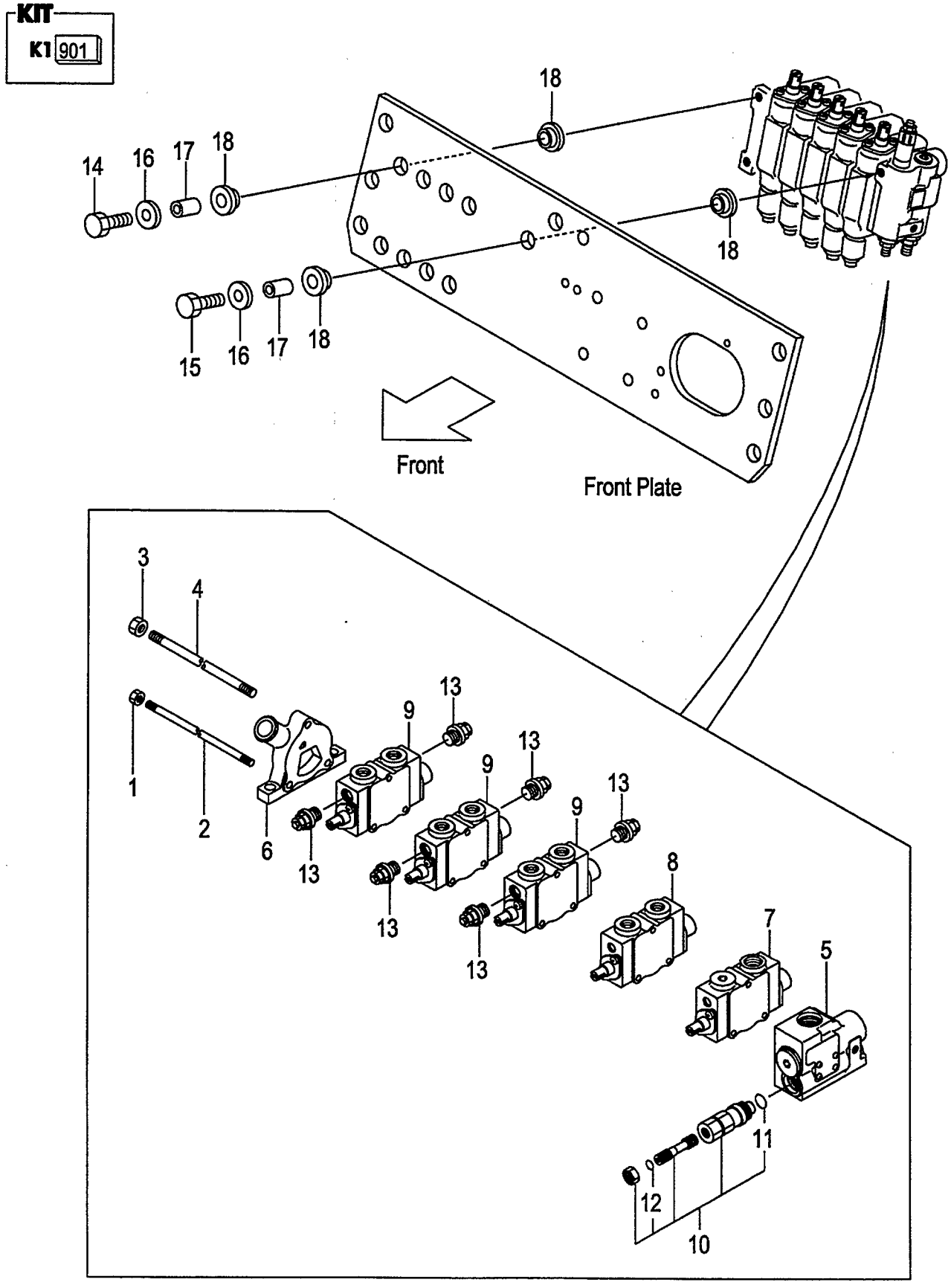

A:FD30C7 FD30T7
B:FD30W7

FIG.153
(F6037340)

Item No	Part No.	Mark	Description		Req'd	Remarks : Serial No.
A1	234A7-30502		VALVE-ASSY,CONTROL	ｺﾝﾄﾛｰﾙﾊﾞﾙﾌﾞｱｯｾﾝ	1	[5SV] INC.1-13
-	534A2-40702		VALVE-ASSY,CONTROL	ｺﾝﾄﾛｰﾙﾊﾞﾙﾌﾞｱｯｾﾝ	1	A [5SV/EXC&E&K&N][5SV/OBT] INC.1-13
-	534A2-40702		VALVE-ASSY,CONTROL	ｺﾝﾄﾛｰﾙﾊﾞﾙﾌﾞｱｯｾﾝ	1	A [5SV/EXB/OBT] INC.1-13
-	534A4-60502		VALVE-ASSY,CONTROL	ｺﾝﾄﾛｰﾙﾊﾞﾙﾌﾞｱｯｾﾝ	1	[5SV/VLS]
901	B-2101A-30016	K1	KIT,SEAL	ｼｰﾙｷｯﾄ	1	[5SV] INC.11,12
1	B-93118-08652		NUT	ﾅｯﾄ	2	[5SV]
2	B-21041-30104		ROD,TIE	ﾛｯﾄﾞ	2	[5SV]
3	B-93128-10082		NUT	ﾅｯﾄ	1	[5SV]
4	B-21041-30103		ROD,TIE	ﾛｯﾄﾞ	1	[5SV]
5	B-21013-37344		SECTION,INLET	ｲﾝﾚｯﾄｾｸｼｮﾝ	1	[5SV]SEE FIG.154
-	B-21013-37349		SECTION,INLET	ｲﾝﾚｯﾄｾｸｼｮﾝ	1	A [5SV/EXC&E&K&N][5SV/OBT] SEE FIG.154
-	B-21013-37349		SECTION,INLET	ｲﾝﾚｯﾄｾｸｼｮﾝ	1	A [5SV/EXB/OBT]SEE FIG.154
6	B-21011-30134		SECTION,OUTLET	ｱｳﾄﾚｯﾄｾｸｼｮﾝ	1	[5SV]
7	B-21013-36432		SECTION,SPOOL	ｽﾌﾟｰﾙｾｸｼｮﾝ	1	[5SV](LIFT)SEE FIG.155
8	B-21013-36433		SECTION,SPOOL	ｽﾌﾟｰﾙｾｸｼｮﾝ	1	[5SV](TILT)SEE FIG.156
9	B-21013-39701		SECTION,SPOOL	ｽﾌﾟｰﾙｾｸｼｮﾝ	3	[5SV](3RD,4TH,5TH)SEE FIG.157
10	63130-25614		VALVE,MAIN-RELIEF	ﾊﾞﾙﾌﾞ	1	[5SV] INC.11,12
11	NO PART NO.	#*	O-RING	Oﾘﾝｸﾞ	1	[5SV]
12	NO PART NO.	#*	O-RING	Oﾘﾝｸﾞ	1	[5SV]
13	B-C0003-30301		VALVE,SHUT-OFF	ﾊﾞﾙﾌﾞ	6	[5SV]
14	216G7-32041		BOLT	ﾎﾞﾙﾄ	2	[5SV]
15	234A7-32001		BOLT	ﾎﾞﾙﾄ	1	[5SV]
16	216G7-32021		WASHER,PLANE	ﾜｯｼｬ	3	[5SV]
17	216G7-32011		COLLAR	ｶﾗｰ	3	[5SV]
18	216G7-32001		RUBBER,VALVE	ﾗﾊﾞｰ	6	[5SV]

FIG.154 INLET SECTION
(F6037350) インレットセクション

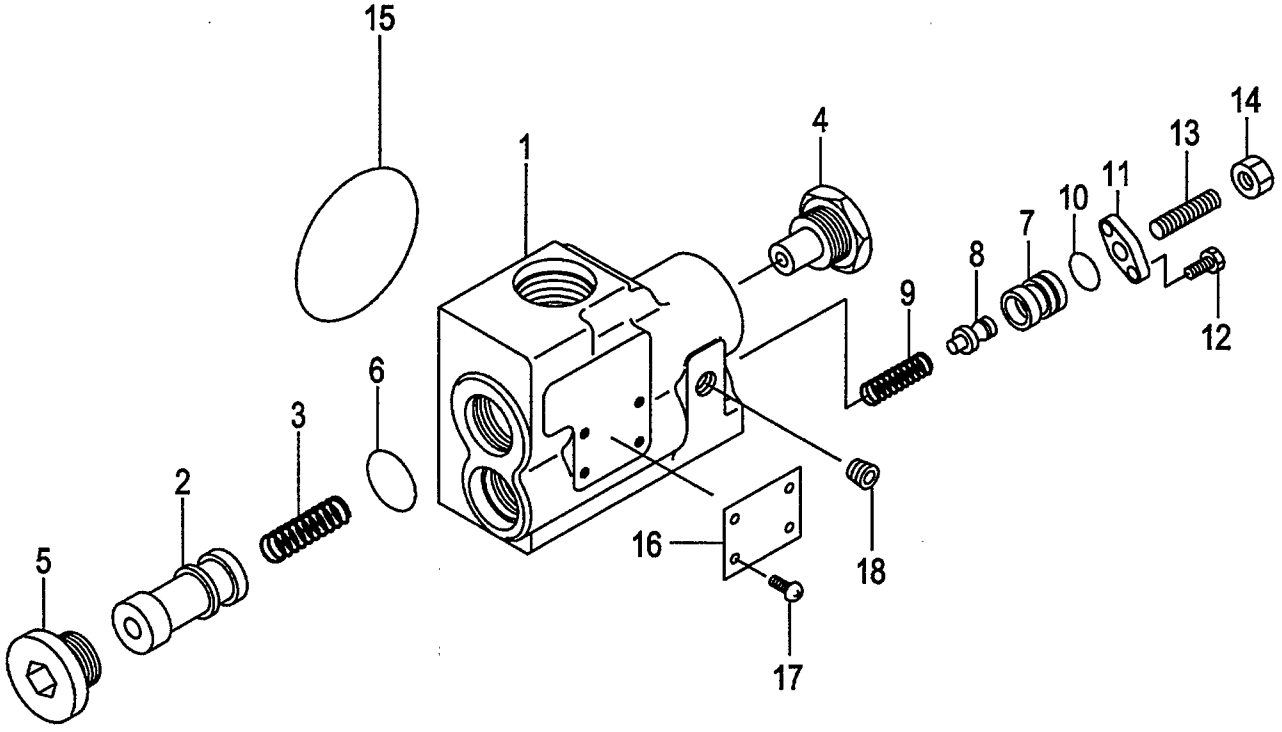

A:FD30C7 FD30T7
B:FD30W7

FIG.154
(F6037350)

Item No	Part No.	Mark	Description		Req'd	Remarks : Serial No.
A1	B-21013-37344		SECTION-ASSY,INLET	ｲﾝﾚｯﾄｾｸｼｮﾝｱｯｾﾝ	1	INC.1-18
-	B-21013-37349		SECTION-ASSY,INLET	ｲﾝﾚｯﾄｾｸｼｮﾝｱｯｾﾝ	1	A [EXC][EXE][EXK][EXN][OBT] [EXB/OBT] INC.1-18
1	NO PART NO.	#	HOUSING,INLET	ﾊｳｼﾞﾝｸﾞ	1	
2	NO PART NO.	#	SPOOL	ｽﾌﾟｰﾙ	1	
3	B-21731-30802		SPRING	ｽﾌﾟﾘﾝｸﾞ	1	
4	B-21733-40212		CONNECTOR	ｺﾈｸﾀ	1	
5	B-21731-30613		PLUG	ﾌﾟﾗｸﾞ	1	
6	B-95113-02400		O-RING	Oﾘﾝｸﾞ	1	
7	B-21731-30703		HOUSING	ﾊｳｼﾞﾝｸﾞ	1	
8	B-21731-30502		POPPET	ﾎﾟﾍﾟｯﾄ	1	
9	B-21731-30306		SPRING	ｽﾌﾟﾘﾝｸﾞ	1	
-	B-21731-30307		SPRING	ｽﾌﾟﾘﾝｸﾞ	1	A [EXC][EXE][EXK][EXN][OBT] [EXB/OBT]
10	B-95111-01200		O-RING	Oﾘﾝｸﾞ	1	
11	B-21731-30406		PLATE	ﾌﾟﾚｰﾄ	1	
12	B-92703-06181		BOLT	ﾎﾞﾙﾄ	2	
13	B-91511-08180		SCREW	ｽｸﾘｭ	1	
14	B-93364-08052		NUT	ﾅｯﾄ	1	
15	B-21001-00106		O-RING	Oﾘﾝｸﾞ	1	
16	NO PART NO.	#	PLATE,NAME	ﾌﾟﾚｰﾄ	1	
17	NO PART NO.	#	SCREW	ｽｸﾘｭ	4	
18	B-97123-01111		PLUG	ﾌﾟﾗｸﾞ	1	

FIG.155 SPOOL SECTION (LIFT)

(F6037360) スプールセクション

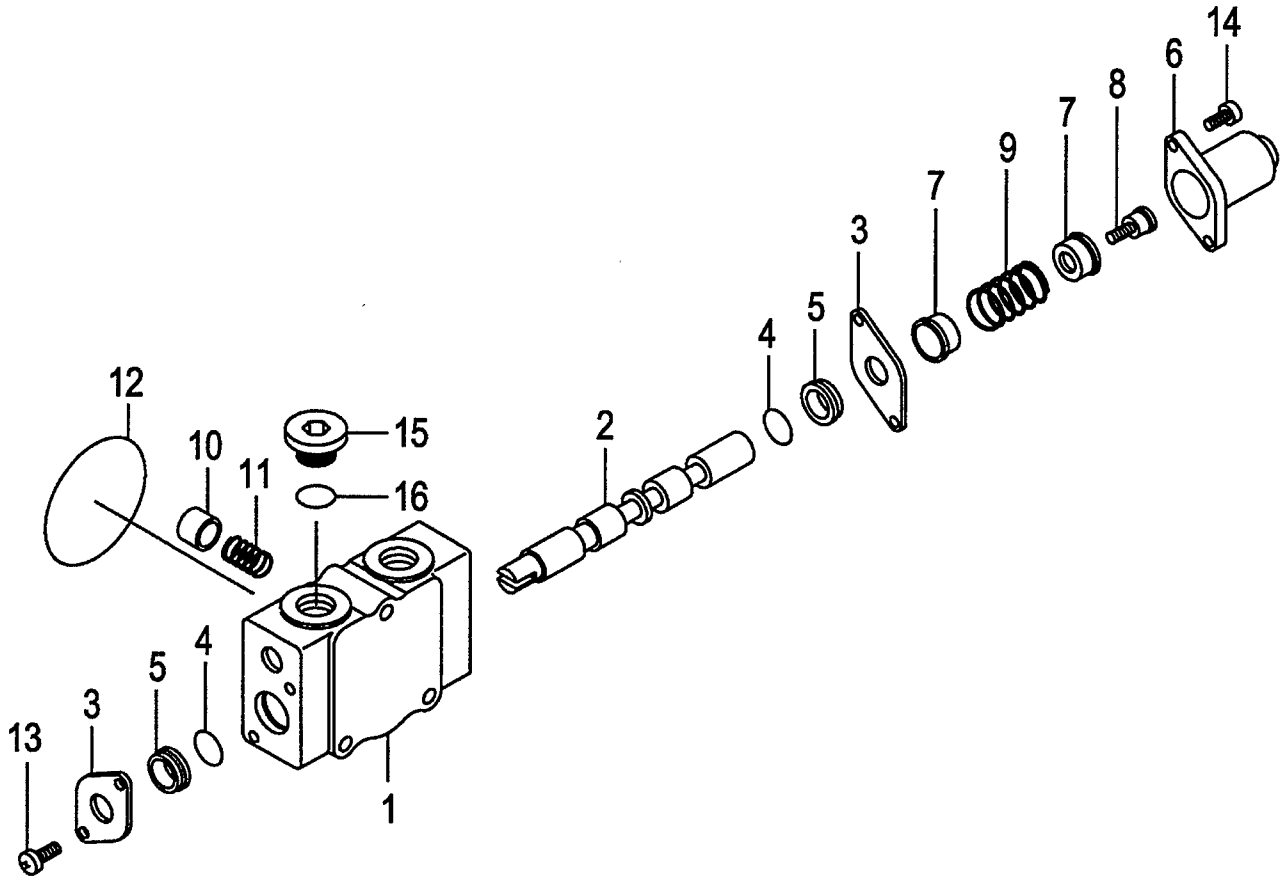

A:FD30C7 FD30T7
B:FD30W7

FIG.155
(F6037360)

Item No	Part No.	Mark	Description		Req'd	Remarks : Serial No.
A1	B-21013-36432		SECTION-ASSY,SPOOL	ｽﾌﾟｰﾙｾｸｼｮﾝｱｯｾﾝ	1	INC.1-16
1	NO PART NO.	#	HOUSING,VALVE	ﾊｳｼﾞﾝｸﾞ	1	
2	NO PART NO.	#	SPOOL	ｽﾌﾟｰﾙ	1	
3	B-21011-31702		PLATE	ﾌﾟﾚｰﾄ	2	
4	B-21001-00689		O-RING	Oﾘﾝｸﾞ	2	
5	B-21011-32801		WIPER	ﾜｲﾊﾟ	2	
6	B-21011-31011		CAP	ｷｬｯﾌﾟ	1	
7	B-21011-30702		SEAT	ｼｰﾄ	2	
8	B-21011-30507		SCREW	ｽｸﾘｭ	1	
9	B-21011-30603		SPRING	ｽﾌﾟﾘﾝｸﾞ	1	
10	B-21011-32404		POPPET	ﾎﾟﾍﾟｯﾄ	1	
11	B-21011-30604		SPRING	ｽﾌﾟﾘﾝｸﾞ	1	
12	B-21001-00106		O-RING	Oﾘﾝｸﾞ	1	
13	B-91111-60102		SCREW	ｽｸﾘｭ	2	
14	B-92703-06181		BOLT	ﾎﾞﾙﾄ	2	
15	B-21001-90408		PLUG	ﾌﾟﾗｸﾞ	1	
16	B-95113-01800		O-RING	Oﾘﾝｸﾞ	1	

FIG.156 SPOOL SECTION (TILT)

(F6037370) スプールセクション

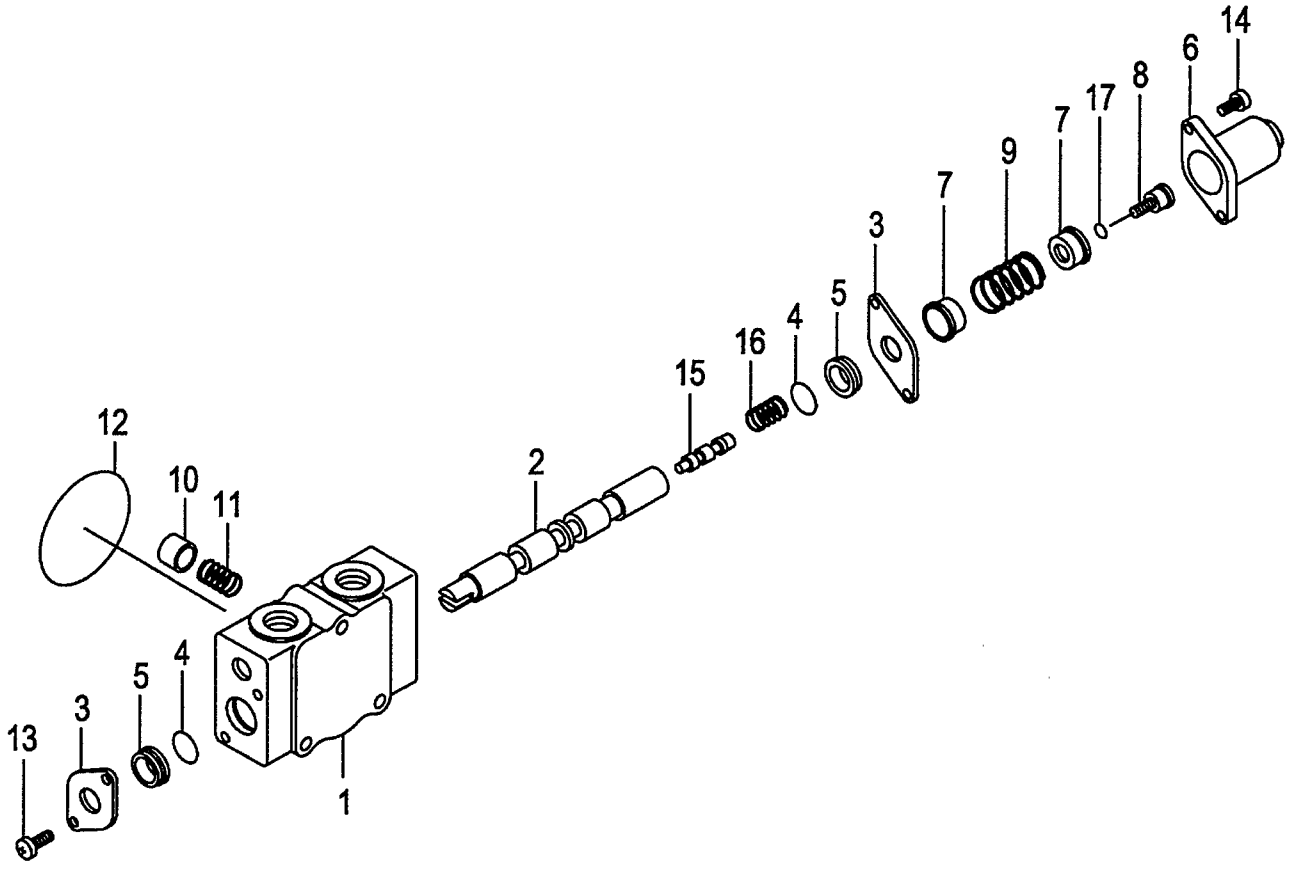

A:FD30C7 FD30T7
B:FD30W7

FIG.156
(F6037370)

Item No	Part No.	Mark	Description		Req'd	Remarks : Serial No.
A1	B-21013-36433		SECTION-ASSY,SPOOL	ｽﾌﾟｰﾙｾｸｼｮﾝｱｯｾﾝ	1	INC.1-17
1	NO PART NO.	#	HOUSING,VALVE	ﾊｳｼﾞﾝｸﾞ	1	
2	NO PART NO.	#	SPOOL	ｽﾌﾟｰﾙ	1	
3	B-21011-31702		PLATE	ﾌﾟﾚｰﾄ	2	
4	B-21001-00689		O-RING	Oﾘﾝｸﾞ	2	
5	B-21011-32801		WIPER	ﾜｲﾊﾟ	2	
6	B-21011-31011		CAP	ｷｬｯﾌﾟ	1	
7	B-21011-30702		SEAT	ｼｰﾄ	2	
8	B-21011-30528		SCREW	ｽｸﾘｭ	1	
9	B-21011-30603		SPRING	ｽﾌﾟﾘﾝｸﾞ	1	
10	B-21011-32404		POPPET	ﾎﾟﾍﾟｯﾄ	1	
11	B-21011-30604		SPRING	ｽﾌﾟﾘﾝｸﾞ	1	
12	B-21001-00106		O-RING	Oﾘﾝｸﾞ	1	
13	B-91111-60102		SCREW	ｽｸﾘｭ	2	
14	B-92703-06181		BOLT	ﾎﾞﾙﾄ	2	
15	NO PART NO.	#	VALVE	ﾊﾞﾙﾌﾞ	1	
16	B-21011-30618		SPRING	ｽﾌﾟﾘﾝｸﾞ	1	
17	B-95133-00500		O-RING	Oﾘﾝｸﾞ	1	

FIG.157 SPOOL SECTION [3SV][4SV][5SV]

(F6037380) スプールセクション

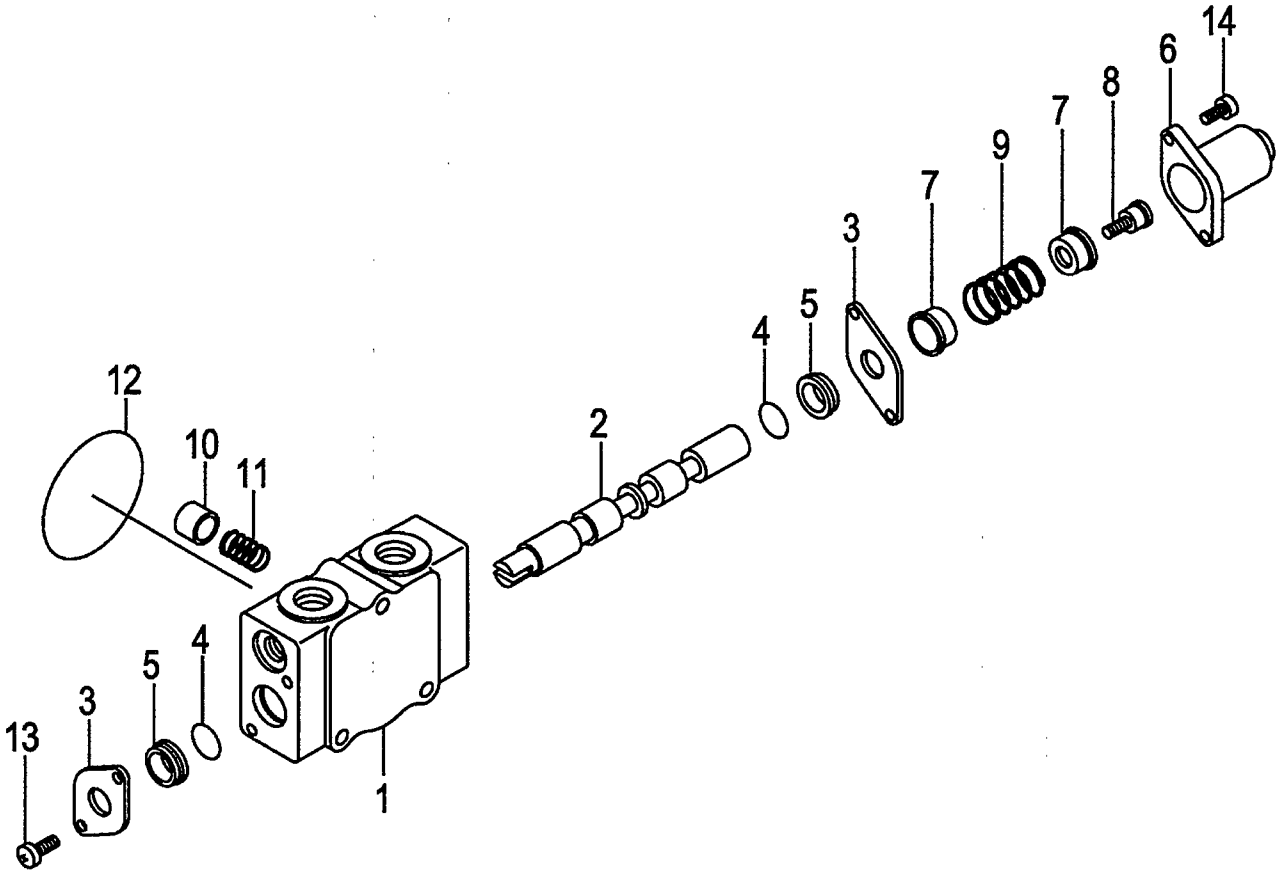

A:FD30C7 FD30T7
B:FD30W7

FIG.157
(F6037380)

Item No	Part No.	Mark	Description		Req'd	Remarks : Serial No.
A1	B-21013-39701		SECTION-ASSY,SPOOL	ｽﾌﾟｰﾙｾｸｼｮﾝｱｯｾﾝ	1	[3SV] INC.1-14
-	B-21013-39701		SECTION-ASSY,SPOOL	ｽﾌﾟｰﾙｾｸｼｮﾝｱｯｾﾝ	2	[4SV] INC.1-14
-	B-21013-39701		SECTION-ASSY,SPOOL	ｽﾌﾟｰﾙｾｸｼｮﾝｱｯｾﾝ	3	[5SV] INC.1-14
1	NO PART NO.	#	HOUSING,VALVE	ﾊｳｼﾞﾝｸﾞ	1	[3SV]
-	NO PART NO.	#	HOUSING,VALVE	ﾊｳｼﾞﾝｸﾞ	2	[4SV]
-	NO PART NO.	#	HOUSING,VALVE	ﾊｳｼﾞﾝｸﾞ	3	[5SV]
2	NO PART NO.	#	SPOOL	ｽﾌﾟｰﾙ	1	[3SV]
-	NO PART NO.	#	SPOOL	ｽﾌﾟｰﾙ	2	[4SV]
-	NO PART NO.	#	SPOOL	ｽﾌﾟｰﾙ	3	[5SV]
3	B-21011-31702		PLATE	ﾌﾟﾚｰﾄ	2	[3SV]
-	B-21011-31702		PLATE	ﾌﾟﾚｰﾄ	4	[4SV]
-	B-21011-31702		PLATE	ﾌﾟﾚｰﾄ	6	[5SV]
4	B-21001-00689		O-RING	Oﾘﾝｸﾞ	2	[3SV]
-	B-21001-00689		O-RING	Oﾘﾝｸﾞ	4	[4SV]
-	B-21001-00689		O-RING	Oﾘﾝｸﾞ	6	[5SV]
5	B-21011-32801		WIPER	ﾜｲﾊﾟ	2	[3SV]
-	B-21011-32801		WIPER	ﾜｲﾊﾟ	4	[4SV]
-	B-21011-32801		WIPER	ﾜｲﾊﾟ	6	[5SV]
6	B-21011-31011		CAP	ｷｬｯﾌﾟ	1	[3SV]
-	B-21011-31011		CAP	ｷｬｯﾌﾟ	2	[4SV]
-	B-21011-31011		CAP	ｷｬｯﾌﾟ	3	[5SV]
7	B-21011-30702		SEAT	ｼｰﾄ	2	[3SV]
-	B-21011-30702		SEAT	ｼｰﾄ	4	[4SV]
-	B-21011-30702		SEAT	ｼｰﾄ	6	[5SV]
8	B-21011-30507		SCREW	ｽｸﾘｭ	1	[3SV]
-	B-21011-30507		SCREW	ｽｸﾘｭ	2	[4SV]
-	B-21011-30507		SCREW	ｽｸﾘｭ	3	[5SV]
9	B-21011-30603		SPRING	ｽﾌﾟﾘﾝｸﾞ	1	[3SV]
-	B-21011-30603		SPRING	ｽﾌﾟﾘﾝｸﾞ	2	[4SV]
-	B-21011-30603		SPRING	ｽﾌﾟﾘﾝｸﾞ	3	[5SV]
10	B-21011-32404		POPPET	ﾎﾟﾍﾟｯﾄ	1	[3SV]
-	B-21011-32404		POPPET	ﾎﾟﾍﾟｯﾄ	2	[4SV]
-	B-21011-32404		POPPET	ﾎﾟﾍﾟｯﾄ	3	[5SV]
11	B-21011-30604		SPRING	ｽﾌﾟﾘﾝｸﾞ	1	[3SV]
-	B-21011-30604		SPRING	ｽﾌﾟﾘﾝｸﾞ	2	[4SV]
-	B-21011-30604		SPRING	ｽﾌﾟﾘﾝｸﾞ	3	[5SV]
12	B-21001-00106		O-RING	Oﾘﾝｸﾞ	1	[3SV]
-	B-21001-00106		O-RING	Oﾘﾝｸﾞ	2	[4SV]
-	B-21001-00106		O-RING	Oﾘﾝｸﾞ	3	[5SV]
13	B-91111-60102		SCREW	ｽｸﾘｭ	2	[3SV]
-	B-91111-60102		SCREW	ｽｸﾘｭ	4	[4SV]
-	B-91111-60102		SCREW	ｽｸﾘｭ	6	[5SV]
14	B-92703-06181		BOLT	ﾎﾞﾙﾄ	2	[3SV]
-	B-92703-06181		BOLT	ﾎﾞﾙﾄ	4	[4SV]
-	B-92703-06181		BOLT	ﾎﾞﾙﾄ	6	[5SV]

FIG.158 CONTROL VALVE FITTING

(F6037390) コントロールバルブフィッティング

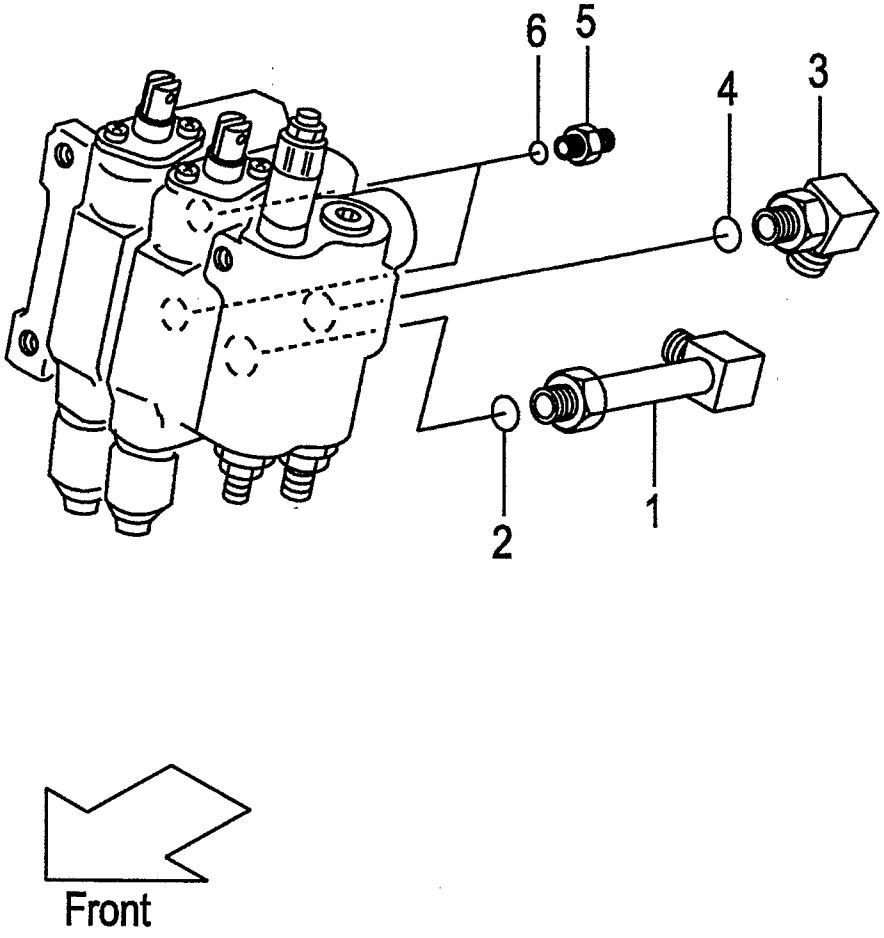

FIG.158
(F6037390)

A:FD30C7 FD30T7 FD30W7

Item No	Part No.	Mark	Description		Req'd	Remarks : Serial No.
A1	22777-60301		ELBOW-ASSY	ｴﾙﾎﾞｱｯｾﾝ	1	INC.1,2
1	NO PART NO.	#	ELBOW	ｴﾙﾎﾞ	1	
2	03320-00180		O-RING	Oﾘﾝｸﾞ	1	
A2	04150-30404		ELBOW-ASSY	ｴﾙﾎﾞｱｯｾﾝ	1	INC.3,4
3	NO PART NO.	#	ELBOW	ｴﾙﾎﾞ	1	
4	03320-00180		O-RING	Oﾘﾝｸﾞ	1	
A3	277H7-60601		NIPPLE-ASSY	ﾆｯﾌﾟﾙｱｯｾﾝ	2	INC.5,6
5	NO PART NO.	#	NIPPLE	ﾆｯﾌﾟﾙ	2	
6	03320-00140		O-RING	Oﾘﾝｸﾞ	2	

FIG.159 VALVE CONTROL [2SV]

(F60373A0) ﾊﾞﾙﾌﾞｺﾝﾄﾛｰﾙ

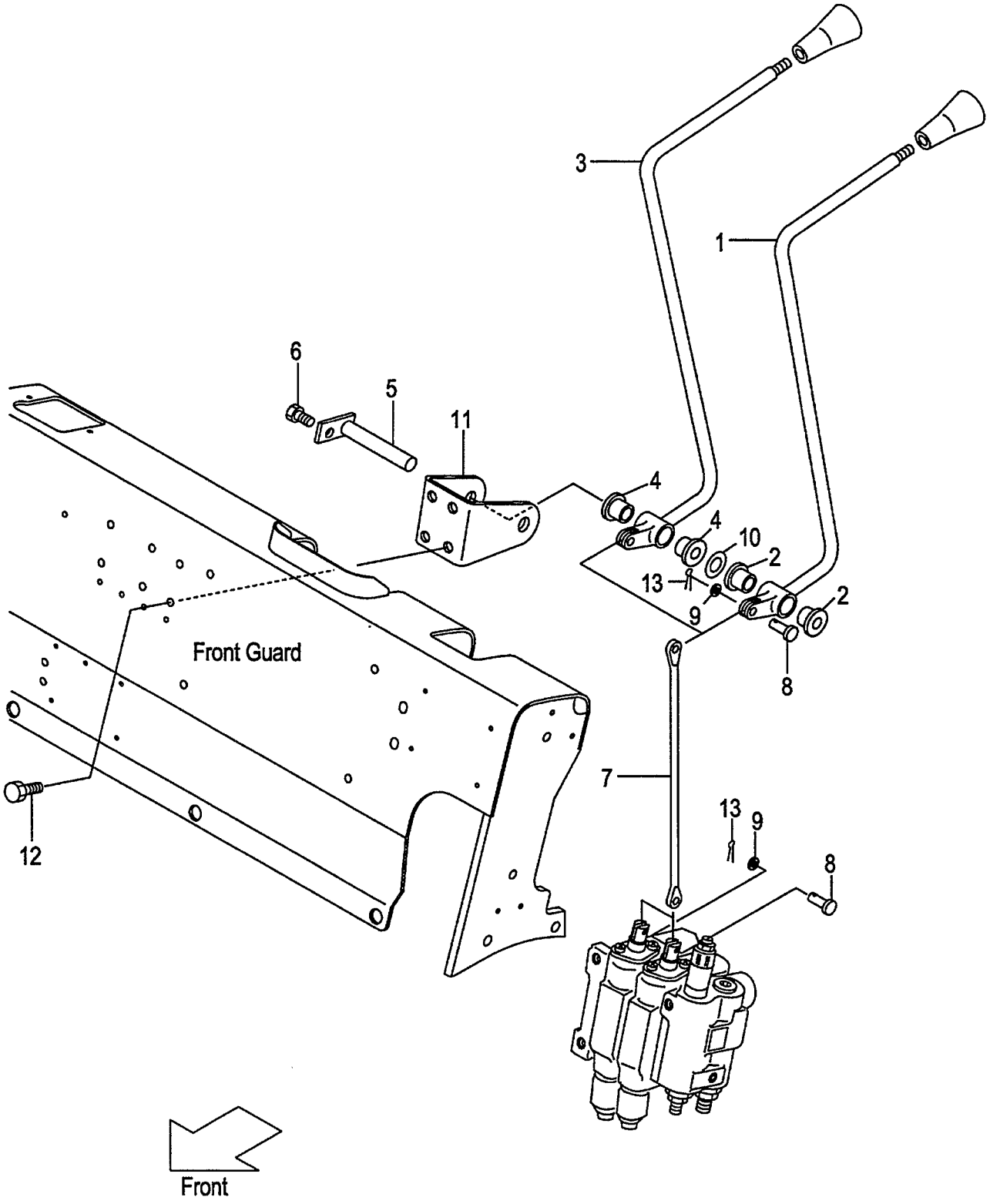

A:FD30C7 FD30T7 FD30W7

Item No	Part No.	Mark	Description		Req'd	Remarks : Serial No.
A1	216G7-40012		LEVER-ASSY,LIFT	ﾘﾌﾄﾚﾊﾞｰｱｯｾﾝ	1	INC.1,2
1	NO PART NO.	#	LEVER,LIFT	ﾚﾊﾞｰ	1	
2	214A7-42071		BUSHING	ﾌﾞｯｼﾝｸﾞ	2	
A2	216G7-40022		LEVER-ASSY,TILT	ﾃｨﾙﾄﾚﾊﾞｰｱｯｾﾝ	1	INC.3,4
3	NO PART NO.	#	LEVER,TILT	ﾚﾊﾞｰ	1	
4	214A7-42071		BUSHING	ﾌﾞｯｼﾝｸﾞ	2	
5	23647-40041		SHAFT,2SV-LEVER	ｼｬﾌﾄ	1	
-	529F3-70401		SHAFT,2SV-LEVER	ｼｬﾌﾄ	1	[FC]
6	01183-06012		BOLT	ﾎﾞﾙﾄ	1	
7	214A7-42171		JOINT	ｼﾞｮｲﾝﾄ	2	
8	22717-40061		PIN,CLEVIS	ﾋﾟﾝ	4	
9	02000-00005		WASHER	ﾜｯｼｬ	4	
10	22517-40051		SHIM,T-0.2	ｼﾑ	3	
11	216G7-42001		BRACKET,VALVE-LEVER	ﾌﾞﾗｹｯﾄ	1	
12	216H3-92281		BOLT	ﾎﾞﾙﾄ	4	
13	02200-16010		PIN,COTTER	ﾋﾟﾝ	4	

FIG.160 VALVE CONTROL [3SV]

(F60373B0) ﾊﾞﾙﾌﾞｺﾝﾄﾛｰﾙ

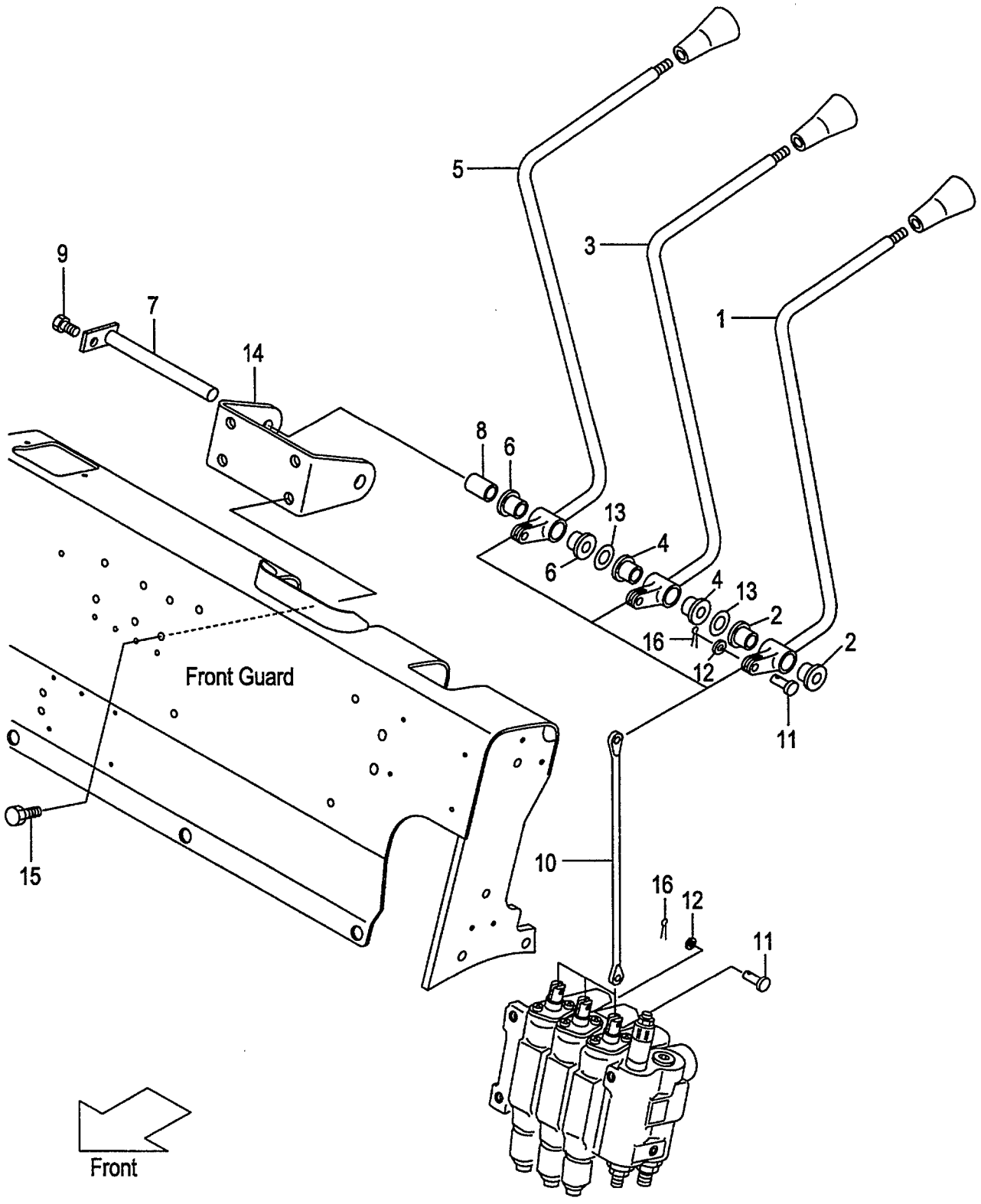

A:FD30C7 FD30T7 FD30W7

Item No	Part No.	Mark	Description		Req'd	Remarks : Serial No.
A1	216G7-40012		LEVER-ASSY,LIFT	ﾘﾌﾄﾚﾊﾞｰｱｯｾﾝ	1	[3SV] INC.1,2
1	NO PART NO.	#	LEVER,LIFT	ﾚﾊﾞｰ	1	[3SV]
2	214A7-42071		BUSHING	ﾌﾞｯｼﾝｸﾞ	2	[3SV]
A2	216G7-40022		LEVER-ASSY,TILT	ﾃｨﾙﾄﾚﾊﾞｰｱｯｾﾝ	1	[3SV] INC.3,4
3	NO PART NO.	#	LEVER,TILT	ﾚﾊﾞｰ	1	[3SV]
4	214A7-42071		BUSHING	ﾌﾞｯｼﾝｸﾞ	2	[3SV]
A3	216G7-40032		LEVER-ASSY,THIRD	ﾚﾊﾞｰｱｯｾﾝ	1	[3SV] INC.5,6
5	NO PART NO.	#	LEVER,THIRD	ﾚﾊﾞｰ	1	[3SV]
6	214A7-42071		BUSHING	ﾌﾞｯｼﾝｸﾞ	2	[3SV]
7	23457-42041		SHAFT,3&4SV-LEVER	ｼｬﾌﾄ	1	[3SV]
-	529F3-70411		SHAFT,3&4SV-LEVER	ｼｬﾌﾄ	1	[3SV/FC]
8	23657-42131		COLLAR	ｶﾗｰ	1	[3SV]
9	01183-06012		BOLT	ﾎﾞﾙﾄ	1	[3SV]
10	214A7-42171		JOINT	ｼﾞｮｲﾝﾄ	3	[3SV]
11	22717-40061		PIN,CLEVIS	ﾋﾟﾝ	6	[3SV]
12	02000-00005		WASHER	ﾜｯｼｬ	6	[3SV]
13	22517-40051		SHIM,T-0.2	ｼﾑ	6	[3SV]
14	216G7-42011		BRACKET,VALVE-LEVER	ﾌﾞﾗｹｯﾄ	1	[3SV]
15	216H3-92281		BOLT	ﾎﾞﾙﾄ	4	[3SV]
16	02200-16010		PIN,COTTER	ﾋﾟﾝ	6	[3SV]

FIG.161 VALVE CONTROL [4SV]

(F60373C0) ﾊﾞﾙﾌﾞｺﾝﾄﾛｰﾙ

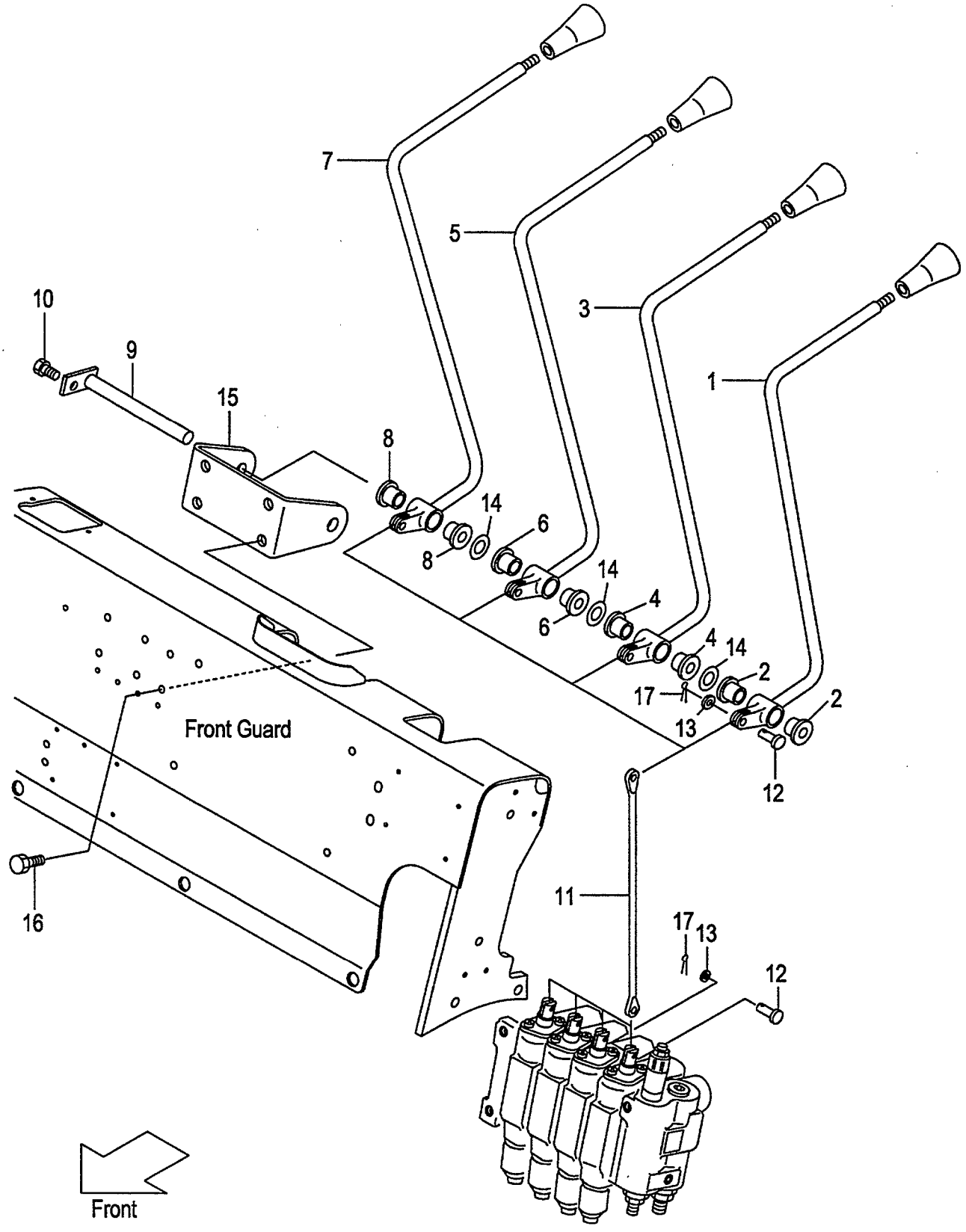

A:FD30C7 FD30T7 FD30W7

Item No	Part No.	Mark	Description		Req'd	Remarks : Serial No.
A1	216G7-40012		LEVER-ASSY,LIFT	ﾘﾌﾄﾚﾊﾞｰｱｯｾﾝ	1	[4SV] INC.1,2
1	NO PART NO.	#	LEVER,LIFT	ﾚﾊﾞｰ	1	[4SV]
2	214A7-42071		BUSHING	ﾌﾞｯｼﾝｸﾞ	2	[4SV]
A2	216G7-40022		LEVER-ASSY,TILT	ﾃｨﾙﾄﾚﾊﾞｰｱｯｾﾝ	1	[4SV] INC.3,4
3	NO PART NO.	#	LEVER,TILT	ﾚﾊﾞｰ	1	[4SV]
4	214A7-42071		BUSHING	ﾌﾞｯｼﾝｸﾞ	2	[4SV]
A3	216G7-40032		LEVER-ASSY,THIRD	ﾚﾊﾞｰｱｯｾﾝ	1	[4SV] INC.5,6
5	NO PART NO.	#	LEVER,THIRD	ﾚﾊﾞｰ	1	[4SV]
6	214A7-42071		BUSHING	ﾌﾞｯｼﾝｸﾞ	2	[4SV]
A4	216G7-40042		LEVER-ASSY,FOURTH	ﾚﾊﾞｰｱｯｾﾝ	1	[4SV] INC.7,8
7	NO PART NO.	#	LEVER,FOURTH	ﾚﾊﾞｰ	1	[4SV]
8	214A7-42071		BUSHING	ﾌﾞｯｼﾝｸﾞ	2	[4SV]
9	23457-42041		SHAFT,3&4SV-LEVER	ｼｬﾌﾄ	1	[4SV]
-	529F3-70411		SHAFT,3&4SV-LEVER	ｼｬﾌﾄ	1	[4SV/FC]
10	01183-06012		BOLT	ﾎﾞﾙﾄ	1	[4SV]
11	214A7-42171		JOINT	ｼﾞｮｲﾝﾄ	4	[4SV]
12	22717-40061		PIN,CLEVIS	ﾋﾟﾝ	8	[4SV]
13	02000-00005		WASHER	ﾜｯｼｬ	8	[4SV]
14	22517-40051		SHIM,T-0.2	ｼﾑ	9	[4SV]
15	216G7-42011		BRACKET,VALVE-LEVER	ﾌﾞﾗｹｯﾄ	1	[4SV]
16	216H3-92281		BOLT	ﾎﾞﾙﾄ	4	[4SV]
17	02200-16010		PIN,COTTER	ﾋﾟﾝ	8	[4SV]

FIG.162 VALVE CONTROL [5SV]

(F60373D0) ﾊﾞﾙﾌﾞｺﾝﾄﾛｰﾙ

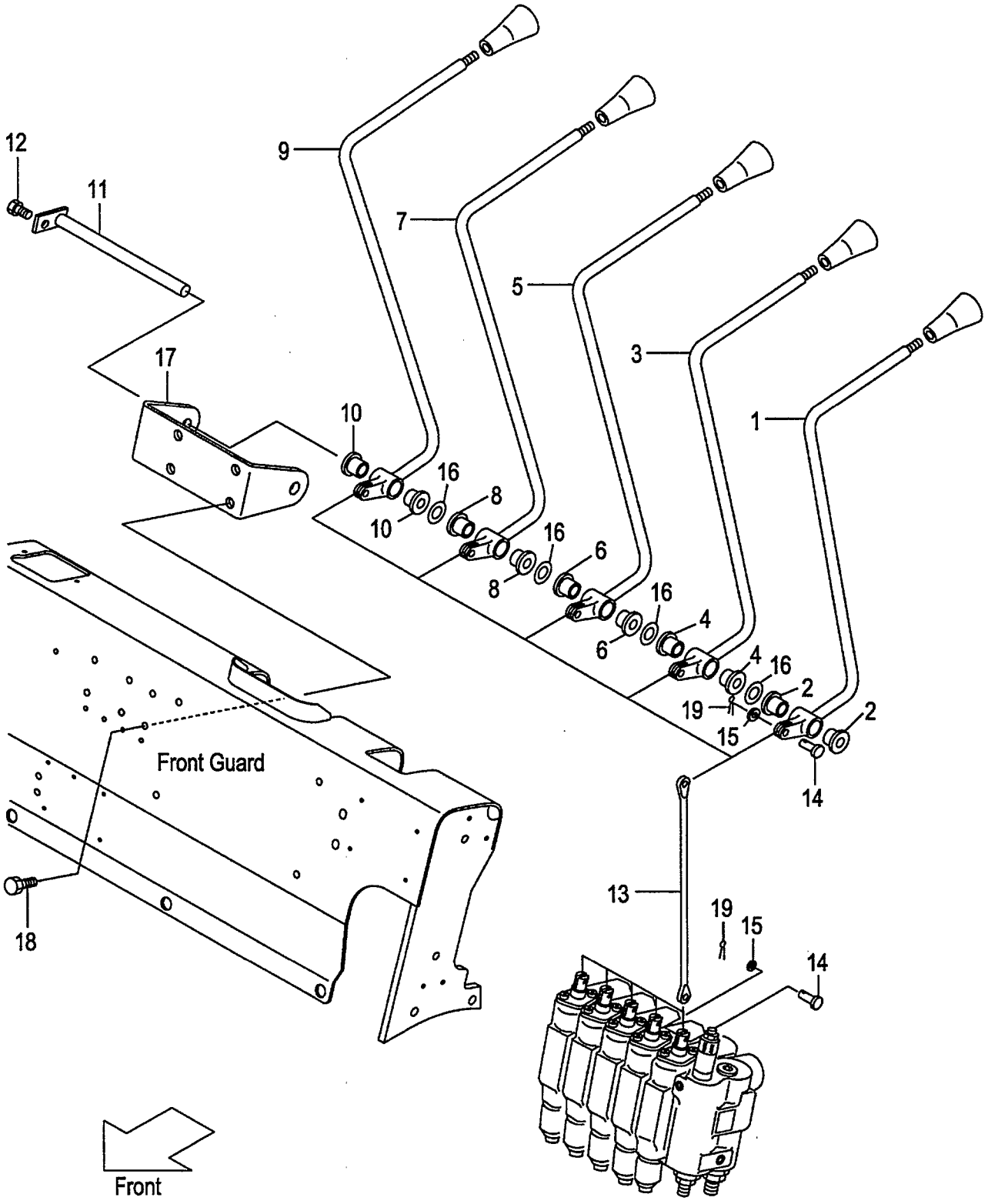

FIG.162
(F60373D0)

A:FD30C7 FD30T7 FD30W7

Item No	Part No.	Mark	Description		Req'd	Remarks : Serial No.
A1	216G7-40012		LEVER-ASSY,LIFT	ﾘﾌﾄﾚﾊﾞｰｱｯｾﾝ	1	[5SV] INC.1,2
1	NO PART NO.	#	LEVER,LIFT	ﾚﾊﾞｰ	1	[5SV]
2	214A7-42071		BUSHING	ﾌﾞｯｼﾝｸﾞ	2	[5SV]
A2	216G7-40022		LEVER-ASSY,TILT	ﾃｨﾙﾄﾚﾊﾞｰｱｯｾﾝ	1	[5SV] INC.3,4
3	NO PART NO.	#	LEVER,TILT	ﾚﾊﾞｰ	1	[5SV]
4	214A7-42071		BUSHING	ﾌﾞｯｼﾝｸﾞ	2	[5SV]
A3	216G7-40032		LEVER-ASSY,THIRD	ﾚﾊﾞｰｱｯｾﾝ	1	[5SV] INC.5,6
5	NO PART NO.	#	LEVER,THIRD	ﾚﾊﾞｰ	1	[5SV]
6	214A7-42071		BUSHING	ﾌﾞｯｼﾝｸﾞ	2	[5SV]
A4	216G7-40042		LEVER-ASSY,FOURTH	ﾚﾊﾞｰｱｯｾﾝ	1	[5SV] INC.7,8
7	NO PART NO.	#	LEVER,FOURTH	ﾚﾊﾞｰ	1	[5SV]
8	214A7-42071		BUSHING	ﾌﾞｯｼﾝｸﾞ	2	[5SV]
A5	234A7-40052		LEVER-ASSY,FIFTH	ﾚﾊﾞｰｱｯｾﾝ	1	[5SV] INC.9,10
9	NO PART NO.	#	LEVER,FIFTH	ﾚﾊﾞｰ	1	[5SV]
10	214A7-42071		BUSHING	ﾌﾞｯｼﾝｸﾞ	2	[5SV]
11	55593-02371		SHAFT,5SV-LEVER	ｼｬﾌﾄ	1	[5SV]
-	529F3-70421		SHAFT,5SV-LEVER	ｼｬﾌﾄ	1	[5SV/FC]
12	01183-06012		BOLT	ﾎﾞﾙﾄ	1	[5SV]
13	214A7-42171		JOINT	ｼﾞｮｲﾝﾄ	5	[5SV]
14	22717-40061		PIN,CLEVIS	ﾋﾟﾝ	10	[5SV]
15	02000-00005		WASHER	ﾜｯｼｬ	10	[5SV]
16	22517-40051		SHIM,T-0.2	ｼﾑ	12	[5SV]
17	234A7-42011		BRACKET,VALVE-LEVER	ﾌﾞﾗｹｯﾄ	1	[5SV]
18	216H3-92281		BOLT	ﾎﾞﾙﾄ	4	[5SV]
19	02200-16010		PIN,COTTER	ﾋﾟﾝ	10	[5SV]

FIG.163 VALVE CONTROL KNOB

(F60373E0) ﾊﾞﾙﾌﾞｺﾝﾄﾛｰﾙﾉﾌﾞ

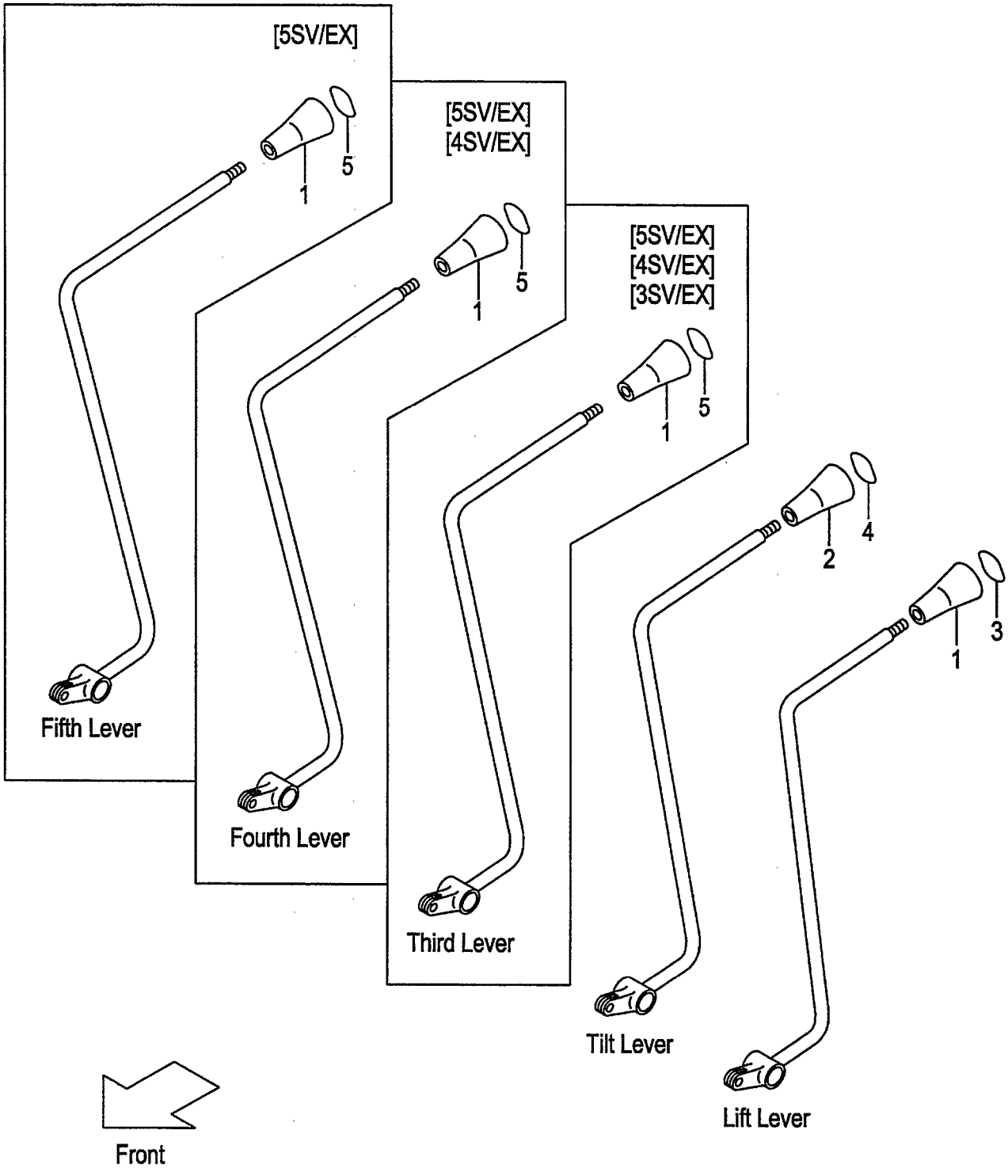

A:FD30C7 FD30T7
B:FD30W7

FIG.163
(F60373E0)

Item No	Part No.	Mark	Description		Req'd	Remarks : Serial No.
1	214A7-42181		KNOB,VALVE-LEVER	ﾉﾌﾞ	1	
-	214A7-42181		KNOB,VALVE-LEVER	ﾉﾌﾞ	2	A [3SV/EX]
-	214A7-42181		KNOB,VALVE-LEVER	ﾉﾌﾞ	3	A [4SV/EX]
-	214A7-42181		KNOB,VALVE-LEVER	ﾉﾌﾞ	4	A [5SV/EX]
2	281E7-42101		KNOB,VALVE-LEVER	ﾉﾌﾞ	1	
3	214A7-42191		DECAL,SYMBOL,LIFT	ﾃﾞｶﾙ	1	
4	214A7-42201		DECAL,SYMBOL,TILT	ﾃﾞｶﾙ	1	
5	514A2-72411		DECAL,SYMBOL,SPACE	ﾃﾞｶﾙ	1	A [3SV/EX]
-	514A2-72411		DECAL,SYMBOL,SPACE	ﾃﾞｶﾙ	2	A [4SV/EX]
-	514A2-72411		DECAL,SYMBOL,SPACE	ﾃﾞｶﾙ	3	A [5SV/EX]

FIG.164 HYDRAULIC LINE (MAIN)(1/3)(CLUTCH)(TOR-CON)

(F6037620) ﾊｲﾄﾞﾛﾘｯｸﾗｲﾝ(ﾒｲﾝ)(1/3)

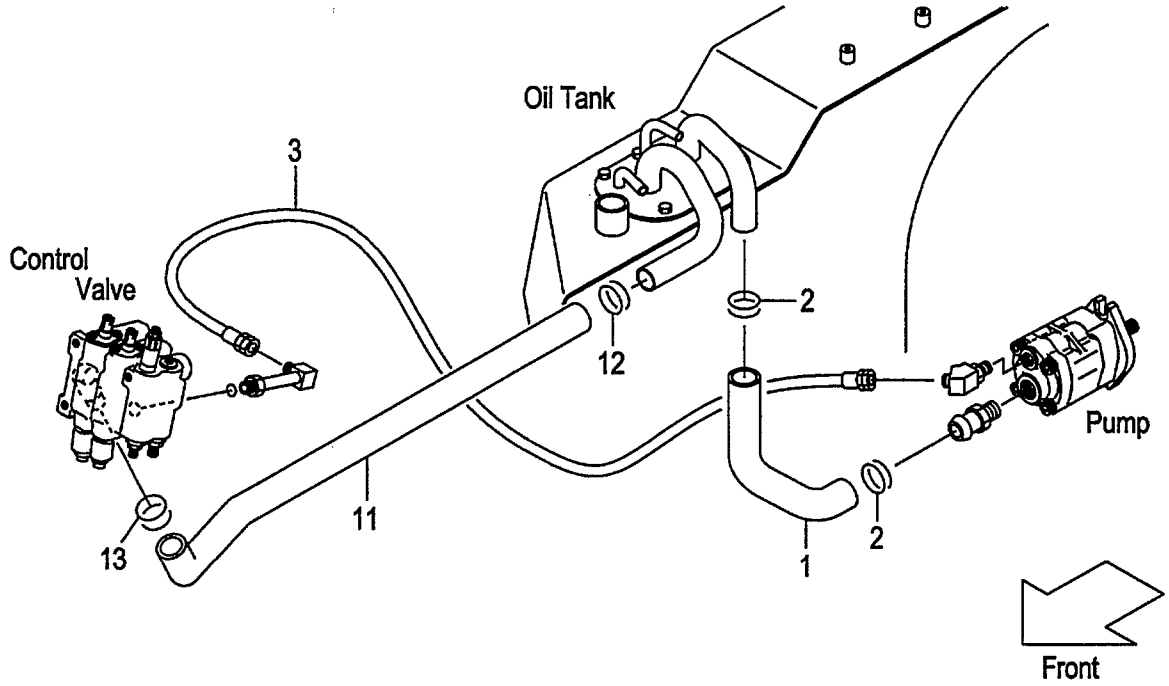

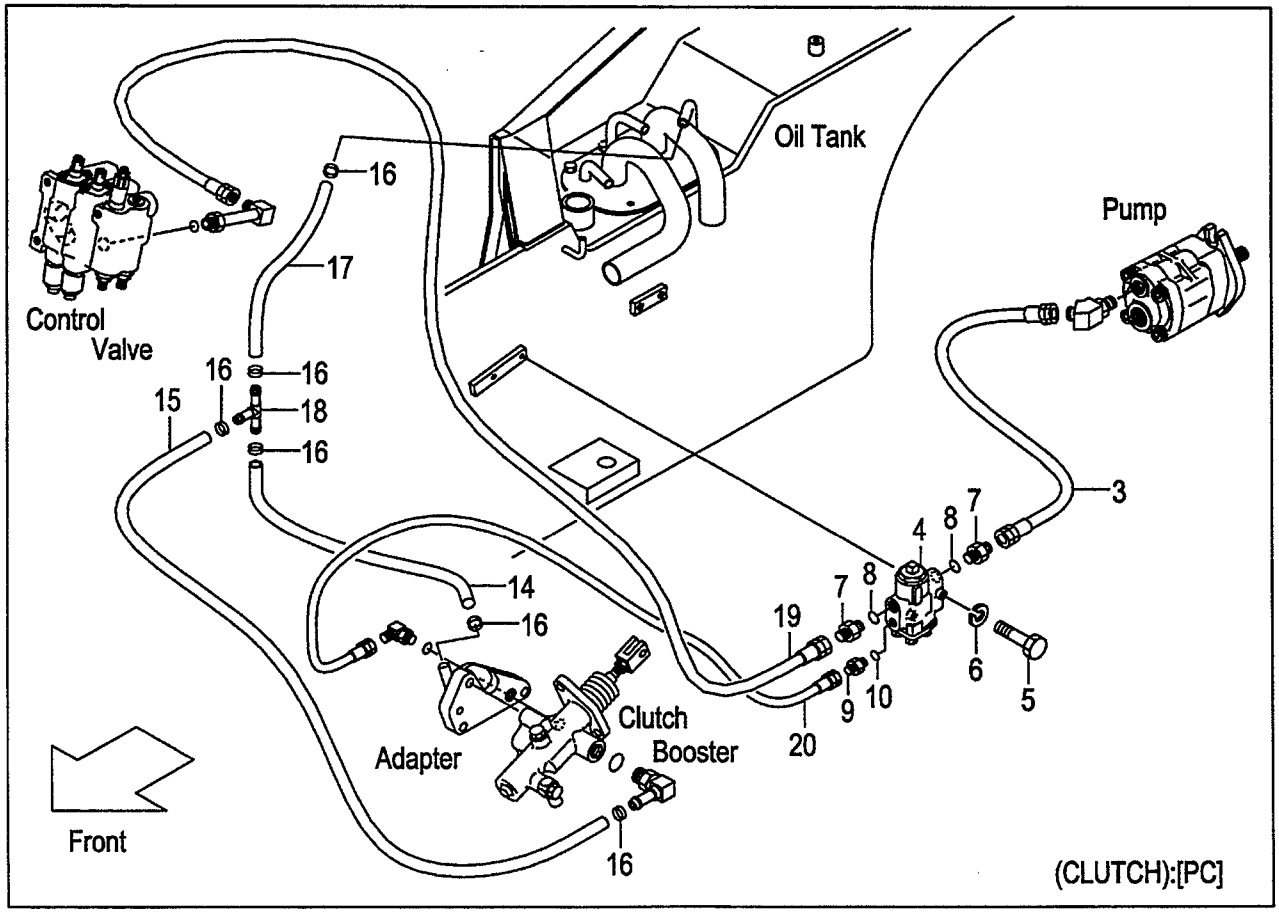

A:FD30C7
B:FD30T7

FIG.164
(F6037620)

Item No	Part No.	Mark	Description		Req'd	Remarks : Serial No.
1	242F7-62001		HOSE,SUCTION	ホース	1	
2	04911-00046		CLIP	クリップ	2	
3	04691-04108		HOSE	ホース	1	
-	04691-04048		HOSE	ホース	1	A [PC]
4	234H7-60301		VALVE,FLOW-PRIORITY	バルブ	1	A [PC]
5	01100-06055		BOLT	ボルト	2	A [PC]
6	02010-00006		WASHER	ワッシャ	2	A [PC]
A1	04134-20404		NIPPLE-ASSY	ニップルアッセン	2	A [PC] INC.7,8
7	NO PART NO.	#	NIPPLE	ニップル	2	A [PC]
8	03320-00180		O-RING	Oリング	2	A [PC]
A2	23657-60311		NIPPLE-ASSY	ニップルアッセン	1	A [PC] INC.9,10
9	NO PART NO.	#	NIPPLE	ニップル	1	A [PC]
10	03320-00140		O-RING	Oリング	1	A [PC]
11	234A7-62101		HOSE,RETURN	ホース	1	
-	234A7-62201		HOSE,RETURN	ホース	1	[4SV][5SV]
12	04911-00044		CLIP	クリップ	1	
13	04911-00040		CLIP	クリップ	1	
14	04710-04102		HOSE	ホース	1	A [PC]
15	04710-04121		HOSE	ホース	1	A [PC]
16	04911-00021		CLIP	クリップ	6	A [PC]
17	04710-04030		HOSE	ホース	1	A [PC]
18	53675-55051		THREE-WAY	スリーウエイ	1	A [PC]
19	04691-04048		HOSE	ホース	1	A [PC]
20	04691-02065		HOSE	ホース	1	A [PC]

FIG.165 HYDRAULIC LINE (MAIN)(1/3)(OIL CLUTCH)

(F6037650) ﾊｲﾄﾞﾛﾘｯｸﾗｲﾝ(ﾒｲﾝ)(1/3)

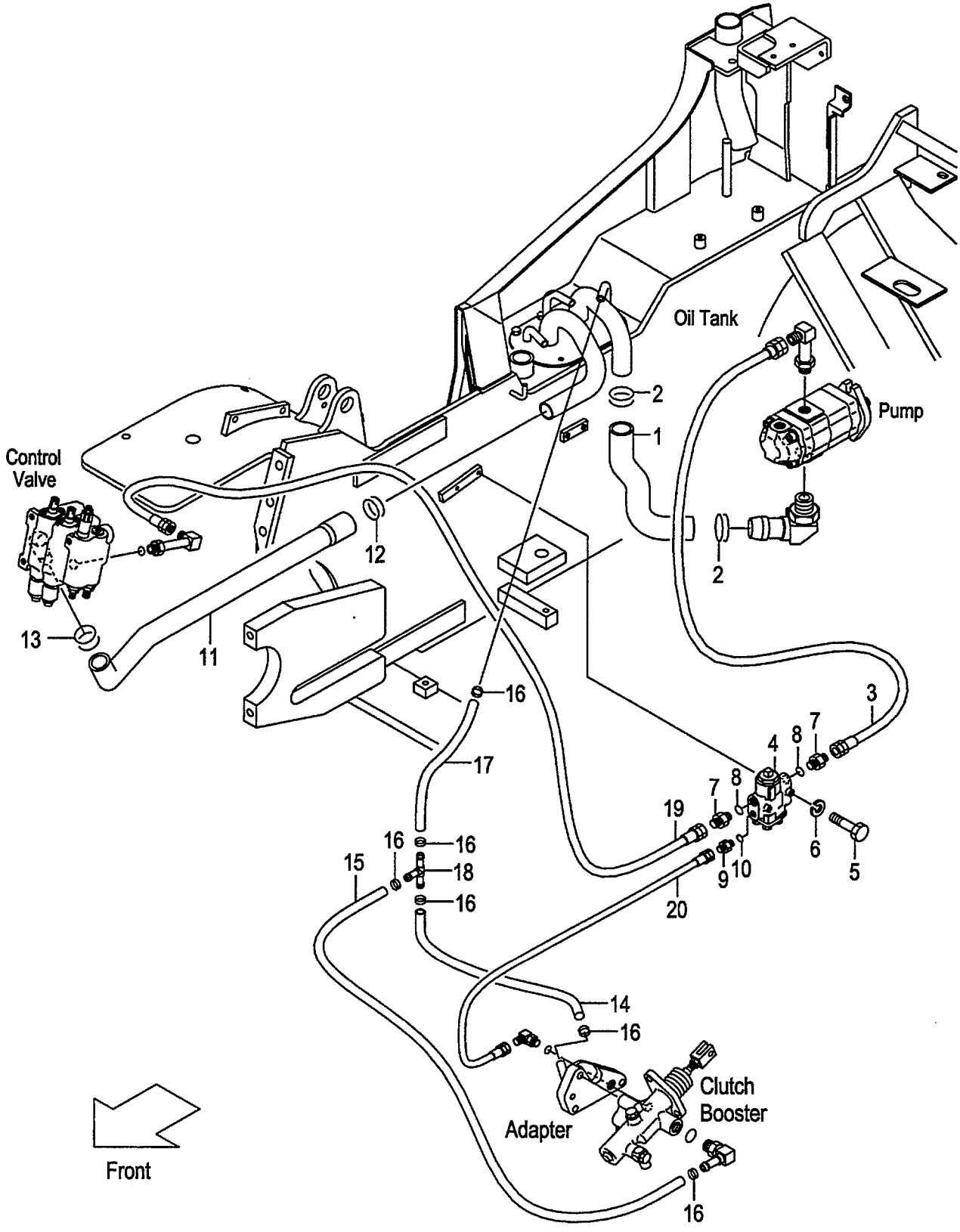

A:FD30W7

Item No	Part No.	Mark	Description		Req'd	Remarks : Serial No.
1	242S7-62001		HOSE,SUCTION	ホース	1	
2	04911-00046		CLIP	クリップ	2	
3	04691-04048		HOSE	ホース	1	
4	234H7-60301		VALVE,FLOW-PRIORITY	バルブ	1	
5	01100-06055		BOLT	ボルト	2	
6	02010-00006		WASHER	ワッシャ	2	
A1	04134-20404		NIPPLE-ASSY	ニップルアッセン	2	INC.7,8
7	NO PART NO.	#	NIPPLE	ニップル	2	
8	03320-00180		O-RING	Oリング	2	
A2	23657-60311		NIPPLE-ASSY	ニップルアッセン	1	INC.9,10
9	NO PART NO.	#	NIPPLE	ニップル	1	
10	03320-00140		O-RING	Oリング	1	
11	234A7-62101		HOSE,RETURN	ホース	1	
-	234A7-62201		HOSE,RETURN	ホース	1	[4SV][5SV]
12	04911-00044		CLIP	クリップ	1	
13	04911-00040		CLIP	クリップ	1	
14	04710-04102		HOSE	ホース	1	
15	04710-04121		HOSE	ホース	1	
16	04911-00021		CLIP	クリップ	6	
17	04710-04030		HOSE	ホース	1	
18	53675-55051		THREE-WAY	スリーウエイ	1	
19	04691-04048		HOSE	ホース	1	
20	04691-02065		HOSE	ホース	1	

FIG.166 HYDRAULIC LINE (MAIN)(2/3)

(F6037660) ﾊｲﾄﾞﾛﾘｯｸﾗｲﾝ(ﾒｲﾝ)(2/3)

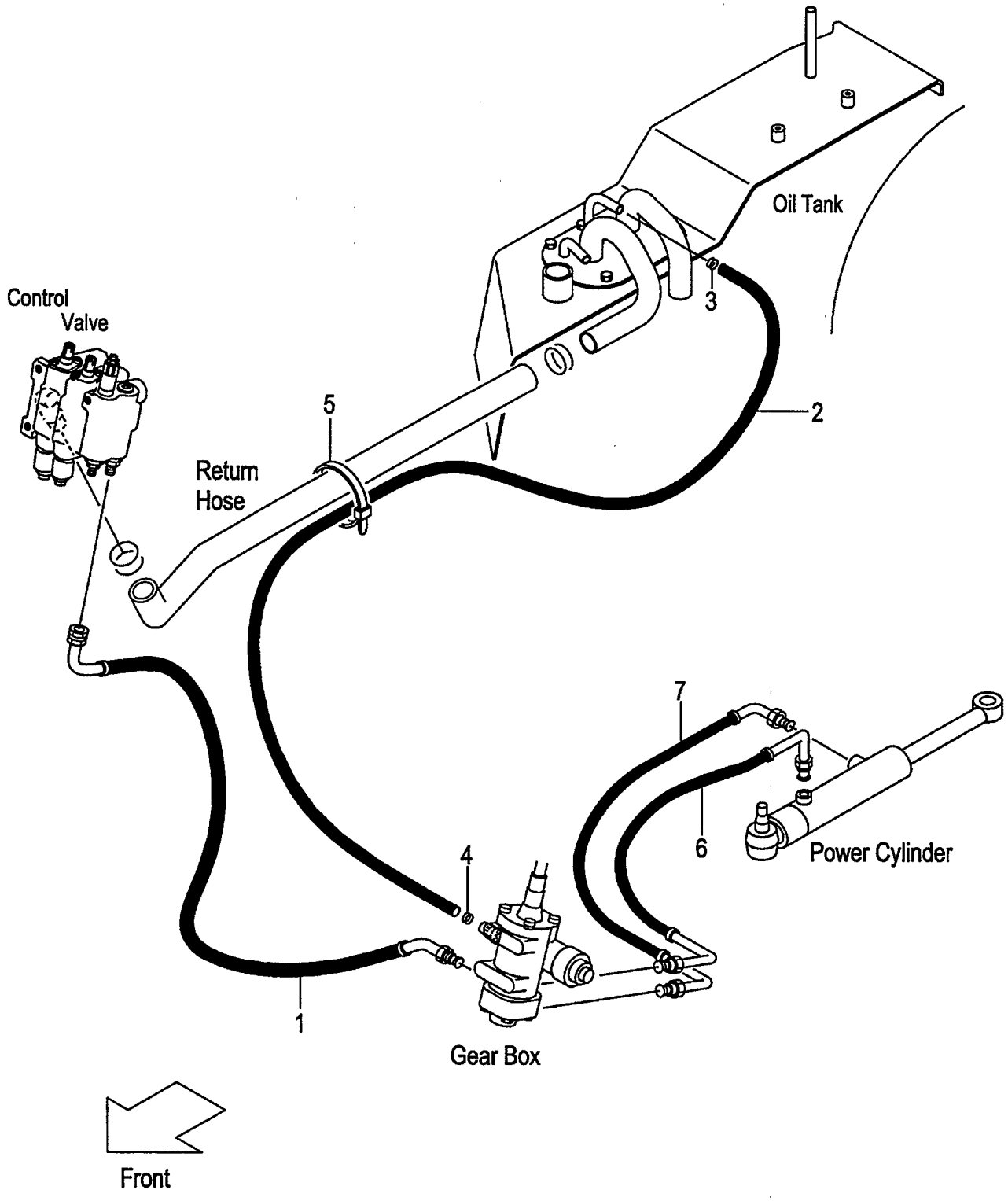

A:FD30C7
B:FD30T7
C:FD30W7

FIG.166
(F6037660)

Item No	Part No.	Mark	Description		Req'd	Remarks : Serial No.
1	214A7-62131		HOSE	ﾎｰｽ	1	
2	04710-04140		HOSE	ﾎｰｽ	1	
3	04911-00021		CLIP	ｸﾘｯﾌﾟ	1	
4	04911-00020		CLIP	ｸﾘｯﾌﾟ	1	
5	27042-42312		BAND,CABLE	ﾊﾞﾝﾄﾞ	2	
6	239A7-60301		HOSE,PS,FRONT	ﾎｰｽ	1	A,B
-	239H7-60401		HOSE,PS,FRONT	ﾎｰｽ	1	C
-	239H7-60401		HOSE,PS,FRONT	ﾎｰｽ	1	A
						[PC]
7	239A7-60311		HOSE,PS,REAR	ﾎｰｽ	1	

FIG.167 HYDRAULIC LINE (MAIN)(2/3) [EXC][EXE][EXK][EXN][OBT]

(F60376A0) ﾊｲﾄﾞﾛﾘｯｸﾗｲﾝ(ﾒｲﾝ)(2/3)

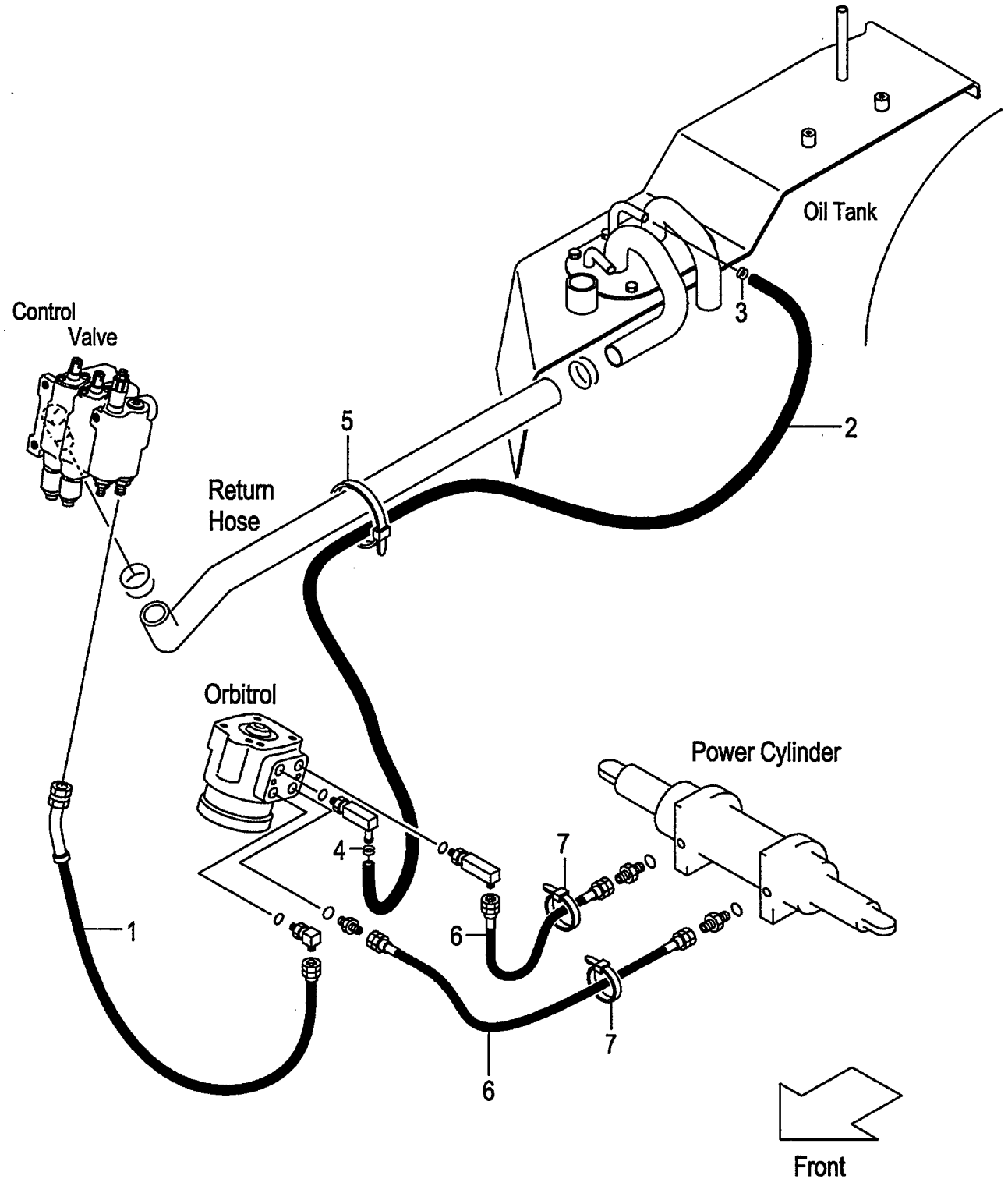

A:FD30C7
B:FD30T7

FIG.167
(F60376A0)

Item No	Part No.	Mark	Description		Req'd	Remarks : Serial No.
1	215E7-62091		HOSE	ﾎｰｽ	1	[EXC][EXE][EXK][EXN][OBT] [EXB/OBT]
2	04710-04165		HOSE	ﾎｰｽ	1	[EXC][EXE][EXK][EXN][OBT] [EXB/OBT]
3	04911-00021		CLIP	ｸﾘｯﾌﾟ	1	[EXC][EXE][EXK][EXN][OBT] [EXB/OBT]
4	04911-00020		CLIP	ｸﾘｯﾌﾟ	1	[EXC][EXE][EXK][EXN][OBT] [EXB/OBT]
5	27042-42312		BAND,CABLE	ﾊﾞﾝﾄﾞ	2	[EXC][EXE][EXK][EXN][OBT] [EXB/OBT]
6	523S2-42512		HOSE,PS	ﾎｰｽ	2	[EXC][EXE][EXK][EXN][OBT] [EXB/OBT]
7	04913-11380		BAND,INSHULOCK	ﾊﾞﾝﾄﾞ	2	[EXC][EXE][EXK][EXN][OBT] [EXB/OBT]

FIG.168 HYDRAULIC LINE (MAIN)(2/3) [(EXC,EXE,EXK,EXN)/PSS]

(F60376B0) ﾊｲﾄﾞﾛﾘｯｸﾗｲﾝ(ﾒｲﾝ)(2/3)

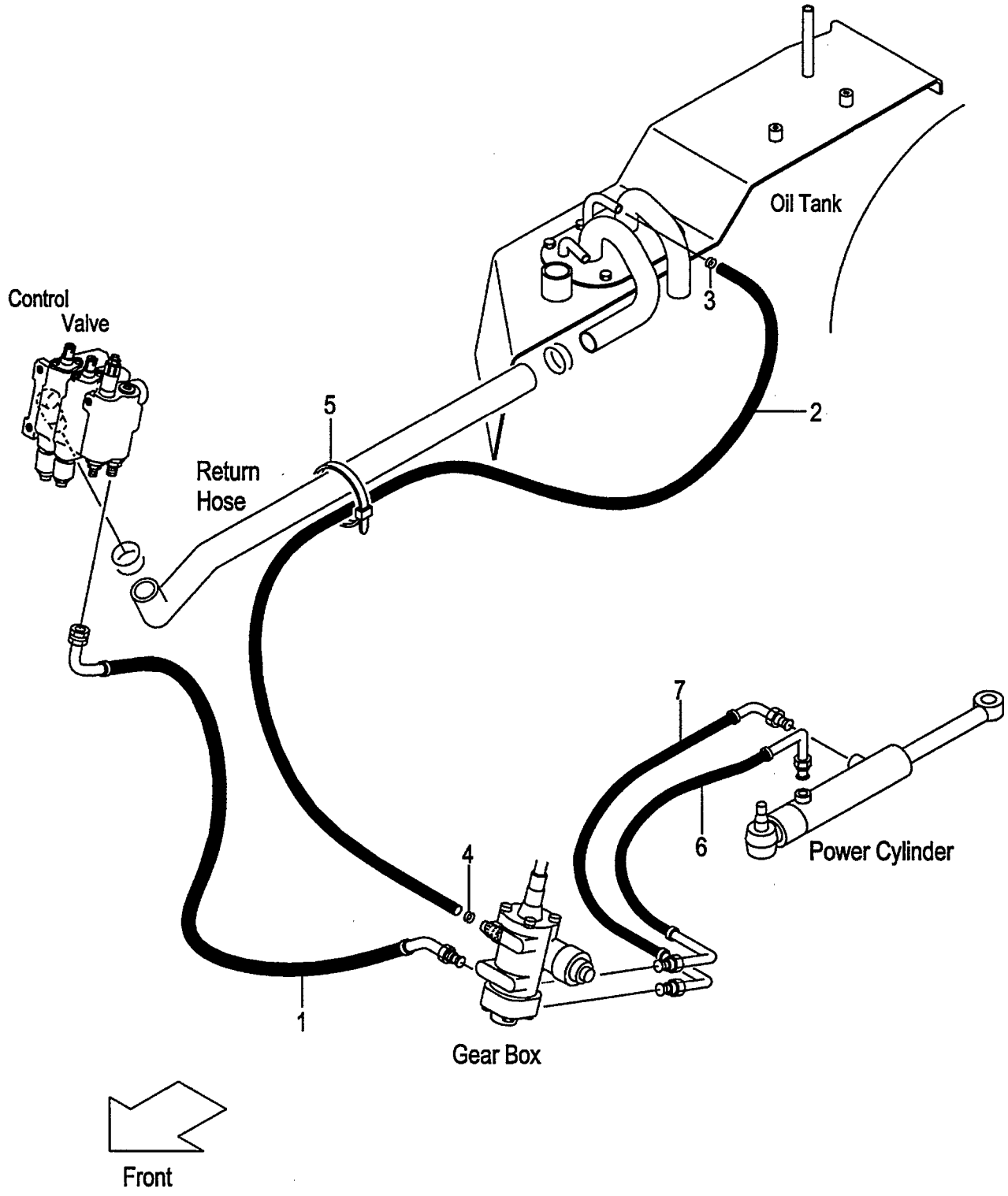

A:FD30C7
B:FD30T7

FIG.168
(F60376B0)

Item No	Part No.	Mark	Description		Req'd	Remarks : Serial No.
1	214A7-62131		HOSE	ﾎｰｽ	1	[EXC/PSS][EXE/PSS][EXK/PSS] [EXN/PSS]
2	04710-04140		HOSE	ﾎｰｽ	1	[EXC/PSS][EXE/PSS][EXK/PSS] [EXN/PSS]
3	04911-00021		CLIP	ｸﾘｯﾌﾟ	1	[EXC/PSS][EXE/PSS][EXK/PSS] [EXN/PSS]
4	04911-00020		CLIP	ｸﾘｯﾌﾟ	1	[EXC/PSS][EXE/PSS][EXK/PSS] [EXN/PSS]
5	27042-42312		BAND,CABLE	ﾊﾞﾝﾄﾞ	2	[EXC/PSS][EXE/PSS][EXK/PSS] [EXN/PSS]
6	239A7-60301		HOSE,PS,FRONT	ﾎｰｽ	1	[EXC/PSS][EXE/PSS][EXK/PSS] [EXN/PSS]
-	239H7-60401		HOSE,PS,FRONT	ﾎｰｽ	1	A [EXC/PSS/PC][EXE/PSS/PC] [EXK/PSS/PC][EXN/PSS/PC]
7	239A7-60311		HOSE,PS,REAR	ﾎｰｽ	1	[EXC/PSS][EXE/PSS][EXK/PSS] [EXN/PSS]

FIG.169 HYDRAULIC LINE (MAIN)(3/3)

(F6037670) ﾊｲﾄﾞﾛﾘｯｸﾗｲﾝ(ﾒｲﾝ)(3/3)

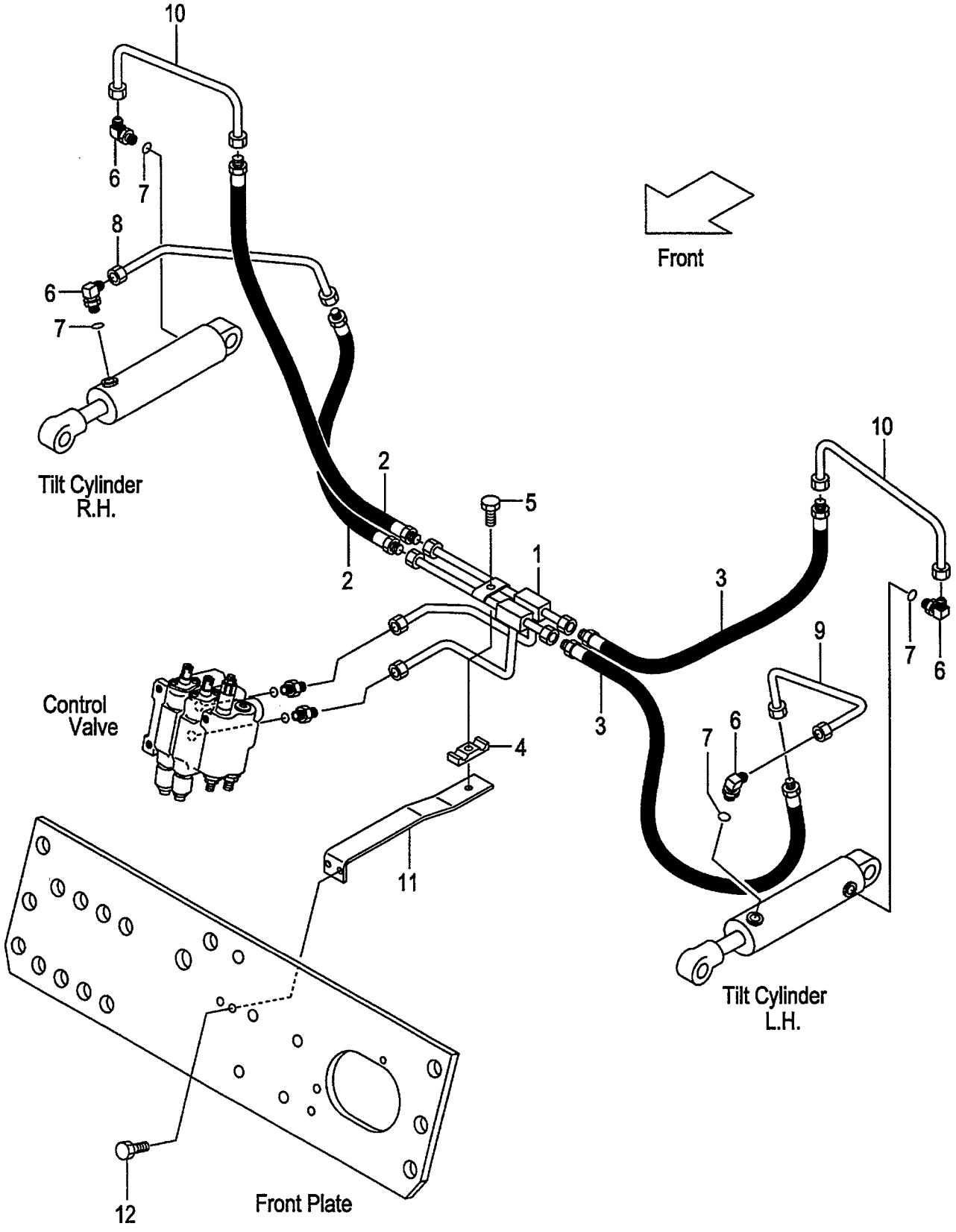

A:FD30C7 FD30T7 FD30W7

Item No	Part No.	Mark	Description		Req'd	Remarks : Serial No.
1	239A7-62112		PIPE,TILT	ﾊﾟｲﾌﾟ	1	
2	239A7-62251		HOSE,TILT,RH	ﾎｰｽ	2	
3	239A7-62261		HOSE,TILT,LH	ﾎｰｽ	2	
4	239A7-62351		RUBBER,TILT-PIPE	ﾗﾊﾞｰ	1	
5	01183-08025		BOLT	ﾎﾞﾙﾄ	1	
A1	277H7-60501		ELBOW-ASSY	ｴﾙﾎﾞｱｯｾﾝ	4	INC.6,7
6	NO PART NO.	#	ELBOW	ｴﾙﾎﾞ	4	
7	03320-00110		O-RING	Oﾘﾝｸﾞ	4	
8	239A7-62211		PIPE,RH,TILT-FRONT	ﾊﾟｲﾌﾟ	1	
9	239A7-62121		PIPE,LH,TILT-FRONT	ﾊﾟｲﾌﾟ	1	
10	239A7-62131		PIPE,TILT-REAR	ﾊﾟｲﾌﾟ	2	
11	239A7-62401		BRACKET,TILT-PIPE	ﾌﾞﾗｹｯﾄ	1	
12	01183-08020		BOLT	ﾎﾞﾙﾄ	2	

FIG.170 HYDRAULIC LINE (TOR-CON)

(F6037690) ﾊｲﾄﾞﾛﾘｯｸﾗｲﾝ(ﾄﾙｺﾝ)

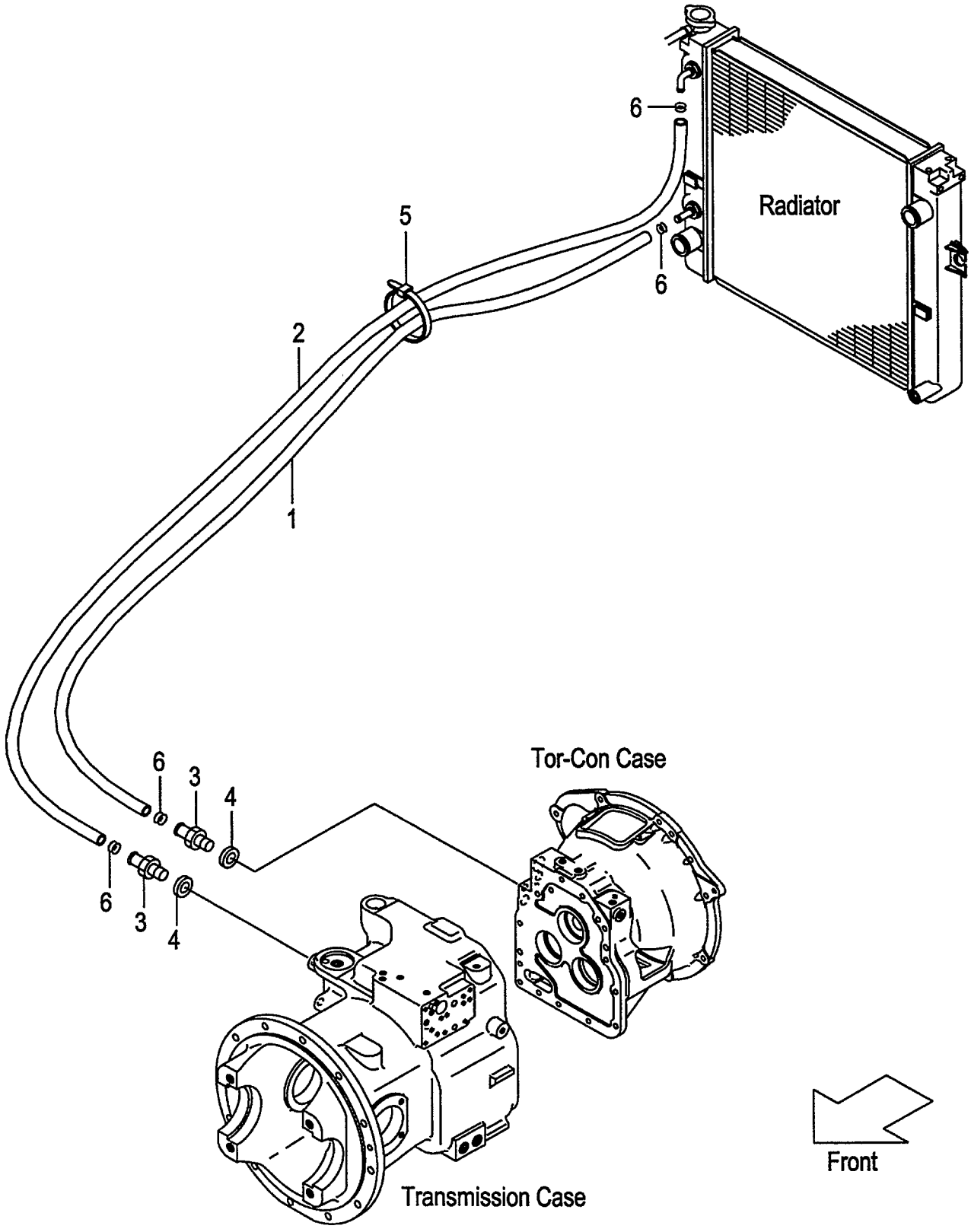

A:FD30T7

Item No	Part No.	Mark	Description		Req'd	Remarks : Serial No.
1	216H7-82111		HOSE,OIL-COOLER	ﾎｰｽ	1	
2	234B7-82111		HOSE,OIL-COOLER	ﾎｰｽ	1	
3	228U7-62221		NIPPLE	ﾆｯﾌﾟﾙ	2	
4	20802-51301		PACKING	ﾊﾟｯｷﾝｸﾞ	2	
-	23467-82041		PACKING	ﾊﾟｯｷﾝｸﾞ	2	(NO CONTROL NO.)
5	04913-20380		BAND	ﾊﾞﾝﾄﾞ	1	
6	25787-82081		CLIP	ｸﾘｯﾌﾟ	4	

FIG.171 HYDRAULIC LINE (OIL CLUTCH)

(F60376D0) ハイドロリックライン(オイルクラッチ)

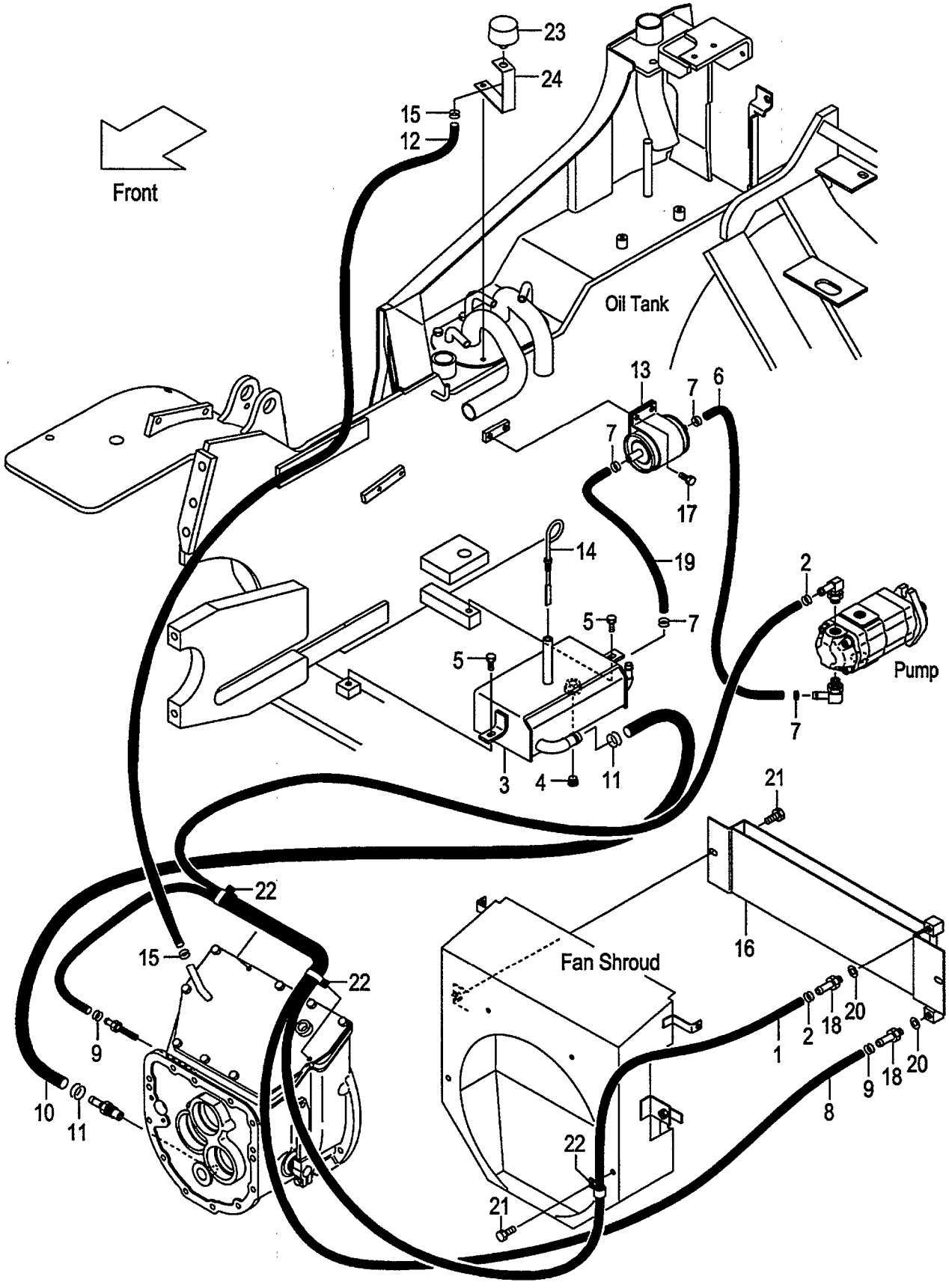

A:FD30W7

Item No	Part No.	Mark	Description		Req'd	Remarks : Serial No.
1	239H7-82001		HOSE,OIL-COOLER	ﾎｰｽ	1	
2	229G7-82051		CLIP,HOSE	ｸﾘｯﾌﾟ	2	
3	234H7-60104		TANK,OIL	ﾀﾝｸ	1	
4	04000-00300		PLUG	ﾌﾟﾗｸﾞ	1	
5	01183-08020		BOLT	ﾎﾞﾙﾄ	2	
6	04710-04060		HOSE	ﾎｰｽ	1	
7	04911-00021		CLIP	ｸﾘｯﾌﾟ	4	
8	229G7-82011		HOSE,OIL-COOLER	ﾎｰｽ	1	
9	229G7-82051		CLIP,HOSE	ｸﾘｯﾌﾟ	2	
10	234H7-62291		HOSE	ﾎｰｽ	1	
11	04911-00032		CLIP	ｸﾘｯﾌﾟ	2	
12	04710-04040		HOSE	ﾎｰｽ	1	
13	234H7-62171		FILTER	ﾌｲﾙﾀ	1	
14	27717-52081		GAUGE,OIL-LEVEL	ｹﾞｰｼﾞ	1	
15	04914-00019		CLIP	ｸﾘｯﾌﾟ	2	
16	217W2-10001		COOLER,OIL	ｸｰﾗ	1	
17	01185-08016		BOLT	ﾎﾞﾙﾄ	2	
18	229G7-82101		NIPPLE	ﾆｯﾌﾟﾙ	2	
19	04710-04050		HOSE	ﾎｰｽ	1	
20	23467-82041		PACKING	ﾊﾟｯｷﾝｸﾞ	2	
21	01186-10016		BOLT	ﾎﾞﾙﾄ	3	
22	25957-62201		CLIP	ｸﾘｯﾌﾟ	3	
23	216G7-52201		CAP,BREATHER	ｷｬｯﾌﾟ	1	
24	216G7-52121		BRACKET,AIR-BREATHER	ﾌﾞﾗｹｯﾄ	1	

FIG.172 TILT CYLINDER

(F6038510) ﾃｨﾙﾄｼﾘﾝﾀﾞ

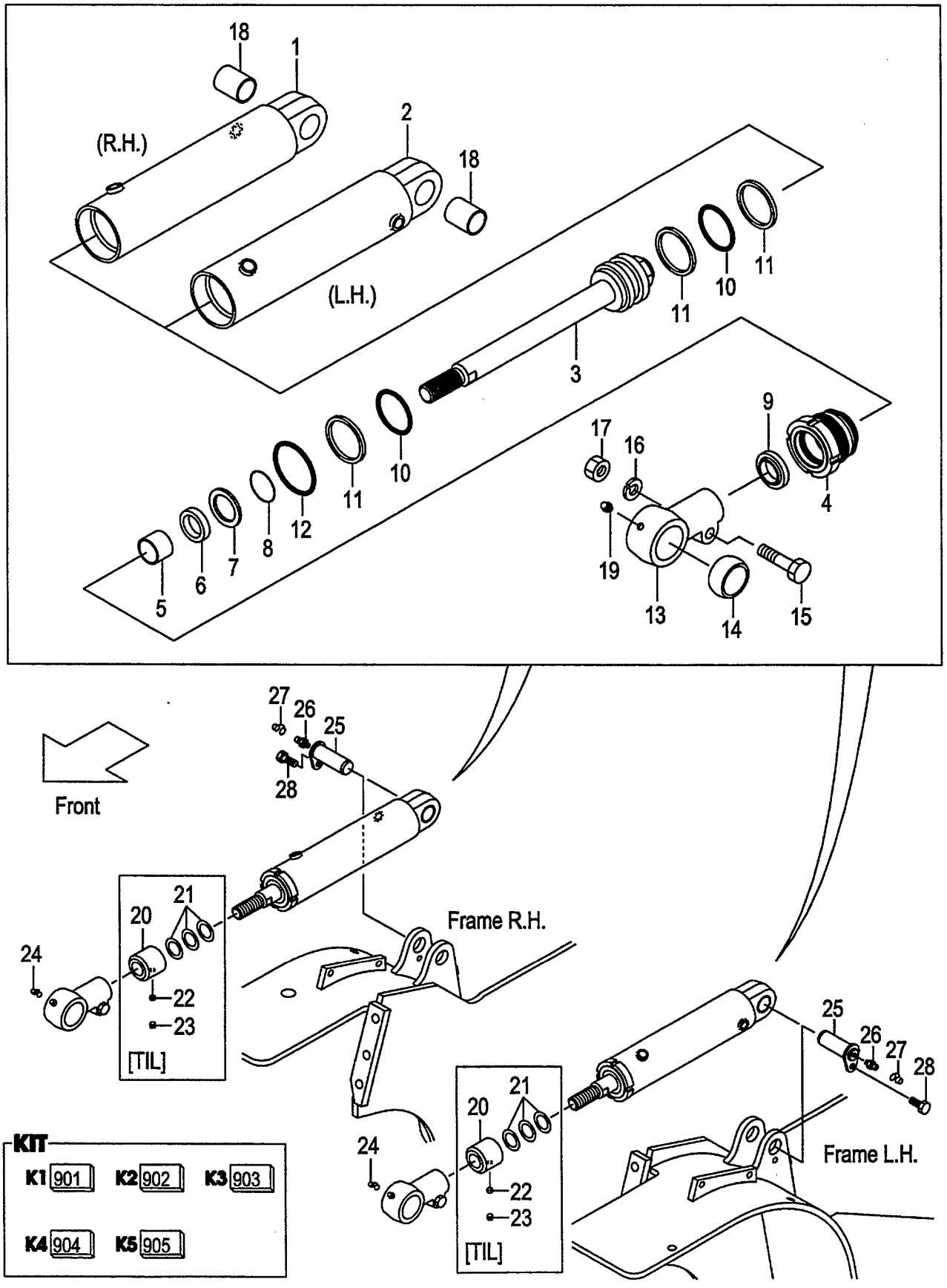

A:FD30C7 FD30T7 FD30W7

Item No	Part No.	Mark	Description		Req'd	Remarks : Serial No.
A1	234A8-50103		CYL-ASSY,TILT,RH	ﾃｨﾙﾄｼﾘﾝﾀﾞｱｯｾﾝ	1	INC.1,3-19
A2	234A8-50113		CYL-ASSY,TILT,LH	ﾃｨﾙﾄｼﾘﾝﾀﾞｱｯｾﾝ	1	INC.2-19
901	B-3070A-00103	K1	KIT,REPAIR	ﾘﾍﾟｱｷｯﾄ	2	INC.6,9-12
902	B-B670B-00086	K2	KIT,CYL-TUBE,RH	ｼﾘﾝﾀﾞﾁｭｰﾌﾞｷｯﾄ	1	INC.1,18
903	B-B670B-00087	K3	KIT,CYL-TUBE,LH	ｼﾘﾝﾀﾞﾁｭｰﾌﾞｷｯﾄ	1	INC.2,18
904	B-3065B-00211	K4	KIT,ROD-HEAD	ﾛｯﾄﾞﾍｯﾄﾞｷｯﾄ	2	INC.13,14
905	B-3070B-00217	K5	KIT,CYL-HEAD	ｼﾘﾝﾀﾞﾍｯﾄﾞｷｯﾄ	2	INC.4,5
1	NO PART NO.	#*	TUBE,CYL,RH	ﾁｭｰﾌﾞ	1	
2	NO PART NO.	#*	TUBE,CYL,LH	ﾁｭｰﾌﾞ	1	
3	B-B6127-20612		ROD,PISTON	ﾛｯﾄﾞ	2	
4	NO PART NO.	#*	HEAD,CYL	ﾍｯﾄﾞ	2	
5	B-96401-30159	*	BUSHING	ﾌﾞｯｼﾝｸﾞ	2	
6	B-30961-03012	*	U-RING	Uﾘﾝｸﾞ	2	
7	B-30151-03006		SPACER	ｽﾍﾟｰｻ	2	
8	B-30141-35012		RING,SNAP	ｽﾅｯﾌﾟﾘﾝｸﾞ	2	
9	B-30191-30025	*	RING,WIPER	ﾘﾝｸﾞ	2	
10	B-95112-06000	*	O-RING	Oﾘﾝｸﾞ	4	
11	B-95713-06000	*	RING,BACK-UP	ﾘﾝｸﾞ	6	
12	B-95121-07000	*	O-RING	Oﾘﾝｸﾞ	2	
13	NO PART NO.	#*	HEAD,ROD	ﾍｯﾄﾞ	2	
14	B-30431-35009	*	BUSHING,PIN	ﾌﾞｯｼﾝｸﾞ	2	
15	B-B6341-01401		BOLT	ﾎﾞﾙﾄ	2	
16	B-30311-01403		WASHER	ﾜｯｼｬ	2	
17	B-B6351-01401		NUT	ﾅｯﾄ	2	
18	B-30421-30005	*	BUSHING,PIN	ﾌﾞｯｼﾝｸﾞ	2	
19	B-96111-10613		NIPPLE,GREASE	ﾆｯﾌﾟﾙ	2	
20	234A8-52162		SPACER,L=156	ｽﾍﾟｰｻ	2	[TIL013](3-3 DEG.)
-	215B8-52022		SPACER,L=129	ｽﾍﾟｰｻ	2	[TIL014][TIL016] (3-6,6-6 DEG.)
-	234A8-52172		SPACER,L=93	ｽﾍﾟｰｻ	2	[TIL017](6-10 DEG.)
21	23658-52101		SHIM	ｼﾑ	6	[TIL013][TIL014] (3-3,3-6 DEG.)
-	23658-52101		SHIM	ｼﾑ	6	[TIL016][TIL017] (6-6,6-10 DEG.)
22	01066-10012		SCREW,SET	ｽｸﾘｭｾｯﾄ	2	[TIL013][TIL014] (3-3,3-6 DEG.)
-	01066-10012		SCREW,SET	ｽｸﾘｭｾｯﾄ	2	[TIL016][TIL017] (6-6,6-10 DEG.)
23	23658-52401		PLUG,NYLON	ﾌﾟﾗｸﾞ	2	[TIL013][TIL014] (3-3,3-6 DEG.)
-	23658-52401		PLUG,NYLON	ﾌﾟﾗｸﾞ	2	[TIL016][TIL017] (6-6,6-10 DEG.)
24	22199-12401		CAP,NIPPLE	ｷｬｯﾌﾟ	2	
25	216G8-52201		PIN	ﾋﾟﾝ	2	
26	04901-00100		FITTING	ﾌｨｯﾃｨﾝｸﾞ	2	
27	22199-12401		CAP,NIPPLE	ｷｬｯﾌﾟ	2	
28	216G8-52301		BOLT & WASHER	ﾎﾞﾙﾄ&ﾜｯｼｬ	2	

FIG.173 TILT BOOT [TLB][FC]

(F6038520) ﾃｨﾙﾄﾌﾞｰﾂ

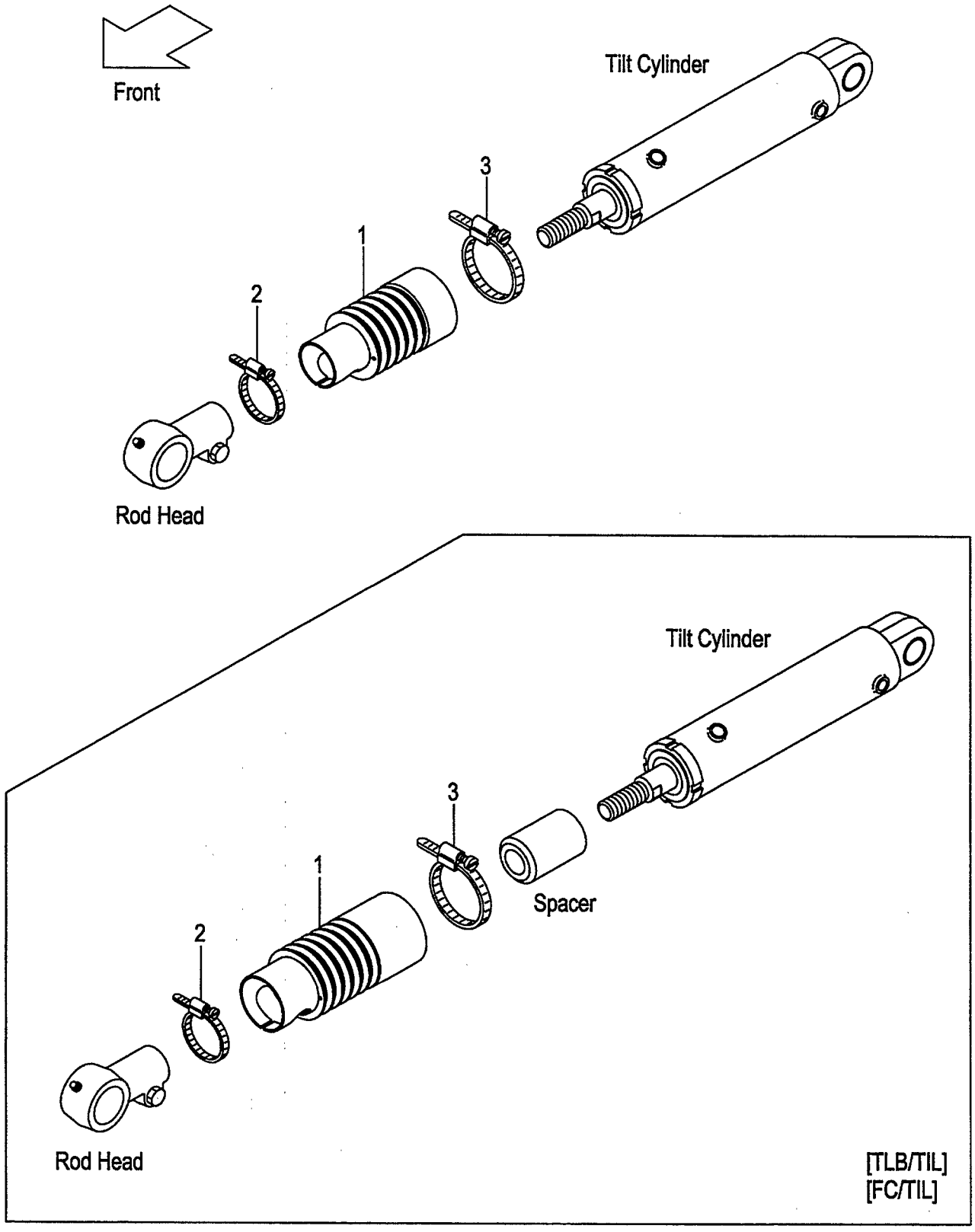

A:FD30C7 FD30T7 FD30W7

Item No	Part No.	Mark	Description		Req'd	Remarks : Serial No.
A1	231A8-51001		BOOT-ASSY,TILT-CYL	ﾌﾞｰﾂｱｯｾﾝ	2	[TLB][FC](6-12 DEG.) INC.1-3
-	231A8-51011		BOOT-ASSY,TILT-CYL	ﾌﾞｰﾂｱｯｾﾝ	2	[TLB/TIL013&014] (3-3,3-6 DEG.) INC.1-3
-	231A8-51011		BOOT-ASSY,TILT-CYL	ﾌﾞｰﾂｱｯｾﾝ	2	[TLB/TIL016&017] (6-6,6-10 DEG.) INC.1-3
-	231A8-51011		BOOT-ASSY,TILT-CYL	ﾌﾞｰﾂｱｯｾﾝ	2	[FC/TIL013&014](3-3,3-6 DEG.) INC.1-3
-	231A8-51011		BOOT-ASSY,TILT-CYL	ﾌﾞｰﾂｱｯｾﾝ	2	[FC/TIL016&017] (6-6,6-10 DEG.) INC.1-3
1	23678-53001		BOOT,TILT-CYL	ﾌﾞｰﾂ	2	[TLB][FC](6-12 DEG.)
-	23678-53101		BOOT,TILT-CYL	ﾌﾞｰﾂ	2	[TLB/TIL013&014] [FC/TIL013&014](3-3,3-6 DEG.)
-	23678-53101		BOOT,TILT-CYL	ﾌﾞｰﾂ	2	[TLB/TIL016&017] [FC/TIL016&017] (6-6,6-10 DEG.)
2	216G8-53001		BAND,50	ﾊﾞﾝﾄﾞ	2	[TLB][FC]
-	216G8-53011		BAND,55	ﾊﾞﾝﾄﾞ	(2)	[TLB][FC]
3	216G8-53051		BAND,90	ﾊﾞﾝﾄﾞ	2	[TLB][FC]
-	224T8-53011		BAND,95	ﾊﾞﾝﾄﾞ	(2)	[TLB][FC]

FIG.174 DECAL (1/2)

(F6039110) ﾃﾞｶﾙ(1/2)

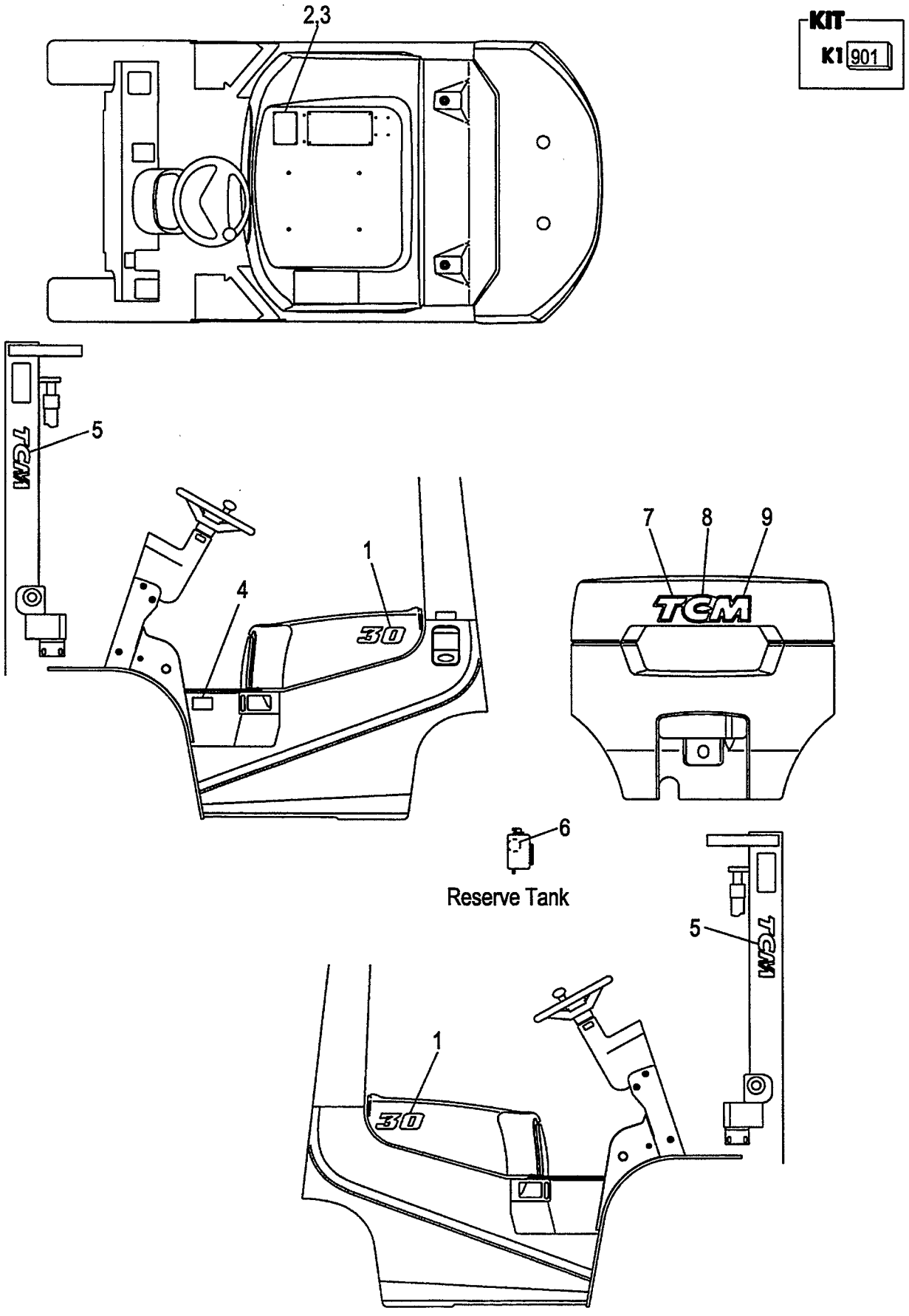

A:FD30C7 FD30T7
B:FD30W7

FIG.174
(F6039110)

Item No	Part No.	Mark	Description		Req'd	Remarks : Serial No.
901	236A9-19801	K1	KIT,DECAL	ﾃﾞｶﾙｷｯﾄ	1	INC.4-6 & FIG.175:3-9,12,13
-	236A9-19811	K1	KIT,DECAL	ﾃﾞｶﾙｷｯﾄ	1	A [EXB/ENGLISH] INC.4-6 & FIG.176:3-9,16,17
-	236A9-19811	K1	KIT,DECAL	ﾃﾞｶﾙｷｯﾄ	1	A [EXC] INC.4-6 & FIG.177:3-9,12,13
-	236A9-19811	K1	KIT,DECAL	ﾃﾞｶﾙｷｯﾄ	1	A [EXE/ENGLISH] INC.4-6 & FIG.178:3-9,13,14
-	236A9-19811	K1	KIT,DECAL	ﾃﾞｶﾙｷｯﾄ	1	A [EXK] INC.4-6 & FIG.179:3-9,12,13
-	236A9-19811	K1	KIT,DECAL	ﾃﾞｶﾙｷｯﾄ	1	A [EXN/ENGLISH] INC.4-6 & FIG.180:3-9,13,14
1	239F9-12001		DECAL,MODEL-MARK,30	ﾃﾞｶﾙ	2	
-	239F9-12011		DECAL,MODEL-MARK,30	ﾃﾞｶﾙ	2	[PCL]
2	239F9-12101		CHART,CAPACITY,3.0T	ﾁｬｰﾄ	1	(VM200-500)
-	222Q9-12011		CHART,CAPACITY,3.0T	ﾁｬｰﾄ	1	(VM550-600)
-	514A3-82331		CHART,CAPACITY	ﾁｬｰﾄ	1	A [EXB/SPANISH][EXE/SPANISH]
-	514A3-82341		CHART,CAPACITY	ﾁｬｰﾄ	1	A [EXB/FRENCH][EXE/FRENCH]
-	63110-18921		CHART,CAPACITY,3.0T	ﾁｬｰﾄ	1	A [EXB/CHINESE](VM200-500)
-	522Q2-82051		CHART,CAPACITY,3.0T	ﾁｬｰﾄ	1	A [EXB/CHINESE](VM550-600)
-	524T3-84031		CHART,CAPACITY,3.0T	ﾁｬｰﾄ	1	A [EXB/RUSSIA](VM200-500)
-	225T9-12011		CHART,CAPACITY,3.0T	ﾁｬｰﾄ	1	A [EXB/RUSSIA](VM550-600)
-	63110-18901		CHART,CAPACITY,3.0T	ﾁｬｰﾄ	1	A [EXC]
-	514A3-82301		CHART,CAPACITY	ﾁｬｰﾄ	1	A [EXE/ENGLISH][EXN/ENGLISH]
-	514A3-82321		CHART,CAPACITY	ﾁｬｰﾄ	1	A [EXE/GERMAN]
-	514A3-82351		CHART,CAPACITY	ﾁｬｰﾄ	1	A [EXE/DUTCH]
-	514A3-82361		CHART,CAPACITY	ﾁｬｰﾄ	1	A [EXE/DANISH][EXN/DANISH]
-	514A3-82371		CHART,CAPACITY	ﾁｬｰﾄ	1	A [EXE/ITALIAN]
-	514A3-82381		CHART,CAPACITY	ﾁｬｰﾄ	1	A [EXE/GREEK]
-	514A3-82391		CHART,CAPACITY	ﾁｬｰﾄ	1	A [EXE/PORTUGUESE]
-	529F3-82111		CHART,CAPACITY	ﾁｬｰﾄ	1	A [EXN/SWEDISH]

FIG.174 DECAL (1/2)

(F6039110) ﾃﾞｶﾙ(1/2)

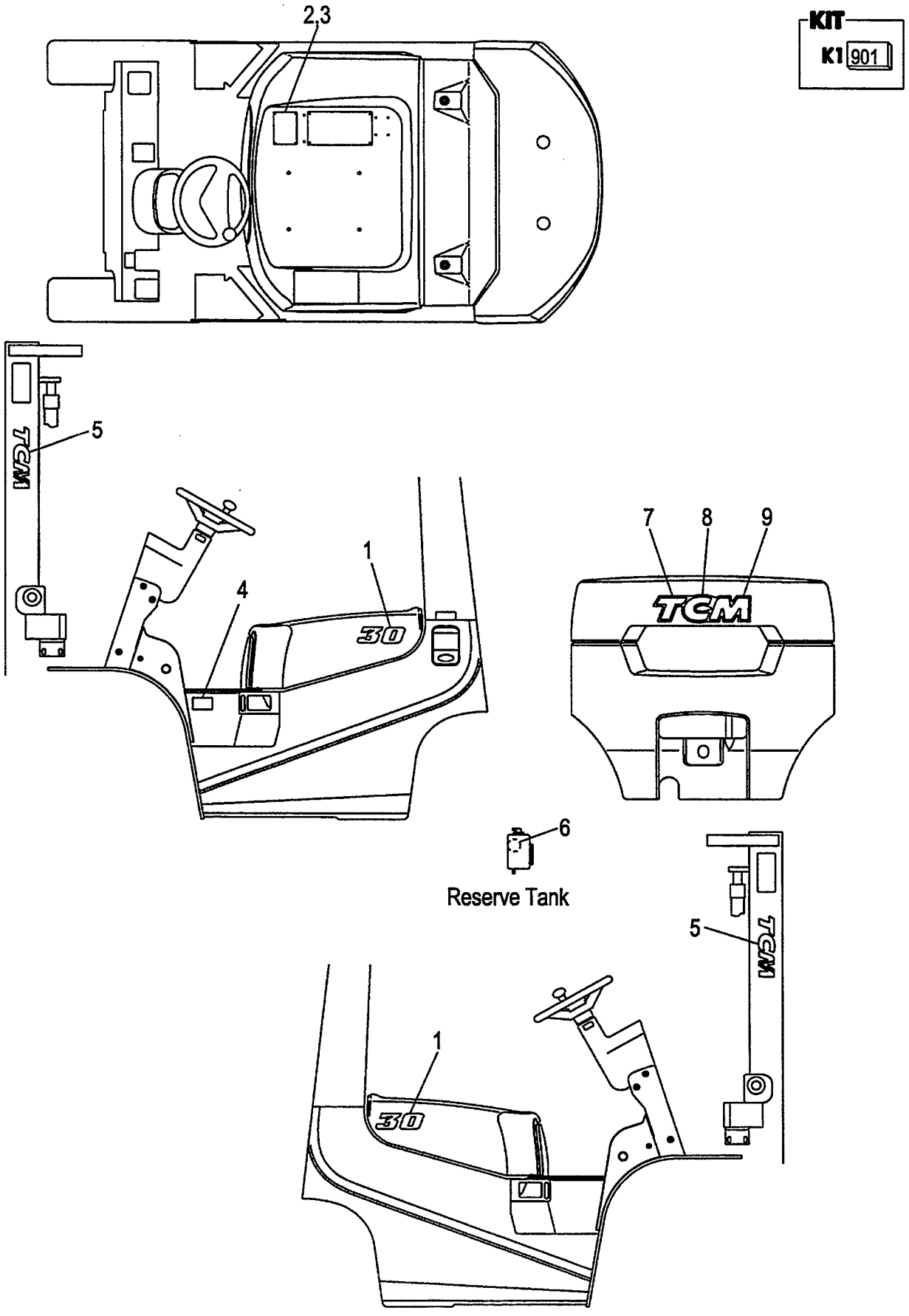

A:FD30C7 FD30T7
B:FD30W7

FIG.174
(F6039110)

Item No	Part No.	Mark	Description		Req'd	Remarks : Serial No.
-	529F3-82101		CHART,CAPACITY	ﾁｬｰﾄ	1	A [EXN/FINNISH]
3	02432-01008		RIVET	ﾘﾍﾞｯﾄ	4	
4	27049-12172	*	DECAL,AIR-PRESSURE	ﾃﾞｶﾙ	1	
-	225R9-12142		DECAL,AIR-PRESSURE	ﾃﾞｶﾙ	1	A [EXB/RUSSIA]
5	273A9-12242	*	DECAL,TCM	ﾃﾞｶﾙ	2	
6	23659-12101	*	DECAL,L/LIFE-COOLANT	ﾃﾞｶﾙ	1	
-	522A3-82641		DECAL,L/LIFE-COOLANT	ﾃﾞｶﾙ	1	A [EXB/SPANISH][EXE/SPANISH]
-	522A3-82841		DECAL,L/LIFE-COOLANT	ﾃﾞｶﾙ	1	A [EXB/FRENCH][EXE/FRENCH]
-	232W9-12051		DECAL,L/LIFE-COOLANT	ﾃﾞｶﾙ	1	A [EXB/RUSSIA]
-	522A3-82441		DECAL,L/LIFE-COOLANT	ﾃﾞｶﾙ	1	A [EXE/GERMAN]
-	522A3-83041		DECAL,L/LIFE-COOLANT	ﾃﾞｶﾙ	1	A [EXE/DUTCH]
-	522A3-83241		DECAL,L/LIFE-COOLANT	ﾃﾞｶﾙ	1	A [EXE/DANISH][EXN/DANISH]
-	522A3-83441		DECAL,L/LIFE-COOLANT	ﾃﾞｶﾙ	1	A [EXE/ITALIAN]
-	522A3-83641		DECAL,L/LIFE-COOLANT	ﾃﾞｶﾙ	1	A [EXE/GREEK]
-	522A3-83841		DECAL,L/LIFE-COOLANT	ﾃﾞｶﾙ	1	A [EXE/PORTUGUESE]
-	529F3-82091		DECAL,L/LIFE-COOLANT	ﾃﾞｶﾙ	1	A [EXN/SWEDISH]
-	529F3-82081		DECAL,L/LIFE-COOLANT	ﾃﾞｶﾙ	1	A [EXN/FINNISH]
7	216G9-12013		DECAL,B/WEIGHT,T	ﾃﾞｶﾙ	1	
8	216G9-12023		DECAL,B/WEIGHT,C	ﾃﾞｶﾙ	1	
9	216G9-12033		DECAL,B/WEIGHT,M	ﾃﾞｶﾙ	1	

FIG.175 DECAL (2/2)

(F6039120) ﾃﾞｶﾙ(2/2)

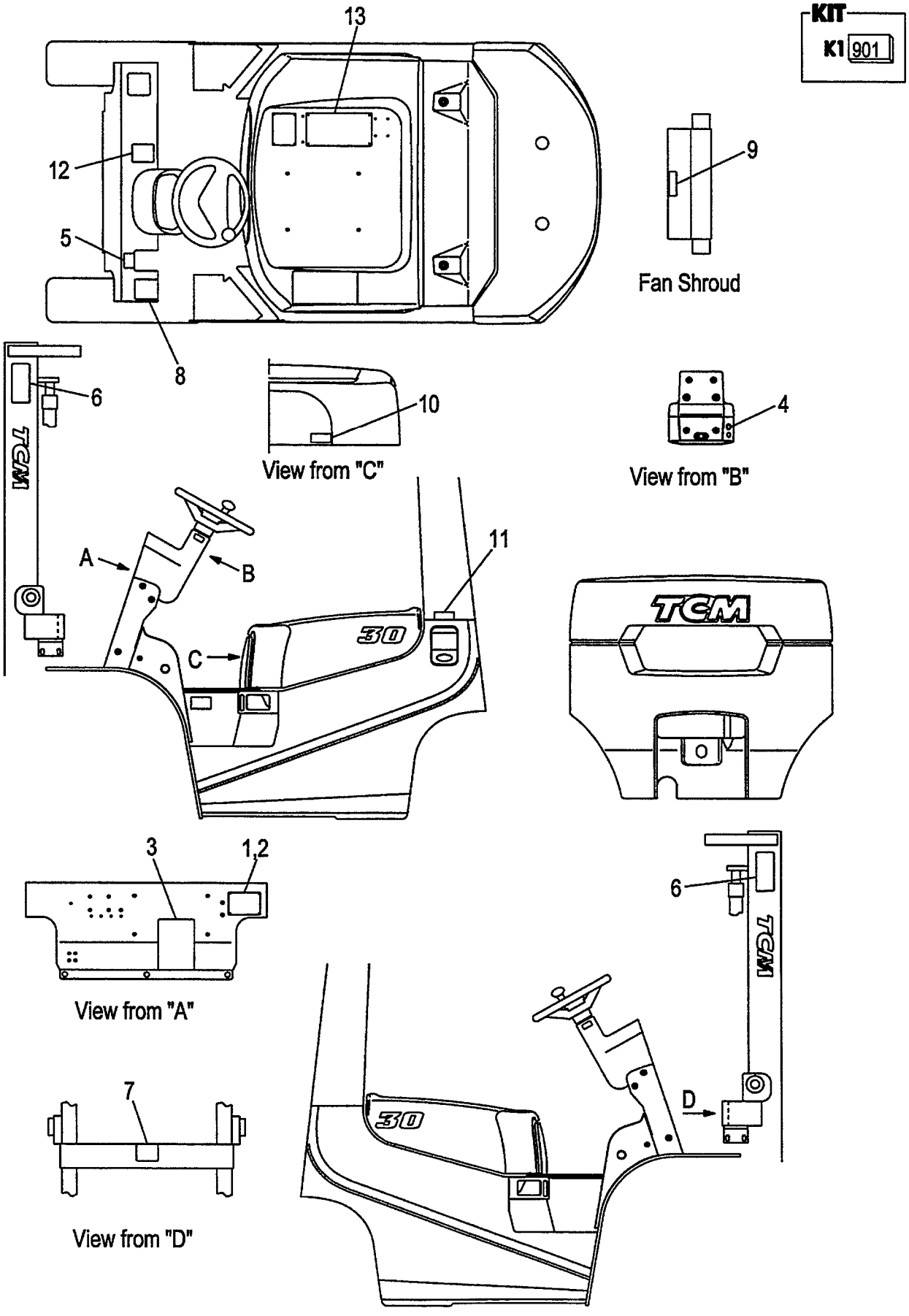

A:FD30C7 FD30T7 FD30W7

Item No	Part No.	Mark	Description		Req'd	Remarks : Serial No.
901	236A9-19801	K1	KIT,DECAL	ﾃﾞｶﾙｷｯﾄ	1	INC.3-9,12,13 & FIG.174:4-6
1	NO PART NO.	#	PLATE,NAME	ﾌﾟﾚｰﾄ	1	
2	216G9-12131		RIVET	ﾘﾍﾞｯﾄ	4	
3	25789-12051	*	DECAL,LUBRICATION	ﾃﾞｶﾙ	1	
4	216G9-12071	*	DECAL,STARTER-SWITCH	ﾃﾞｶﾙ	1	
5	214A5-53012	*	DECAL,BRAKE-LEVER	ﾃﾞｶﾙ	1	
6	27419-12062	*	DECAL,MAST-CAUTION	ﾃﾞｶﾙ	2	
7	27419-12072	*	DECAL,CROSS-BEAM	ﾃﾞｶﾙ	1	
8	216G9-12062	*	DECAL,TIRE-CAUTION	ﾃﾞｶﾙ	1	
9	216G9-12052	*	DECAL,FAN-CAUTION	ﾃﾞｶﾙ	1	
10	238F9-12071		DECAL,FUEL-CAPACITY	ﾃﾞｶﾙ	1	
11	21159-12501		DECAL,LIGHT-OIL	ﾃﾞｶﾙ	1	
12	271A9-12251	*	DECAL,CAUTION	ﾃﾞｶﾙ	1	
13	239A9-12301	*	DECAL,WARNING-PLATE	ﾃﾞｶﾙ	1	

FIG.176 DECAL (2/2)[EXB]

(F60391B0) ﾃﾞｶﾙ(2/2)

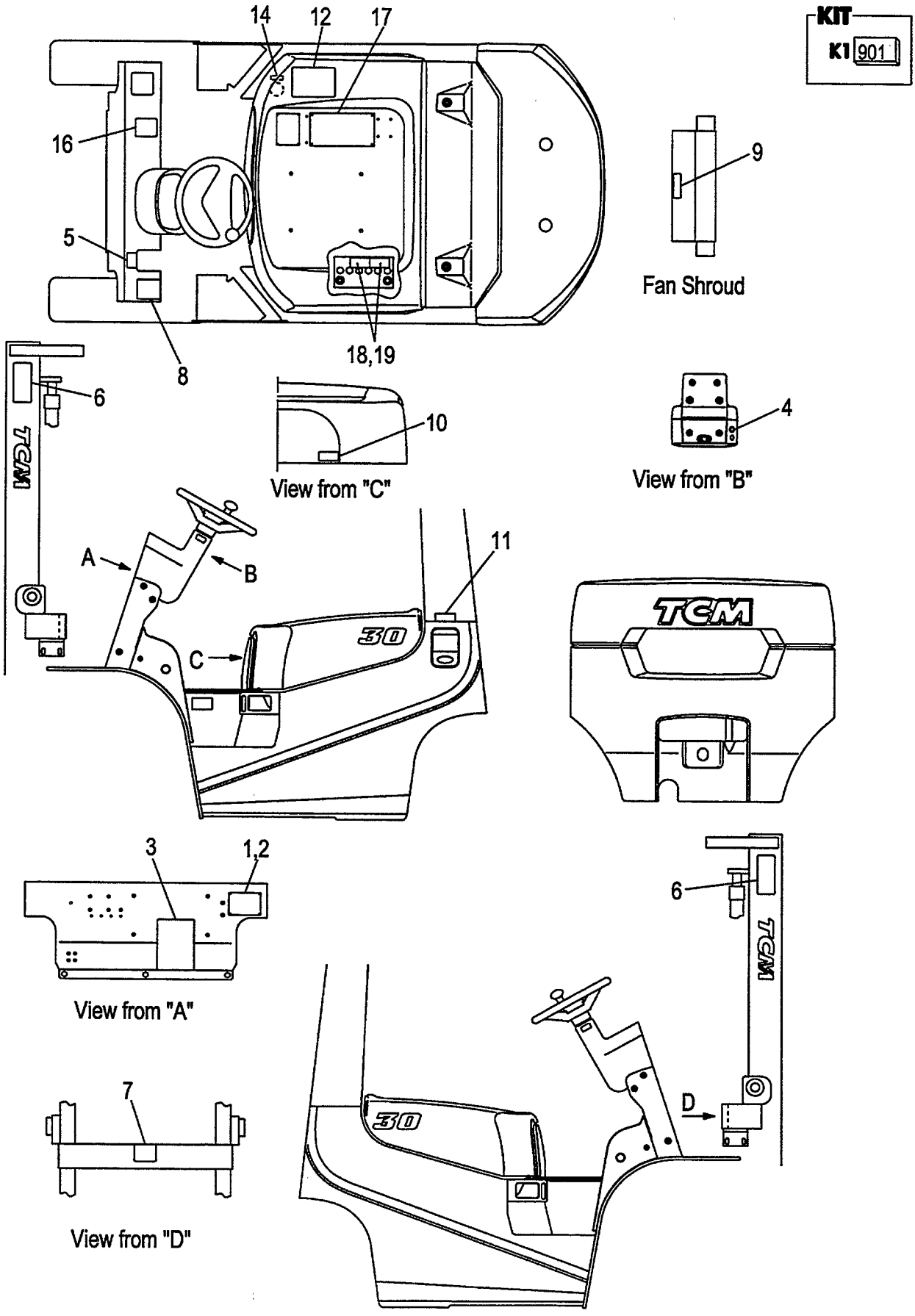

A:FD30C7
B:FD30T7

FIG.176
(F60391B0)

Item No	Part No.	Mark	Description		Req'd	Remarks : Serial No.
901	236A9-19811	K1	KIT,DECAL	ﾃﾞｶﾙｷｯﾄ	1	[EXB/ENGLISH]
						INC.3-9,16,17 & FIG.174:4-6
1	NO PART NO.	#	PLATE,NAME	ﾌﾟﾚｰﾄ	1	[EXB/ENGLISH]
-	NO PART NO.	#	PLATE,NAME	ﾌﾟﾚｰﾄ	1	[EXB/SPANISH]
-	NO PART NO.	#	PLATE,NAME	ﾌﾟﾚｰﾄ	1	[EXB/FRENCH]
-	NO PART NO.	#	PLATE,NAME	ﾌﾟﾚｰﾄ	1	[EXB/CHINESE]
-	NO PART NO.	#	PLATE,NAME	ﾌﾟﾚｰﾄ	1	[EXB/RUSSIA]
2	216G9-12131		RIVET	ﾘﾍﾞｯﾄ	4	[EXB]
3	52672-72122	*	CHART,LUBRICATION	ﾁｬｰﾄ	1	[EXB/ENGLISH]
-	53652-82352		CHART,LUBRICATION	ﾁｬｰﾄ	1	[EXB/SPANISH]
-	22959-12052		CHART,LUBRICATION	ﾁｬｰﾄ	1	[EXB/FRENCH]
-	52672-82062		CHART,LUBRICATION	ﾁｬｰﾄ	1	[EXB/CHINESE]
-	225R9-12031		CHART,LUBRICATION	ﾁｬｰﾄ	1	[EXB/RUSSIA]
4	216G9-12071	*	DECAL,STARTER-SWITCH	ﾃﾞｶﾙ	1	[EXB]
-	516G3-82011		DECAL,STARTER-SWITCH	ﾃﾞｶﾙ	1	[EXB/SPANISH]
-	232W9-12001		DECAL,STARTER-SWITCH	ﾃﾞｶﾙ	1	[EXB/RUSSIA]
5	514A3-82002	*	DECAL,BRAKE-LEVER	ﾃﾞｶﾙ	1	[EXB/ENGLISH]
-	514A3-82012		DECAL,BRAKE-LEVER	ﾃﾞｶﾙ	1	[EXB/SPANISH]
-	514A3-82022		DECAL,BRAKE-LEVER	ﾃﾞｶﾙ	1	[EXB/FRENCH]
-	514A2-82012		DECAL,BRAKE-LEVER	ﾃﾞｶﾙ	1	[EXB/CHINESE]
-	225R9-12112		DECAL,BRAKE-LEVER	ﾃﾞｶﾙ	1	[EXB/RUSSIA]
6	27419-12061	*	DECAL,MAST-CAUTION	ﾃﾞｶﾙ	2	[EXB]
-	27419-12062		DECAL,MAST-CAUTION	ﾃﾞｶﾙ	2	[EXB/RUSSIA]
7	27419-12071	*	DECAL,CROSS-BEAM	ﾃﾞｶﾙ	1	[EXB]
-	27419-12072		DECAL,CROSS-BEAM	ﾃﾞｶﾙ	1	[EXB/RUSSIA]
8	516G2-72711	*	DECAL,TIRE-CAUTION	ﾃﾞｶﾙ	1	[EXB/ENGLISH]
-	516G3-82211		DECAL,TIRE-CAUTION	ﾃﾞｶﾙ	1	[EXB/SPANISH]
-	516G3-82221		DECAL,TIRE-CAUTION	ﾃﾞｶﾙ	1	[EXB/FRENCH]
-	516G2-82061		DECAL,TIRE-CAUTION	ﾃﾞｶﾙ	1	[EXB/CHINESE]
-	232W9-12021		DECAL,TIRE-CAUTION	ﾃﾞｶﾙ	1	[EXB/RUSSIA]
9	516G2-72701	*	DECAL,FAN-CAUTION	ﾃﾞｶﾙ	1	[EXB/ENGLISH]
-	516G3-82111		DECAL,FAN-CAUTION	ﾃﾞｶﾙ	1	[EXB/SPANISH]
-	516G3-82121		DECAL,FAN-CAUTION	ﾃﾞｶﾙ	1	[EXB/FRENCH]
-	516G2-82051		DECAL,FAN-CAUTION	ﾃﾞｶﾙ	1	[EXB/CHINESE]
-	232W9-12011		DECAL,FAN-CAUTION	ﾃﾞｶﾙ	1	[EXB/RUSSIA]
10	536G2-82181		DECAL,FUEL-CAPACITY	ﾃﾞｶﾙ	1	[EXB/ENGLISH]
-	536G3-82001		DECAL,FUEL-CAPACITY	ﾃﾞｶﾙ	1	[EXB/SPANISH]
-	536G3-82011		DECAL,FUEL-CAPACITY	ﾃﾞｶﾙ	1	[EXB/FRENCH]
-	536G2-82281		DECAL,FUEL-CAPACITY	ﾃﾞｶﾙ	1	[EXB/CHINESE]
-	239T9-12071		DECAL,FUEL-CAPACITY	ﾃﾞｶﾙ	1	[EXB/RUSSIA]
11	522A2-72111		DECAL,LIGHT-OIL	ﾃﾞｶﾙ	1	[EXB/ENGLISH]
-	51152-82022		DECAL,LIGHT-OIL	ﾃﾞｶﾙ	1	[EXB/SPANISH]
-	51152-82012		DECAL,LIGHT-OIL	ﾃﾞｶﾙ	1	[EXB/FRENCH]
-	522A2-82151		DECAL,LIGHT-OIL	ﾃﾞｶﾙ	1	[EXB/CHINESE]
-	225R9-12001		DECAL,LIGHT-OIL	ﾃﾞｶﾙ	1	[EXB/RUSSIA]
12	53652-82551		DECAL,CAUTION	ﾃﾞｶﾙ	1	[EXB/CHINESE]
13	225R9-12091	+	DECAL,BATTERY-SWITCH	ﾃﾞｶﾙ	1	[EXB/RUSSIA]
14	53652-82401		DECAL,OIL	ﾃﾞｶﾙ	1	[EXB/SPANISH]
-	53652-82011		DECAL,OIL	ﾃﾞｶﾙ	1	[EXB/FRENCH]
-	53652-82541		DECAL,OIL	ﾃﾞｶﾙ	1	[EXB/CHINESE]

FIG.176 DECAL (2/2)[EXB]

(F60391B0) ﾃﾞｶﾙ(2/2)

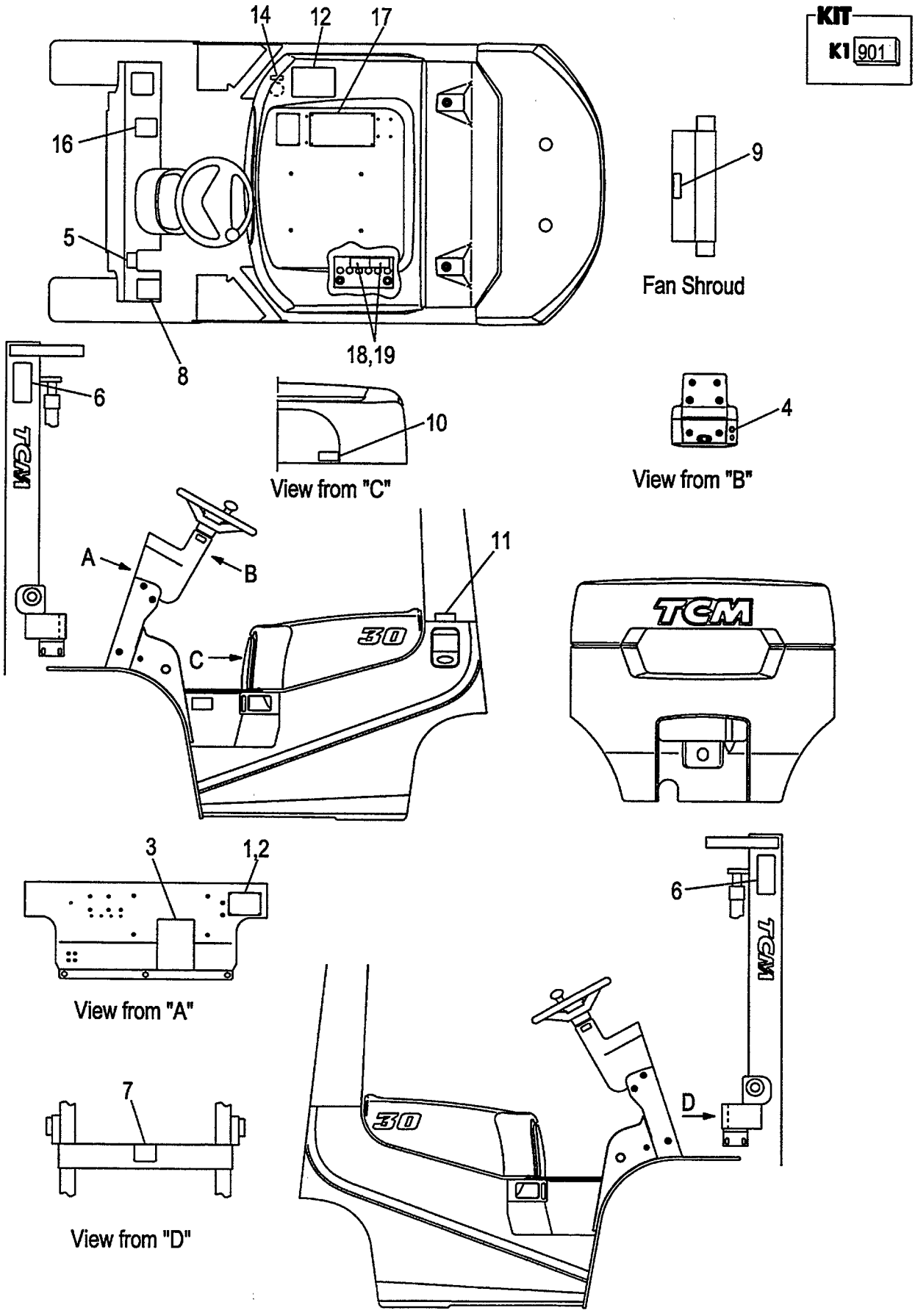

A:FD30C7
B:FD30T7

FIG.176
(F60391B0)

Item No	Part No.	Mark	Description	Req'd	Remarks : Serial No.
-	225R9-12071		DECAL,HYDRAULIC-OIL デカル	1	[EXB/RUSSIA]
15	225R9-12081	+	DECAL,PAN-HEATER-OIL デカル	1	[EXB/RUSSIA]
16	571A3-82361	*	DECAL,CAUTION デカル	1	[EXB]
17	516G3-82801	*	DECAL,CAUTION デカル	1	[EXB/ENGLISH]
-	516G3-82821		DECAL,CAUTION デカル	1	[EXB/SPANISH]
-	516G3-82831		DECAL,CAUTION デカル	1	[EXB/FRENCH]
-	52672-82073		DECAL,WARNING-PLATE デカル	1	[EXB/CHINESE]
-	225R9-12052		DECAL,CAUTION デカル	1	[EXB/RUSSIA]
18	534A3-82311		DECAL,BATTERY,A デカル	1	[EXB/ENGLISH]
-	534A3-82331		DECAL,BATTERY,A デカル	1	[EXB/SPANISH]
-	534A3-82341		DECAL,BATTERY,A デカル	1	[EXB/FRENCH]
-	534A3-82531		DECAL,BATTERY デカル	1	[EXB/CHINESE]
-	232W9-12101		DECAL,BATTERY,A デカル	1	[EXB/RUSSIA]
19	534A3-82421		DECAL,BATTERY,B デカル	1	[EXB/ENGLISH]
					(WITHOUT EXB/CHINESE)
-	534A3-82441		DECAL,BATTERY,B デカル	1	[EXB/SPANISH]
-	534A3-82451		DECAL,BATTERY,B デカル	1	[EXB/FRENCH]
-	232W9-12111		DECAL,BATTERY,B デカル	1	[EXB/RUSSIA]
20	55592-82001	+	DECAL,CERTIFICATE デカル	1	[EXB]

FIG.177 DECAL (2/2)[EXC]

(F60391C0) ﾃﾞｶﾙ(2/2)

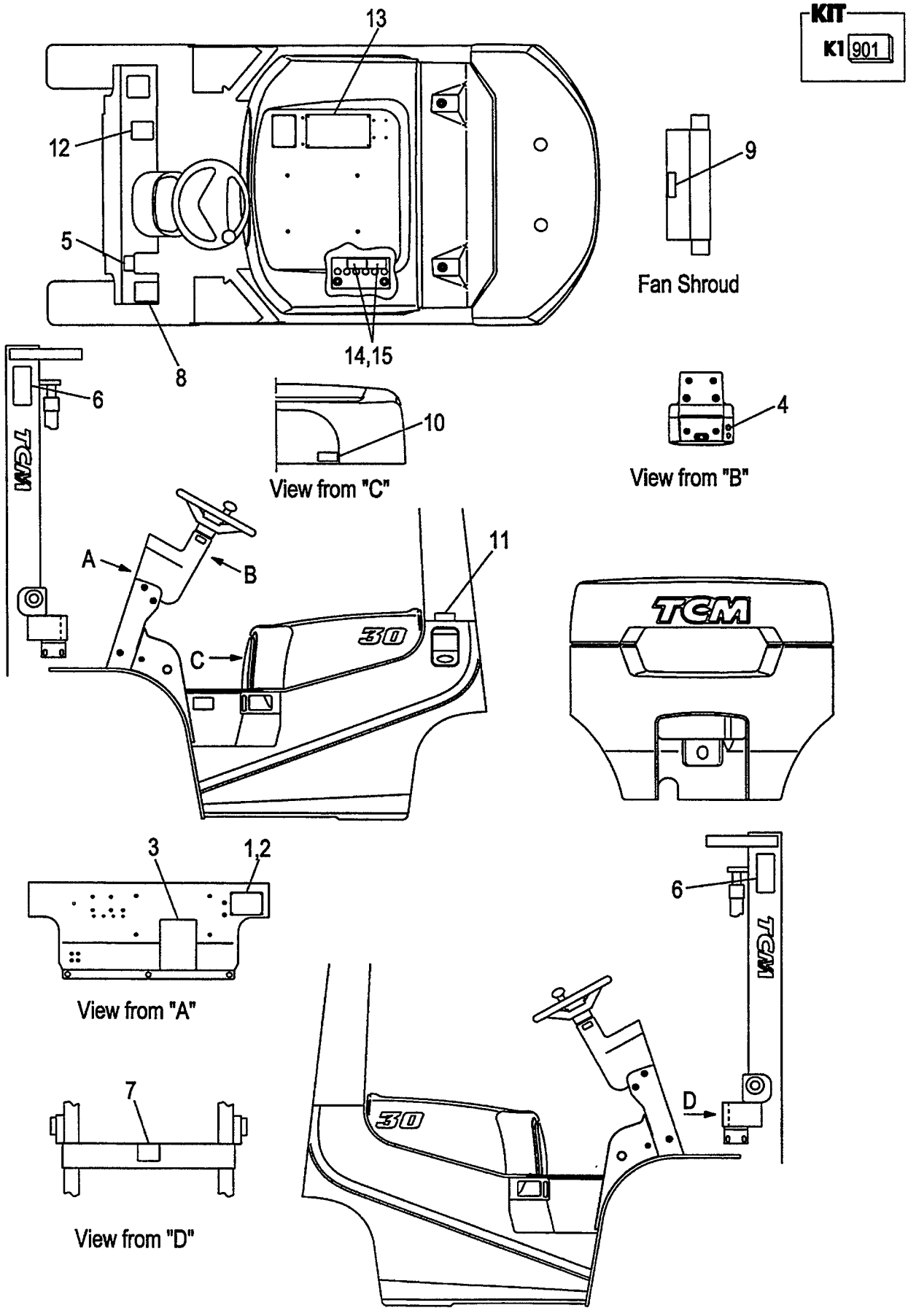

A:FD30C7
B:FD30T7

FIG.177
(F60391C0)

Item No	Part No.	Mark	Description		Req'd	Remarks : Serial No.
901	236A9-19811	K1	KIT,DECAL	ﾃﾞｶﾙｷｯﾄ	1	[EXC]
						INC.3-9,12,13 & FIG.174:4-6
1	NO PART NO.	#	PLATE,NAME	ﾌﾟﾚｰﾄ	1	[EXC]
2	216G9-12131		RIVET	ﾘﾍﾞｯﾄ	4	[EXC]
3	52672-72122	*	CHART,LUBRICATION	ﾁｬｰﾄ	1	[EXC]
4	216G9-12071		DECAL,STARTER-SWITCH	ﾃﾞｶﾙ	1	[EXC]
5	514A3-82002	*	DECAL,BRAKE-LEVER	ﾃﾞｶﾙ	1	[EXC]
6	27419-12061	*	DECAL,MAST-CAUTION	ﾃﾞｶﾙ	2	[EXC]
7	27419-12071	*	DECAL,CROSS-BEAM	ﾃﾞｶﾙ	1	[EXC]
8	516G2-72711	*	DECAL,TIRE-CAUTION	ﾃﾞｶﾙ	1	[EXC]
9	516G2-72701	*	DECAL,FAN-CAUTION	ﾃﾞｶﾙ	1	[EXC]
10	536G2-82181		DECAL,FUEL-CAPACITY	ﾃﾞｶﾙ	1	[EXC]
11	522A2-72111		DECAL,LIGHT-OIL	ﾃﾞｶﾙ	1	[EXC]
12	571A3-82361	*	DECAL,CAUTION	ﾃﾞｶﾙ	1	[EXC]
13	516G3-82801	*	DECAL,CAUTION	ﾃﾞｶﾙ	1	[EXC]
14	534A3-82311		DECAL,BATTERY,A	ﾃﾞｶﾙ	1	[EXC]
15	534A3-82421		DECAL,BATTERY,B	ﾃﾞｶﾙ	1	[EXC]
16	55592-82001	+	DECAL,CERTIFICATE	ﾃﾞｶﾙ	1	[EXC]

FIG.178 DECAL (2/2)[EXE]

(F60391E0) ﾃﾞｶﾙ(2/2)

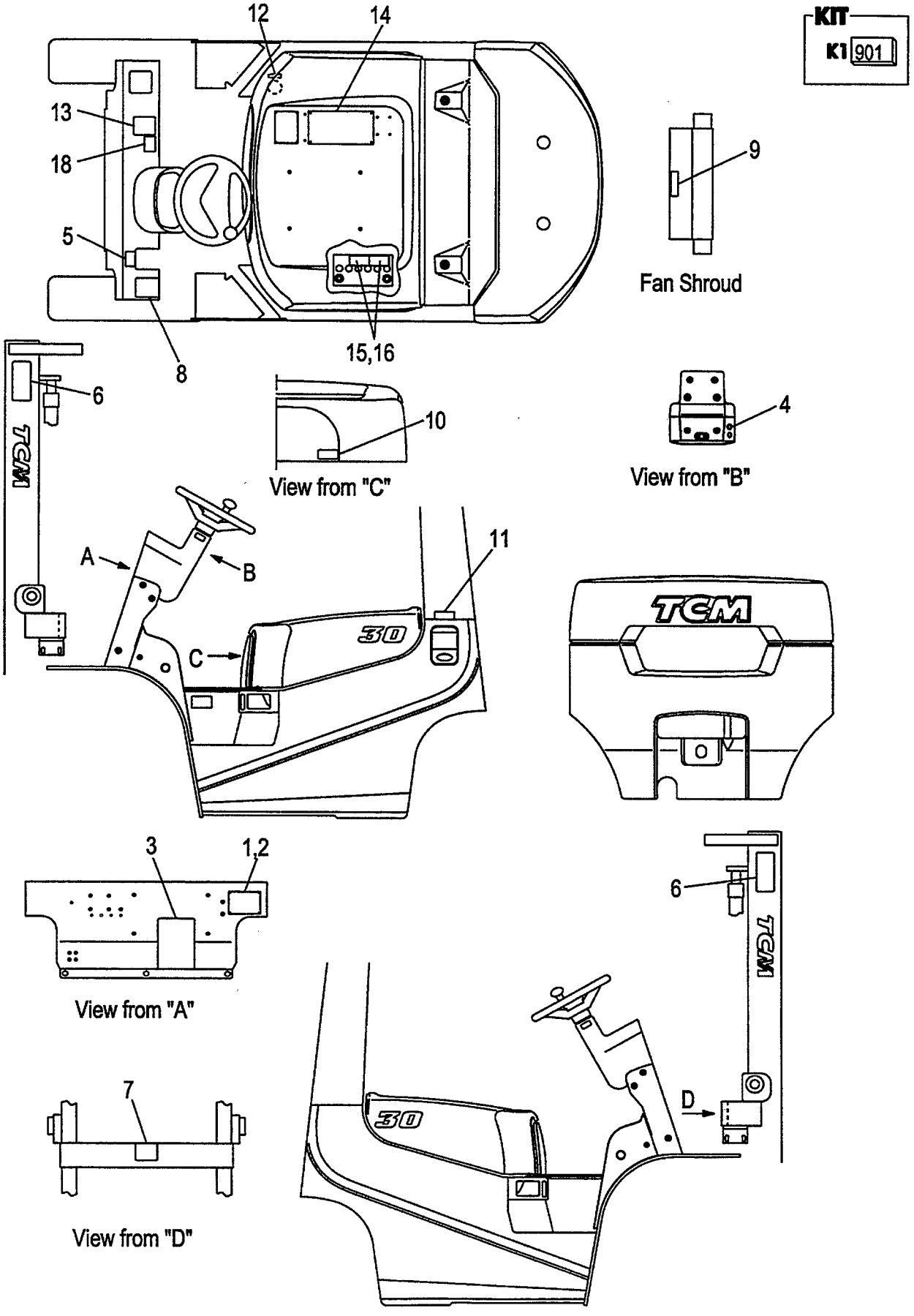

A:FD30C7
B:FD30T7

FIG.178
(F60391E0)

Item No	Part No.	Mark	Description		Req'd	Remarks : Serial No.
901	236A9-19811	K1	KIT,DECAL	ﾃﾞｶﾙｷｯﾄ	1	[EXE/ENGLISH]
						INC.3-9,13,14 & FIG.174:4-6
1	NO PART NO.	#	PLATE,NAME	ﾌﾟﾚｰﾄ	1	[EXE/ENGLISH]
-	NO PART NO.	#	PLATE,NAME	ﾌﾟﾚｰﾄ	1	[EXE/SPANISH]
-	NO PART NO.	#	PLATE,NAME	ﾌﾟﾚｰﾄ	1	[EXE/FRENCH]
-	NO PART NO.	#	PLATE,NAME	ﾌﾟﾚｰﾄ	1	[EXE/GERMAN]
-	NO PART NO.	#	PLATE,NAME	ﾌﾟﾚｰﾄ	1	[EXE/DUTCH]
-	NO PART NO.	#	PLATE,NAME	ﾌﾟﾚｰﾄ	1	[EXE/DANISH]
-	NO PART NO.	#	PLATE,NAME	ﾌﾟﾚｰﾄ	1	[EXE/ITALIAN]
-	NO PART NO.	#	PLATE,NAME	ﾌﾟﾚｰﾄ	1	[EXE/GREEK]
-	NO PART NO.	#	PLATE,NAME	ﾌﾟﾚｰﾄ	1	[EXE/PORTUGUESE]
2	216G9-12131		RIVET	ﾘﾍﾞｯﾄ	4	[EXE]
3	52672-72122	*	CHART,LUBRICATION	ﾁｬｰﾄ	1	[EXE/ENGLISH]
-	53652-82352		CHART,LUBRICATION	ﾁｬｰﾄ	1	[EXE/SPANISH]
-	22959-12052		CHART,LUBRICATION	ﾁｬｰﾄ	1	[EXE/FRENCH]
-	55953-02032		CHART,LUBRICATION	ﾁｬｰﾄ	1	[EXE/GERMAN]
-	522A3-83081		CHART,LUBRICATION	ﾁｬｰﾄ	1	[EXE/DUTCH]
-	522A3-83281		CHART,LUBRICATION	ﾁｬｰﾄ	1	[EXE/DANISH]
-	522A3-83481		CHART,LUBRICATION	ﾁｬｰﾄ	1	[EXE/ITALIAN]
-	522A3-83681		CHART,LUBRICATION	ﾁｬｰﾄ	1	[EXE/GREEK]
-	522A3-83881		CHART,LUBRICATION	ﾁｬｰﾄ	1	[EXE/PORTUGUESE]
4	216G9-12071		DECAL,STARTER-SWITCH	ﾃﾞｶﾙ	1	[EXE]
-	516G3-82011		DECAL,STARTER-SWITCH	ﾃﾞｶﾙ	1	[EXE/SPANISH]
-	516G3-82001		DECAL,STARTER-SWITCH	ﾃﾞｶﾙ	1	[EXE/GERMAN]
-	516G3-82021		DECAL,STARTER-SWITCH	ﾃﾞｶﾙ	1	[EXE/DUTCH]
-	516G3-82031		DECAL,STARTER-SWITCH	ﾃﾞｶﾙ	1	[EXE/DANISH]
-	516G3-82041		DECAL,STARTER-SWITCH	ﾃﾞｶﾙ	1	[EXE/ITALIAN]
-	516G3-82051		DECAL,STARTER-SWITCH	ﾃﾞｶﾙ	1	[EXE/GREEK]
5	514A3-82002	*	DECAL,BRAKE-LEVER	ﾃﾞｶﾙ	1	[EXE/ENGLISH]
-	514A3-82012		DECAL,BRAKE-LEVER	ﾃﾞｶﾙ	1	[EXE/SPANISH]
-	514A3-82022		DECAL,BRAKE-LEVER	ﾃﾞｶﾙ	1	[EXE/FRENCH]
-	514A3-02002		DECAL,BRAKE-LEVER	ﾃﾞｶﾙ	1	[EXE/GERMAN]
-	514A3-82032		DECAL,BRAKE-LEVER	ﾃﾞｶﾙ	1	[EXE/DUTCH]
-	514A3-82042		DECAL,BRAKE-LEVER	ﾃﾞｶﾙ	1	[EXE/DANISH]
-	514A3-82052		DECAL,BRAKE-LEVER	ﾃﾞｶﾙ	1	[EXE/ITALIAN]
-	514A3-82062		DECAL,BRAKE-LEVER	ﾃﾞｶﾙ	1	[EXE/GREEK]
-	514A3-82072		DECAL,BRAKE-LEVER	ﾃﾞｶﾙ	1	[EXE/PORTUGUESE]
6	27419-12061	*	DECAL,MAST-CAUTION	ﾃﾞｶﾙ	2	[EXE]
7	27419-12071	*	DECAL,CROSS-BEAM	ﾃﾞｶﾙ	1	[EXE]
8	516G2-72711	*	DECAL,TIRE-CAUTION	ﾃﾞｶﾙ	1	[EXE/ENGLISH]
-	516G3-82211		DECAL,TIRE-CAUTION	ﾃﾞｶﾙ	1	[EXE/SPANISH]
-	516G3-82221		DECAL,TIRE-CAUTION	ﾃﾞｶﾙ	1	[EXE/FRENCH]
-	516G3-82201		DECAL,TIRE-CAUTION	ﾃﾞｶﾙ	1	[EXE/GERMAN]
-	516G3-82232		DECAL,TIRE-CAUTION	ﾃﾞｶﾙ	1	[EXE/DUTCH]
-	516G3-82241		DECAL,TIRE-CAUTION	ﾃﾞｶﾙ	1	[EXE/DANISH]
-	516G3-82251		DECAL,TIRE-CAUTION	ﾃﾞｶﾙ	1	[EXE/ITALIAN]
-	516G3-82261		DECAL,TIRE-CAUTION	ﾃﾞｶﾙ	1	[EXE/GREEK]
-	516G3-82271		DECAL,TIRE-CAUTION	ﾃﾞｶﾙ	1	[EXE/PORTUGUESE]
9	516G2-72701	*	DECAL,FAN-CAUTION	ﾃﾞｶﾙ	1	[EXE/ENGLISH]
-	516G3-82111		DECAL,FAN-CAUTION	ﾃﾞｶﾙ	1	[EXE/SPANISH]

FIG.178 DECAL (2/2)[EXE]

(F60391E0) ﾃﾞｶﾙ(2/2)

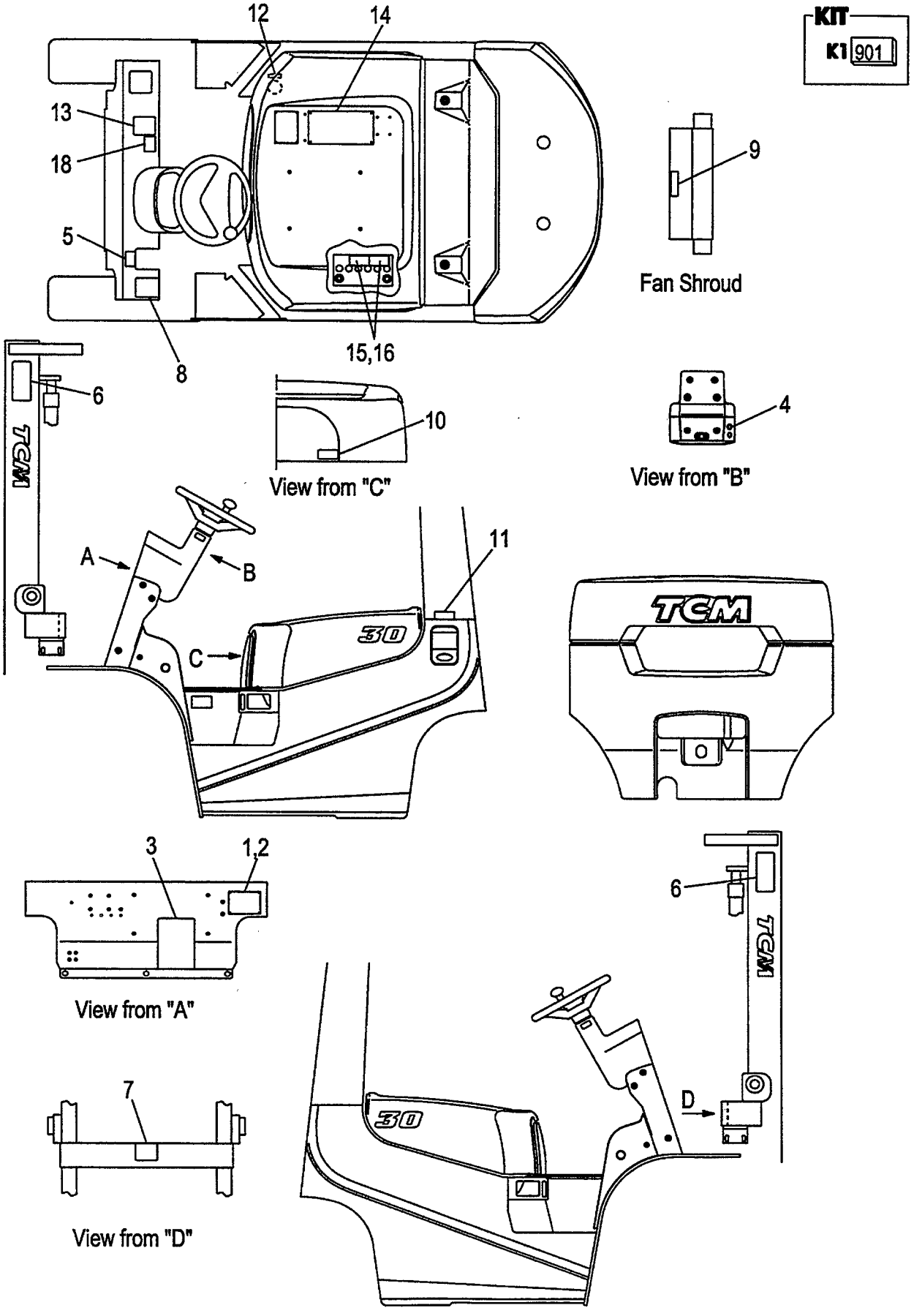

A:FD30C7
B:FD30T7

FIG.178
(F60391E0)

Item No	Part No.	Mark	Description	Req'd	Remarks : Serial No.
-	516G3-82121		DECAL,FAN-CAUTION デカル	1	[EXE/FRENCH]
-	516G3-82101		DECAL,FAN-CAUTION デカル	1	[EXE/GERMAN]
-	516G3-82131		DECAL,FAN-CAUTION デカル	1	[EXE/DUTCH]
-	516G3-82141		DECAL,FAN-CAUTION デカル	1	[EXE/DANISH]
-	516G3-82151		DECAL,FAN-CAUTION デカル	1	[EXE/ITALIAN]
-	516G3-82161		DECAL,FAN-CAUTION デカル	1	[EXE/GREEK]
-	516G3-82171		DECAL,FAN-CAUTION デカル	1	[EXE/PORTUGUESE]
10	536G2-82181		DECAL,FUEL-CAPACITY デカル	1	[EXE/ENGLISH]
-	536G3-82001		DECAL,FUEL-CAPACITY デカル	1	[EXE/SPANISH]
-	536G3-82011		DECAL,FUEL-CAPACITY デカル	1	[EXE/FRENCH]
-	536G3-82021		DECAL,FUEL-CAPACITY デカル	1	[EXE/GERMAN]
-	536G3-82031		DECAL,FUEL-CAPACITY デカル	1	[EXE/DUTCH]
-	536G3-82041		DECAL,FUEL-CAPACITY デカル	1	[EXE/DANISH]
-	536G3-82051		DECAL,FUEL-CAPACITY デカル	1	[EXE/ITALIAN]
-	536G3-82061		DECAL,FUEL-CAPACITY デカル	1	[EXE/GREEK]
-	536G3-82071		DECAL,FUEL-CAPACITY デカル	1	[EXE/PORTUGUESE]
11	522A2-72111		DECAL,LIGHT-OIL デカル	1	[EXE/ENGLISH]
-	51152-82022		DECAL,LIGHT-OIL デカル	1	[EXE/SPANISH]
-	51152-82012		DECAL,LIGHT-OIL デカル	1	[EXE/FRENCH]
-	51153-02001		DECAL,LIGHT-OIL デカル	1	[EXE/GERMAN]
-	522A3-83021		DECAL,LIGHT-OIL デカル	1	[EXE/DUTCH]
-	522A3-83221		DECAL,LIGHT-OIL デカル	1	[EXE/DANISH]
-	522A3-83421		DECAL,LIGHT-OIL デカル	1	[EXE/ITALIAN]
-	522A3-83621		DECAL,LIGHT-OIL デカル	1	[EXE/GREEK]
-	522A3-83821		DECAL,LIGHT-OIL デカル	1	[EXE/PORTUGUESE]
12	53652-82401		DECAL,OIL デカル	1	[EXE/SPANISH]
-	53652-82011		DECAL,OIL デカル	1	[EXE/FRENCH]
-	51233-02021		DECAL,OIL デカル	1	[EXE/GERMAN]
-	522A3-83061		DECAL,OIL デカル	1	[EXE/DUTCH][EXE/DANISH]
-	522A3-83461		DECAL,OIL デカル	1	[EXE/ITALIAN]
-	522A3-83661		DECAL,OIL デカル	1	[EXE/GREEK]
-	522A3-83861		DECAL,OIL デカル	1	[EXE/PORTUGUESE]
13	571A3-82361	*	DECAL,CAUTION デカル	1	[EXE]
14	516G3-82801	*	DECAL,CAUTION デカル	1	[EXE/ENGLISH]
-	516G3-82821		DECAL,CAUTION デカル	1	[EXE/SPANISH]
-	516G3-82831		DECAL,CAUTION デカル	1	[EXE/FRENCH]
-	516G3-82811		DECAL,CAUTION デカル	1	[EXE/GERMAN]
-	516G3-82841		DECAL,CAUTION デカル	1	[EXE/DUTCH]
-	516G3-82851		DECAL,CAUTION デカル	1	[EXE/DANISH]
-	516G3-82861		DECAL,CAUTION デカル	1	[EXE/ITALIAN]
-	516G3-82871		DECAL,CAUTION デカル	1	[EXE/GREEK]
-	516G3-82881		DECAL,CAUTION デカル	1	[EXE/PORTUGUESE]
15	534A3-82311		DECAL,BATTERY,A デカル	1	[EXE/ENGLISH]
-	534A3-82331		DECAL,BATTERY,A デカル	1	[EXE/SPANISH]
-	534A3-82341		DECAL,BATTERY,A デカル	1	[EXE/FRENCH]
-	534A3-82321		DECAL,BATTERY,A デカル	1	[EXE/GERMAN]
-	534A3-82351		DECAL,BATTERY,A デカル	1	[EXE/DUTCH]
-	534A3-82361		DECAL,BATTERY,A デカル	1	[EXE/DANISH]
-	534A3-82371		DECAL,BATTERY,A デカル	1	[EXE/ITALIAN]
-	534A3-82381		DECAL,BATTERY,A デカル	1	[EXE/GREEK]

FIG.178 DECAL (2/2)[EXE]

(F60391E0) ﾃﾞｶﾙ(2/2)

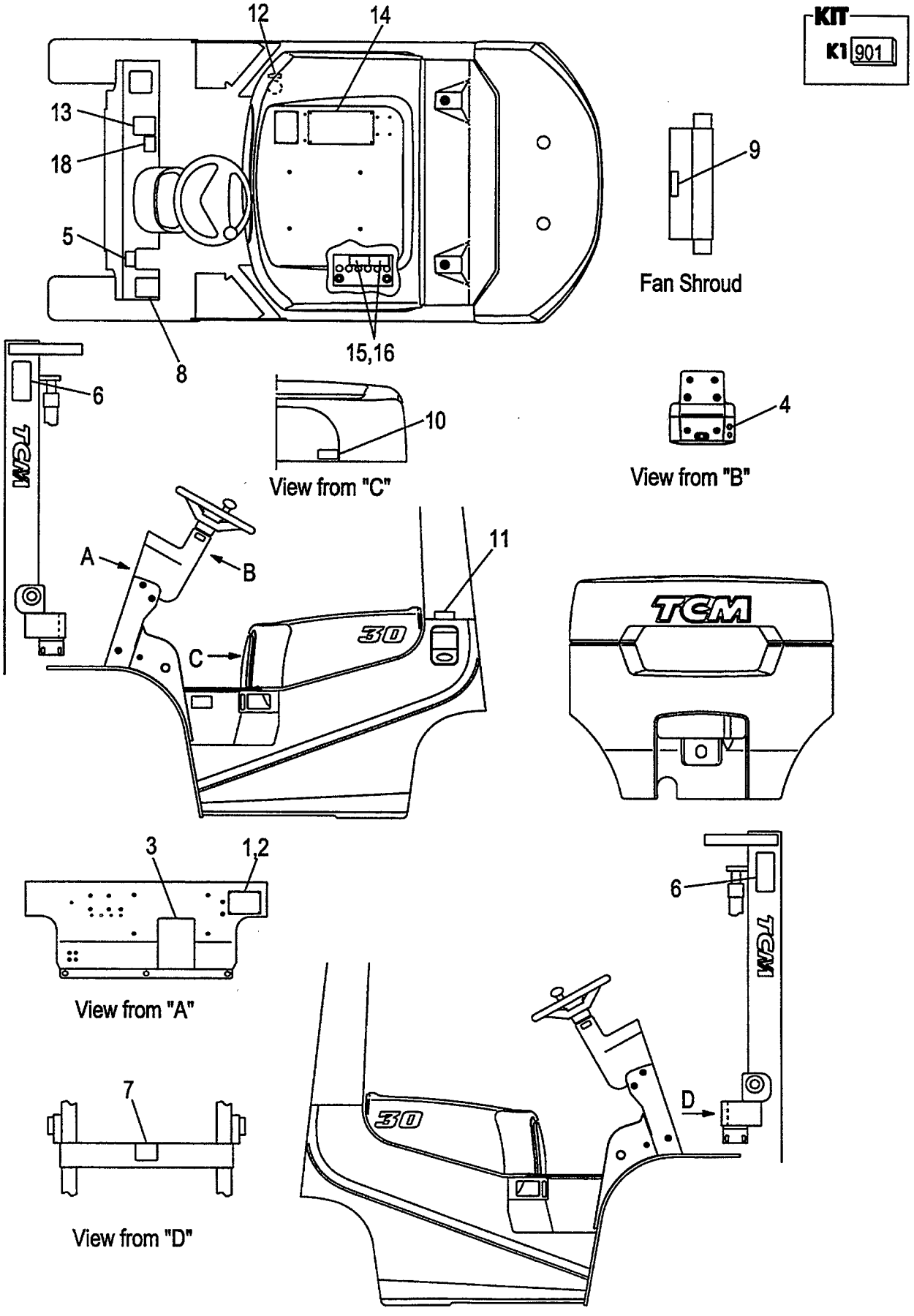

A:FD30C7
B:FD30T7

FIG.178
(F60391E0)

Item No	Part No.	Mark	Description	Req'd	Remarks : Serial No.
-	534A3-82391		DECAL,BATTERY,A デカル	1	[EXE/PORTUGUESE]
16	534A3-82421		DECAL,BATTERY,B デカル	1	[EXE/ENGLISH]
-	534A3-82441		DECAL,BATTERY,B デカル	1	[EXE/SPANISH]
-	534A3-82451		DECAL,BATTERY,B デカル	1	[EXE/FRENCH]
-	534A3-82431		DECAL,BATTERY,B デカル	1	[EXE/GERMAN]
-	534A3-82461		DECAL,BATTERY,B デカル	1	[EXE/DUTCH]
-	534A3-82471		DECAL,BATTERY,B デカル	1	[EXE/DANISH]
-	534A3-82481		DECAL,BATTERY,B デカル	1	[EXE/ITALIAN]
-	534A3-82491		DECAL,BATTERY,B デカル	1	[EXE/GREEK]
-	534A3-82501		DECAL,BATTERY,B デカル	1	[EXE/PORTUGUESE]
17	55592-82001	+	DECAL,CERTIFICATE デカル	1	[EXE]
18	535H3-82411		DECAL,CREEP-CAUTION デカル	1	B [EXE/ENGLISH]
-	535H3-82421		DECAL,CREEP-CAUTION デカル	1	B [EXE/SPANISH]
-	535H3-82431		DECAL,CREEP-CAUTION デカル	1	B [EXE/FRENCH]
-	535H3-82441		DECAL,CREEP-CAUTION デカル	1	B [EXE/GERMAN]
-	535H3-82451		DECAL,CREEP-CAUTION デカル	1	B [EXE/DUTCH]
-	535H3-82461		DECAL,CREEP-CAUTION デカル	1	B [EXE/DANISH]
-	535H3-82471		DECAL,CREEP-CAUTION デカル	1	B [EXE/ITALIAN]
-	535H3-82481		DECAL,CREEP-CAUTION デカル	1	B [EXE/GREEK]
-	535H3-82491		DECAL,CREEP-CAUTION デカル	1	B [EXE/PORTUGUESE]

FIG.179 DECAL (2/2)[EXK]

(F60391K0) ﾃﾞｶﾙ(2/2)

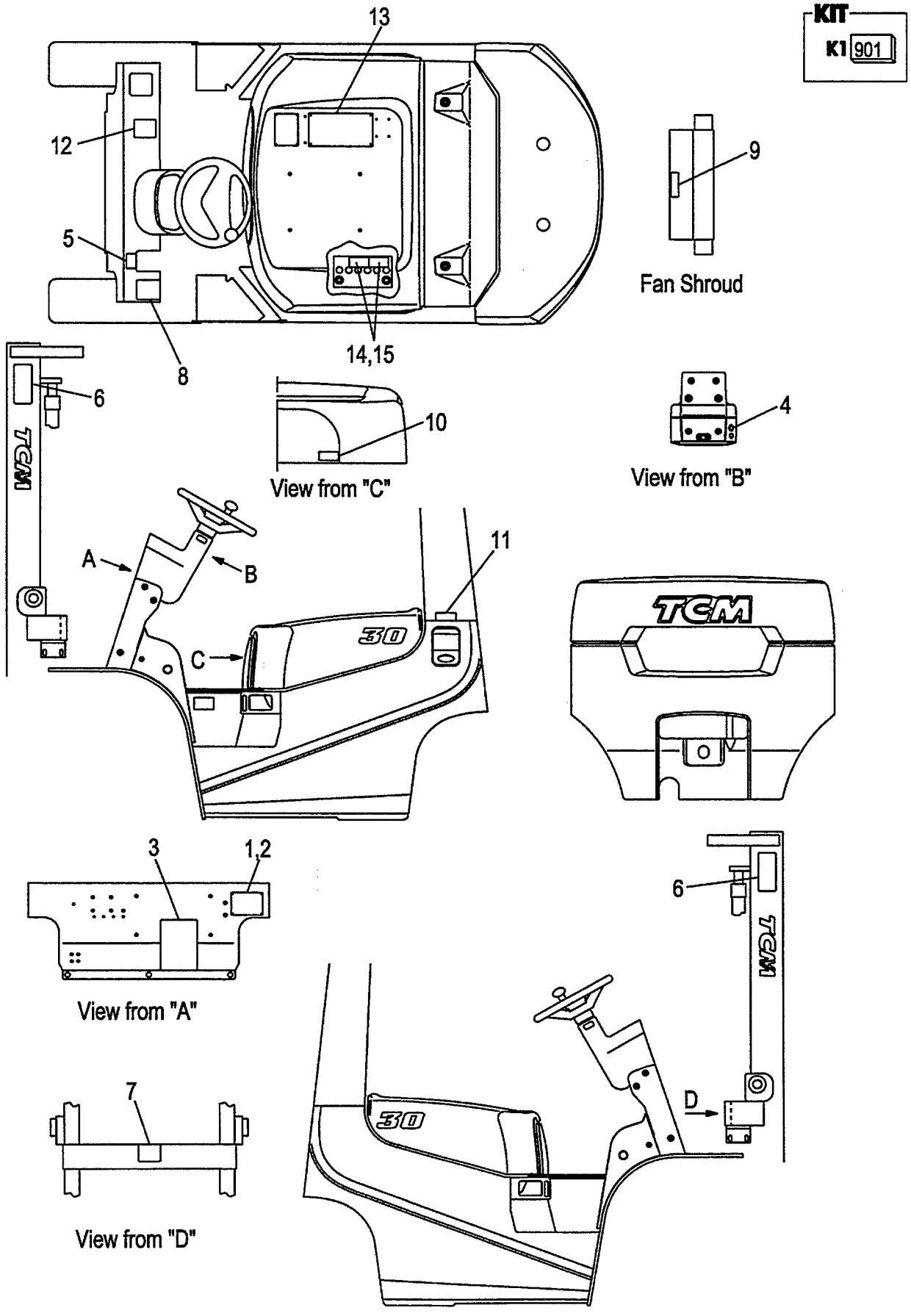

A:FD30C7
B:FD30T7

FIG.179
(F60391K0)

Item No	Part No.	Mark	Description		Req'd	Remarks : Serial No.
901	236A9-19811	K1	KIT,DECAL	ﾃﾞｶﾙｷｯﾄ	1	[EXK]
						INC.3-9,12,13 & FIG.174:4-6
1	NO PART NO.	#	PLATE,NAME	ﾌﾟﾚｰﾄ	1	[EXK]
2	216G9-12131		RIVET	ﾘﾍﾞｯﾄ	4	[EXK]
3	52672-72122	*	CHART,LUBRICATION	ﾁｬｰﾄ	1	[EXK]
4	216G9-12071		DECAL,STARTER-SWITCH	ﾃﾞｶﾙ	1	[EXK]
5	514A3-82002	*	DECAL,BRAKE-LEVER	ﾃﾞｶﾙ	1	[EXK]
6	27419-12061	*	DECAL,MAST-CAUTION	ﾃﾞｶﾙ	2	[EXK]
7	27419-12071	*	DECAL,CROSS-BEAM	ﾃﾞｶﾙ	1	[EXK]
8	516G2-72711	*	DECAL,TIRE-CAUTION	ﾃﾞｶﾙ	1	[EXK]
9	516G2-72701	*	DECAL,FAN-CAUTION	ﾃﾞｶﾙ	1	[EXK]
10	536G2-82181		DECAL,FUEL-CAPACITY	ﾃﾞｶﾙ	1	[EXK]
11	522A2-72111		DECAL,LIGHT-OIL	ﾃﾞｶﾙ	1	[EXK]
12	571A3-82361	*	DECAL,CAUTION	ﾃﾞｶﾙ	1	[EXK]
13	516G3-82801	*	DECAL,CAUTION	ﾃﾞｶﾙ	1	[EXK]
14	534A3-82311		DECAL,BATTERY,A	ﾃﾞｶﾙ	1	[EXK]
15	534A3-82421		DECAL,BATTERY,B	ﾃﾞｶﾙ	1	[EXK]
16	55592-82001	+	DECAL,CERTIFICATE	ﾃﾞｶﾙ	1	[EXK]

FIG.180 DECAL (2/2)[EXN]

(F60391N0) デカル(2/2)

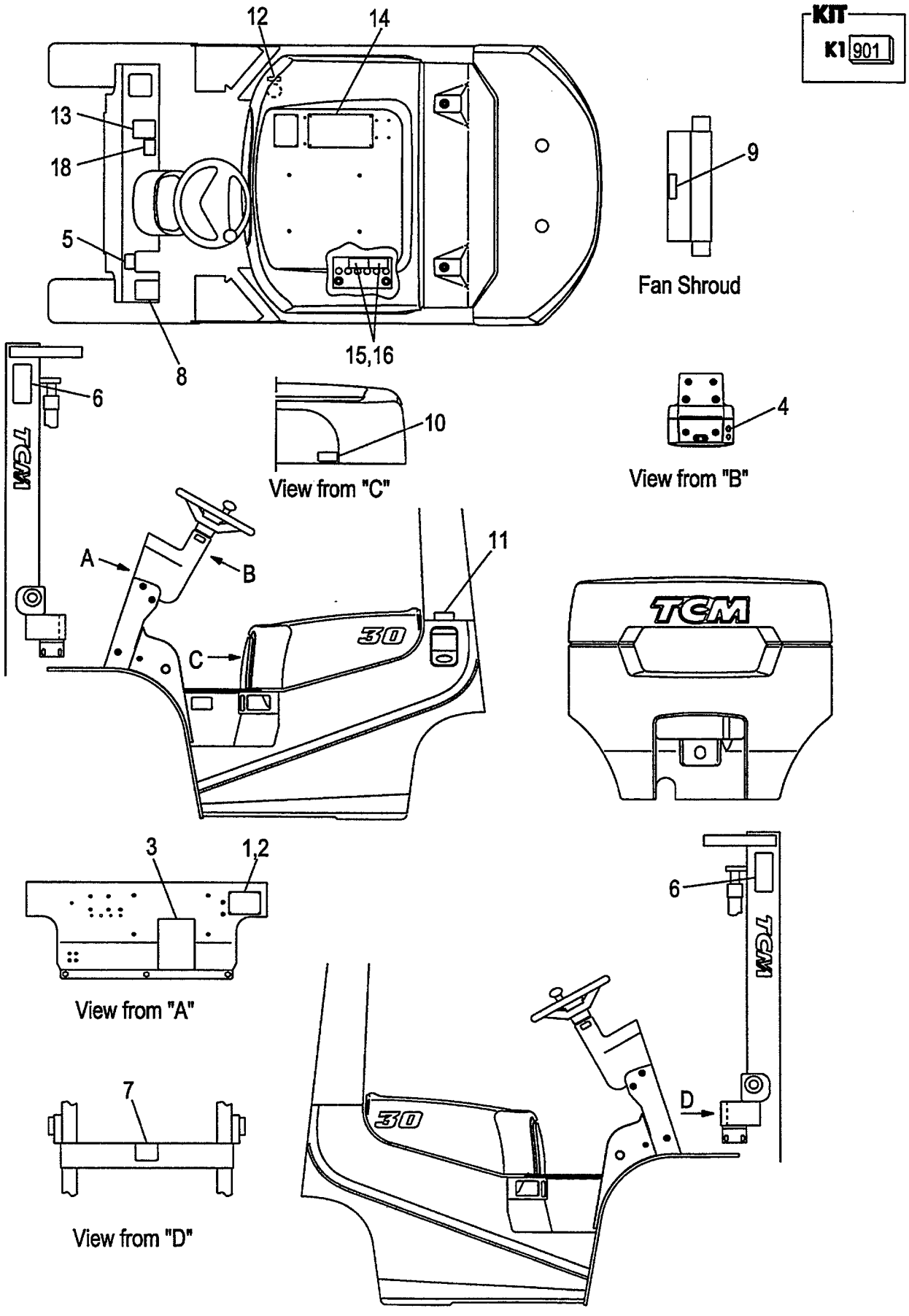

A:FD30C7
B:FD30T7

FIG.180
(F60391N0)

Item No	Part No.	Mark	Description		Req'd	Remarks : Serial No.
901	236A9-19811	K1	KIT,DECAL	ﾃﾞｶﾙｷｯﾄ	1	[EXN/ENGLISH]
						INC.3-9,13,14 & FIG.174:4-6
1	NO PART NO.	#	PLATE,NAME	ﾌﾟﾚｰﾄ	1	[EXN/ENGLISH]
-	NO PART NO.	#	PLATE,NAME	ﾌﾟﾚｰﾄ	1	[EXN/DANISH]
-	NO PART NO.	#	PLATE,NAME	ﾌﾟﾚｰﾄ	1	[EXN/SWEDISH]
-	NO PART NO.	#	PLATE,NAME	ﾌﾟﾚｰﾄ	1	[EXN/FINNISH]
2	216G9-12131		RIVET	ﾘﾍﾞｯﾄ	4	[EXN]
3	52672-72122	*	CHART,LUBRICATION	ﾁｬｰﾄ	1	[EXN/ENGLISH]
-	522A3-83281		CHART,LUBRICATION	ﾁｬｰﾄ	1	[EXN/DANISH]
-	529F3-82171		CHART,LUBRICATION	ﾁｬｰﾄ	1	[EXN/SWEDISH]
-	529F3-82161		CHART,LUBRICATION	ﾁｬｰﾄ	1	[EXN/FINNISH]
4	216G9-12071		DECAL,STARTER-SWITCH	ﾃﾞｶﾙ	1	[EXN/ENGLISH]
-	516G3-82031		DECAL,STARTER-SWITCH	ﾃﾞｶﾙ	1	[EXN/DANISH]
-	516G3-82071		DECAL,STARTER-SWITCH	ﾃﾞｶﾙ	1	[EXN/SWEDISH]
-	516G3-82061		DECAL,STARTER-SWITCH	ﾃﾞｶﾙ	1	[EXN/FINNISH]
5	514A3-82002	*	DECAL,BRAKE-LEVER	ﾃﾞｶﾙ	1	[EXN/ENGLISH]
-	514A3-82042		DECAL,BRAKE-LEVER	ﾃﾞｶﾙ	1	[EXN/DANISH]
-	529F3-82252		DECAL,BRAKE-LEVER	ﾃﾞｶﾙ	1	[EXN/SWEDISH]
-	529F3-82242		DECAL,BRAKE-LEVER	ﾃﾞｶﾙ	1	[EXN/FINNISH]
6	27419-12061	*	DECAL,MAST-CAUTION	ﾃﾞｶﾙ	2	[EXN]
7	27419-12071	*	DECAL,CROSS-BEAM	ﾃﾞｶﾙ	1	[EXN]
8	516G2-72711	*	DECAL,TIRE-CAUTION	ﾃﾞｶﾙ	1	[EXN/ENGLISH]
-	516G3-82241		DECAL,TIRE-CAUTION	ﾃﾞｶﾙ	1	[EXN/DANISH]
-	516G3-82291		DECAL,TIRE-CAUTION	ﾃﾞｶﾙ	1	[EXN/SWEDISH]
-	516G3-82281		DECAL,TIRE-CAUTION	ﾃﾞｶﾙ	1	[EXN/FINNISH]
9	516G2-72701	*	DECAL,FAN-CAUTION	ﾃﾞｶﾙ	1	[EXN/ENGLISH]
-	516G3-82141		DECAL,FAN-CAUTION	ﾃﾞｶﾙ	1	[EXN/DANISH]
-	516G3-82191		DECAL,FAN-CAUTION	ﾃﾞｶﾙ	1	[EXN/SWEDISH]
-	516G3-82181		DECAL,FAN-CAUTION	ﾃﾞｶﾙ	1	[EXN/FINNISH]
10	536G2-82181		DECAL,FUEL-CAPACITY	ﾃﾞｶﾙ	1	[EXN/ENGLISH]
-	536G3-82041		DECAL,FUEL-CAPACITY	ﾃﾞｶﾙ	1	[EXN/DANISH]
-	536G3-82091		DECAL,FUEL-CAPACITY	ﾃﾞｶﾙ	1	[EXN/SWEDISH]
-	536G3-82081		DECAL,FUEL-CAPACITY	ﾃﾞｶﾙ	1	[EXN/FINNISH]
11	522A2-72111		DECAL,LIGHT-OIL	ﾃﾞｶﾙ	1	[EXN/ENGLISH]
-	522A3-83221		DECAL,LIGHT-OIL	ﾃﾞｶﾙ	1	[EXN/DANISH]
-	529F3-82051		DECAL,LIGHT-OIL	ﾃﾞｶﾙ	1	[EXN/SWEDISH]
-	529F3-82041		DECAL,LIGHT-OIL	ﾃﾞｶﾙ	1	[EXN/FINNISH]
12	522A3-83061		DECAL,OIL	ﾃﾞｶﾙ	1	[EXN/DANISH]
-	529F3-82071		DECAL,OIL	ﾃﾞｶﾙ	1	[EXN/SWEDISH]
-	529F3-82061		DECAL,OIL	ﾃﾞｶﾙ	1	[EXN/FINNISH]
13	571A3-82361	*	DECAL,CAUTION	ﾃﾞｶﾙ	1	[EXN]
14	516G3-82801	*	DECAL,CAUTION	ﾃﾞｶﾙ	1	[EXN/ENGLISH]
-	516G3-82851		DECAL,CAUTION	ﾃﾞｶﾙ	1	[EXN/DANISH]
-	516G3-82891		DECAL,CAUTION	ﾃﾞｶﾙ	1	[EXN/SWEDISH]
-	516G3-82901		DECAL,CAUTION	ﾃﾞｶﾙ	1	[EXN/FINNISH]
15	534A3-82311		DECAL,BATTERY,A	ﾃﾞｶﾙ	1	[EXN/ENGLISH]
-	534A3-82361		DECAL,BATTERY,A	ﾃﾞｶﾙ	1	[EXN/DANISH]
-	534A3-82411		DECAL,BATTERY,A	ﾃﾞｶﾙ	1	[EXN/SWEDISH]
-	534A3-82401		DECAL,BATTERY,A	ﾃﾞｶﾙ	1	[EXN/FINNISH]
16	534A3-82421		DECAL,BATTERY,B	ﾃﾞｶﾙ	1	[EXN/ENGLISH]

FIG.180 DECAL (2/2)[EXN]

(F60391N0) デカル(2/2)

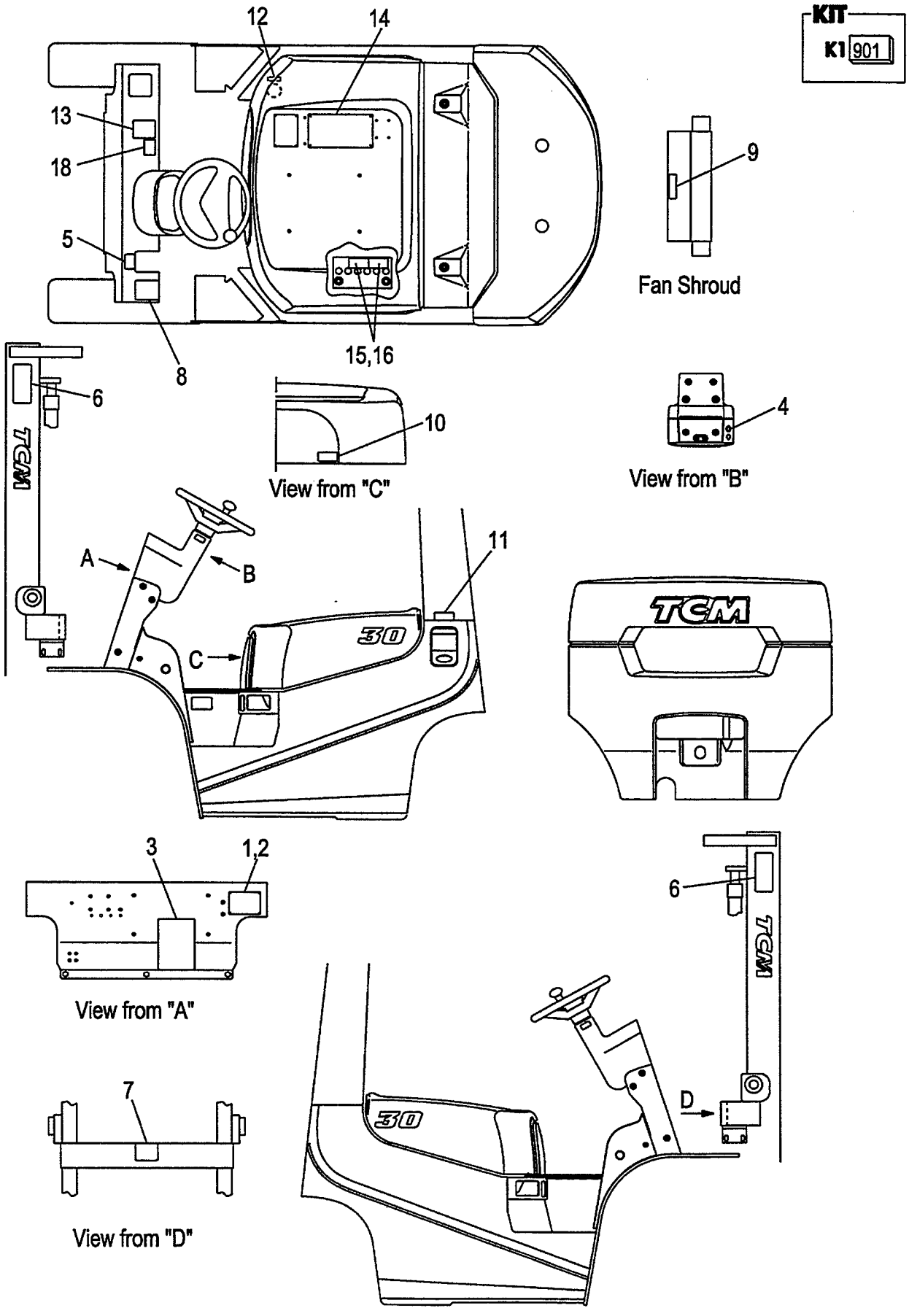

A:FD30C7
B:FD30T7

FIG.180
(F60391N0)

Item No	Part No.	Mark	Description	Req'd	Remarks : Serial No.
-	534A3-82471		DECAL,BATTERY,B デカル	1	[EXN/DANISH]
-	534A3-82521		DECAL,BATTERY,B デカル	1	[EXN/SWEDISH]
-	534A3-82511		DECAL,BATTERY,B デカル	1	[EXN/FINNISH]
17	55592-82001	+	DECAL,CERTIFICATE デカル	1	[EXN]
18	535H3-82411		DECAL,CREEP-CAUTION デカル	1	B [EXN/ENGLISH]
-	535H3-82461		DECAL,CREEP-CAUTION デカル	1	B [EXN/DANISH]
-	535H3-82511		DECAL,CREEP-CAUTION デカル	1	B [EXN/SWEDISH]
-	535H3-82501		DECAL,CREEP-CAUTION デカル	1	B [EXN/FINNISH]

FIG.181 SERVICE TOOL [TO][EX]

(F6039210) サービスツール

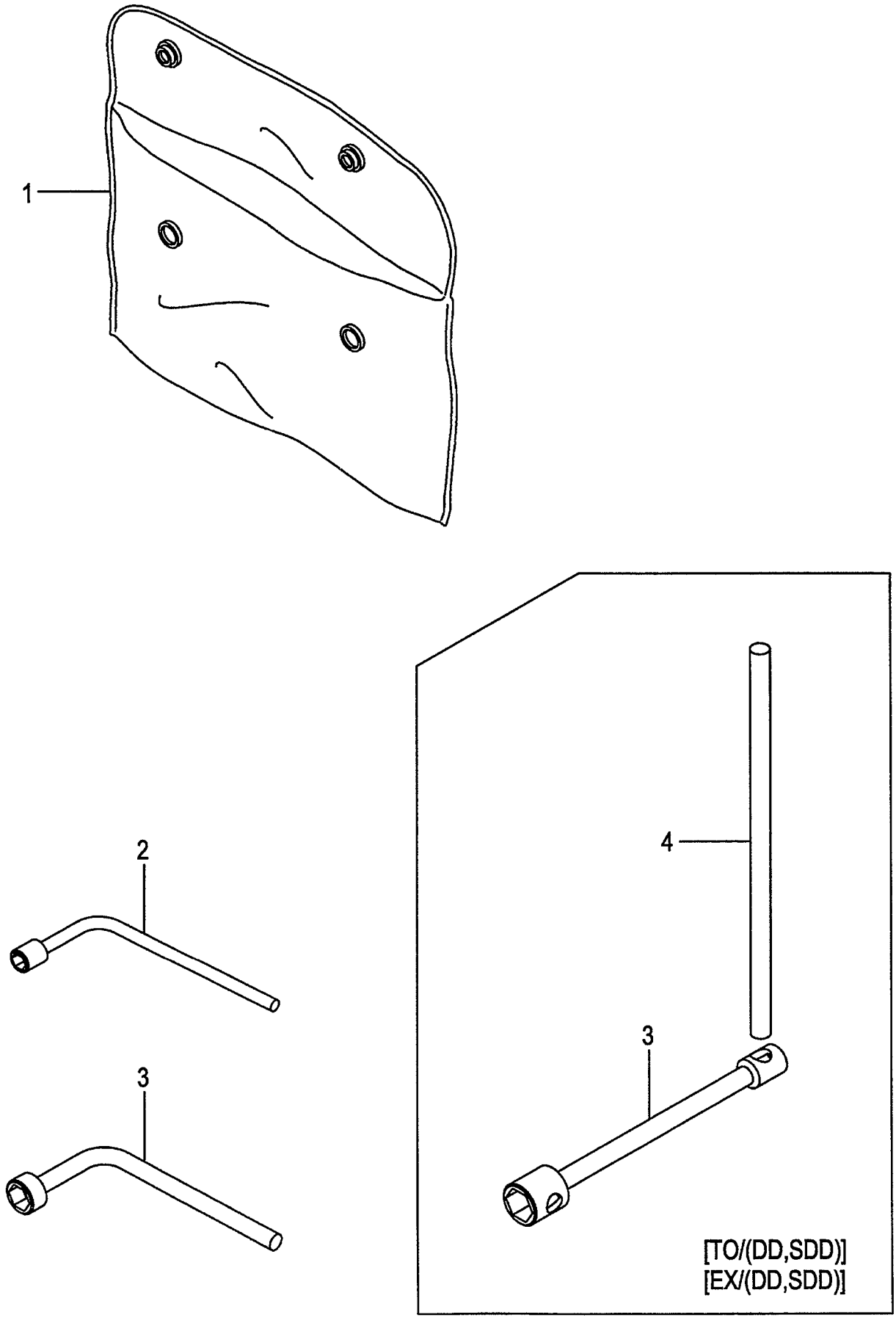

A:FD30C7 FD30T7
B:FD30W7

FIG.181
(F6039210)

Item No	Part No.	Mark	Description	Req'd	Remarks : Serial No.
1	214A9-20101		SACK,SERVICE-TOOLS サック	1	[TO]
-	214A9-20101		SACK,SERVICE-TOOLS サック	1	A
					[EX]
2	22199-22251		WRENCH,HUB-NUT,21MM レンチ	1	[TO](REAR)
-	22199-22251		WRENCH,HUB-NUT,21MM レンチ	1	A
					[EX](REAR)
3	24459-22011		WRENCH,HUB-NUT,41MM レンチ	1	[TO](FRONT)
-	24459-22011		WRENCH,HUB-NUT,41MM レンチ	1	A
					[EX](FRONT)
-	23819-20011		WRENCH,HUB-NUT,41MM レンチ	1	[TO/DD][TO/SDD](FRONT)
-	23819-20011		WRENCH,HUB-NUT,41MM レンチ	1	A
					[EX/DD][EX/SDD](FRONT)
4	23819-20021		LEVER,WRENCH,HUB-NUT レバー	1	[TO/DD][TO/SDD]
-	23819-20021		LEVER,WRENCH,HUB-NUT レバー	1	A
					[EX/DD][EX/SDD]

FIG.182 FIRE EXTINGUISHER [FE][FE M]

(F60393E0) ﾌｧｲﾔｲｸｽﾃｨﾝｸﾞｲｯｼｬ

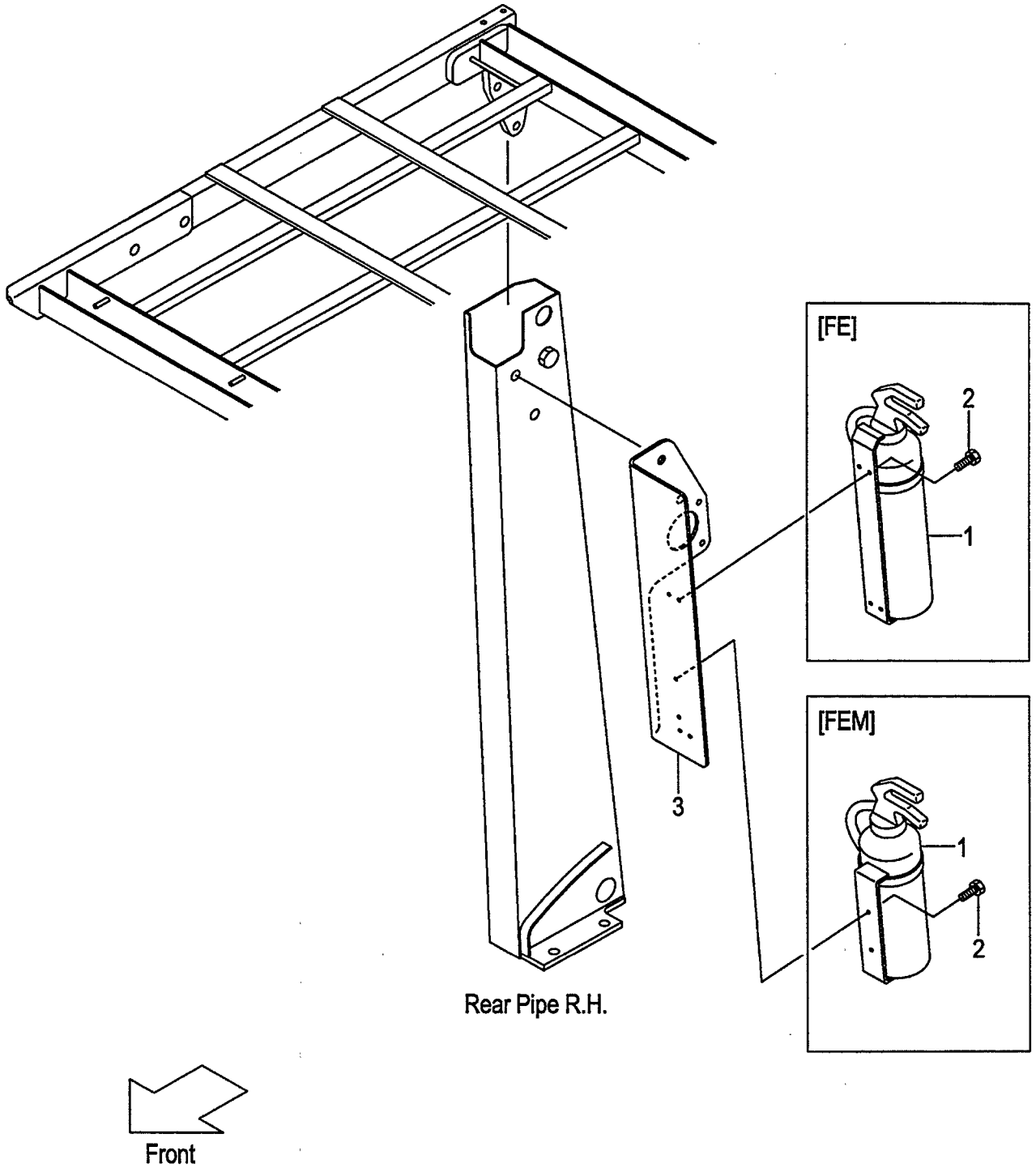

FIG.182
(F60393E0)

A:FD30C7 FD30T7 FD30W7

Item No	Part No.	Mark	Description		Req'd	Remarks : Serial No.
1	22679-12102		EXTINGUISHER,FIRE	ｲｸｽﾃｨﾝｸﾞｲｯｼｬ	1	[FE]
-	271A9-12191		EXTINGUISHER,FIRE	ｲｸｽﾃｨﾝｸﾞｲｯｼｬ	1	[FE M]
2	01183-05012		BOLT	ﾎﾞﾙﾄ	4	[FE]
-	01183-05012		BOLT	ﾎﾞﾙﾄ	2	[FE M]
3	539A9-62001		BRACKET,EXTINGUISHER	ﾌﾞﾗｹｯﾄ	1	[FE][FE M]

FIG.183 FORK [VM39F]

(M5028120) フォーク

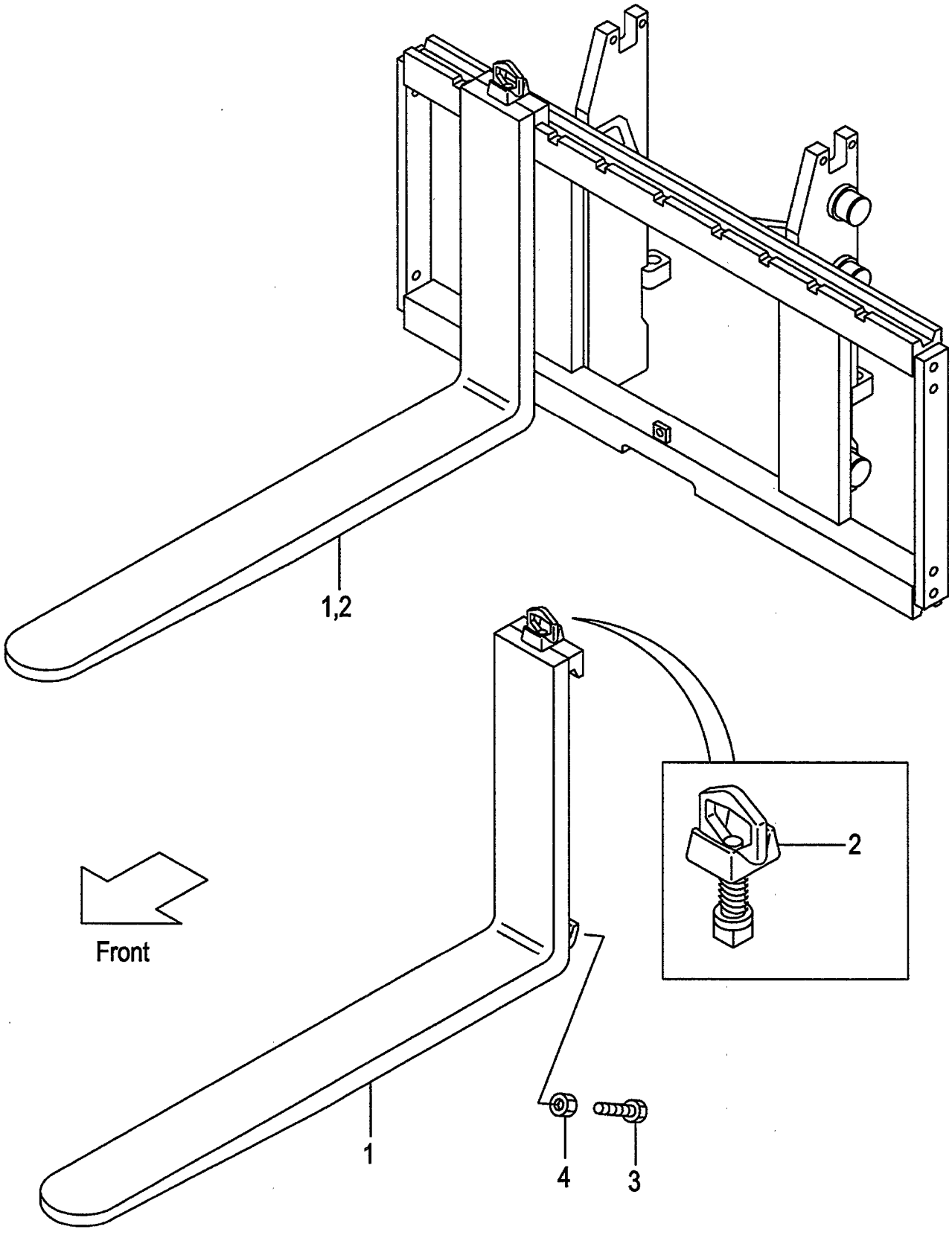

A:VM39F

Item No	Part No.	Mark	Description		Req'd	Remarks : Serial No.
1	214J8-10581		FORK	ﾌｫｰｸ	2	[LF100] INC.2
-	214J8-10501		FORK	ﾌｫｰｸ	2	[LF107] INC.2
-	214J8-10501		FORK	ﾌｫｰｸ	2	(L=1070) INC.2
-	214J8-10591		FORK	ﾌｫｰｸ	2	[LF110] INC.2
-	214J8-10601		FORK	ﾌｫｰｸ	2	[LF120] INC.2
-	214J8-10511		FORK	ﾌｫｰｸ	2	[LF122] INC.2
-	214J8-10611		FORK	ﾌｫｰｸ	2	[LF130] INC.2
-	214J8-10521		FORK	ﾌｫｰｸ	2	[LF137] INC.2
-	214J8-10621		FORK	ﾌｫｰｸ	2	[LF140] INC.2
-	214J8-10631		FORK	ﾌｫｰｸ	2	[LF150] INC.2
-	214J8-10531		FORK	ﾌｫｰｸ	2	[LF152] INC.2
-	214J8-10641		FORK	ﾌｫｰｸ	2	[LF160] INC.2
-	214J8-10541		FORK	ﾌｫｰｸ	2	[LF167] INC.2
-	214J8-10651		FORK	ﾌｫｰｸ	2	[LF170] INC.2
-	214J8-10661		FORK	ﾌｫｰｸ	2	[LF180] INC.2
-	214J8-10551		FORK	ﾌｫｰｸ	2	[LF182] INC.2
-	214J8-10671		FORK	ﾌｫｰｸ	2	[LF190] INC.2
-	214J8-10561		FORK	ﾌｫｰｸ	2	[LF197] INC.2
-	214J8-10681		FORK	ﾌｫｰｸ	2	[LF200] INC.2
-	214J8-10571		FORK	ﾌｫｰｸ	2	[LF212] INC.2
-	234F8-10581		FORK	ﾌｫｰｸ	2	[LFD100] INC.2
-	234F8-10501		FORK	ﾌｫｰｸ	2	[LFD107] INC.2
-	234F8-10591		FORK	ﾌｫｰｸ	2	[LFD110] INC.2
-	234F8-10601		FORK	ﾌｫｰｸ	2	[LFD120] INC.2
-	234F8-10511		FORK	ﾌｫｰｸ	2	[LFD122] INC.2
-	234F8-10611		FORK	ﾌｫｰｸ	2	[LFD130] INC.2
-	234F8-10521		FORK	ﾌｫｰｸ	2	[LFD137] INC.2
-	234F8-10621		FORK	ﾌｫｰｸ	2	[LFD140] INC.2
-	234F8-10631		FORK	ﾌｫｰｸ	2	[LFD150] INC.2
-	234F8-10531		FORK	ﾌｫｰｸ	2	[LFD152] INC.2
-	234F8-10641		FORK	ﾌｫｰｸ	2	[LFD160] INC.2
-	234F8-10541		FORK	ﾌｫｰｸ	2	[LFD167] INC.2
-	234F8-10651		FORK	ﾌｫｰｸ	2	[LFD170] INC.2
-	234F8-10661		FORK	ﾌｫｰｸ	2	[LFD180] INC.2
-	234F8-10551		FORK	ﾌｫｰｸ	2	[LFD182] INC.2
-	234F8-10671		FORK	ﾌｫｰｸ	2	[LFD190] INC.2
-	234F8-10561		FORK	ﾌｫｰｸ	2	[LFD197] INC.2
-	234F8-10681		FORK	ﾌｫｰｸ	2	[LFD200] INC.2
-	234F8-10571		FORK	ﾌｫｰｸ	2	[LFD212] INC.2
2	214J8-11002		STOPPER	ｽﾄｯﾊﾟ	2	
3	234F8-12101		BOLT	ﾎﾞﾙﾄ	4	[LFD]
4	01402-00010		NUT	ﾅｯﾄ	4	[LFD]

FIG.184 LIFT BRACKET [VM39F]

(M5028230) リフトブラケット

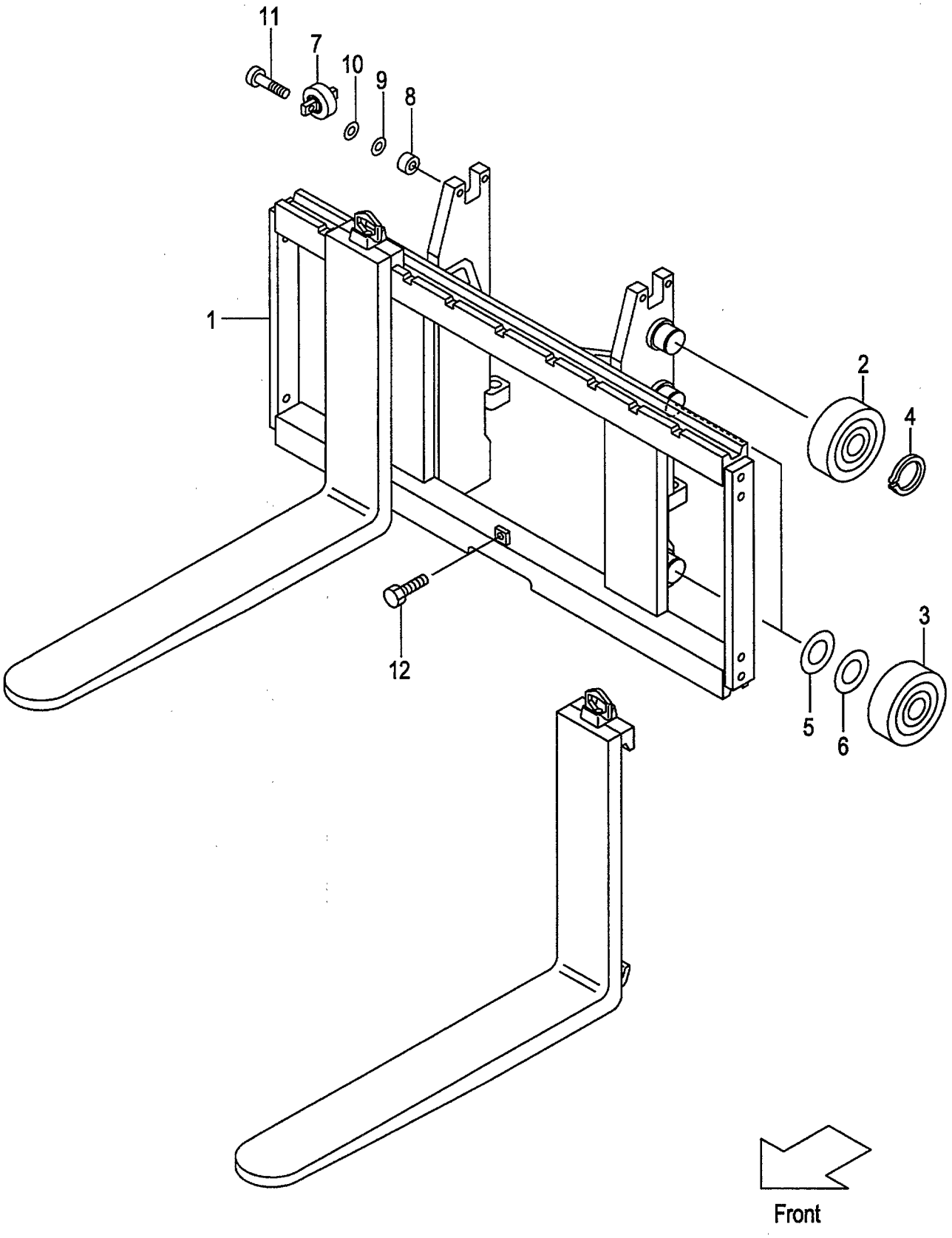

A:VM39F

Item No	Part No.	Mark	Description		Req'd	Remarks : Serial No.
1	239F8-20002		BRACKET,LIFT	ﾌﾞﾗｹｯﾄ	1	
-	539F1-64001		BRACKET,LIFT	ﾌﾞﾗｹｯﾄ	1	[WF134][WF135][WF138]
-	539F1-64011		BRACKET,LIFT	ﾌﾞﾗｹｯﾄ	1	[WF135][WF138][WF146] [WF150][WF154]
-	539F3-71001		BRACKET,LIFT	ﾌﾞﾗｹｯﾄ	1	[TRB][TRV][TC]
-	539F3-71501		BRACKET,LIFT	ﾌﾞﾗｹｯﾄ	1	[TRB/WF138]
-	539F3-71601		BRACKET,LIFT	ﾌﾞﾗｹｯﾄ	1	[TRB/WF154]
2	277P8-22051		ROLLER,END	ﾛｰﾗ	2	
-	577P3-74001		ROLLER,END	ﾛｰﾗ	2	[FC][FCS35][FCS55][CS35] [CSA][FCS45]
3	277P8-22051		ROLLER,END	ﾛｰﾗ	4	
-	277P8-22061		ROLLER,END	ﾛｰﾗ	(6)	
-	577P3-74001		ROLLER,END	ﾛｰﾗ	4	[FC][FCS35][FCS55][CS35] [CSA][FCS45]
-	577P3-74011		ROLLER,END	ﾛｰﾗ	(6)	[FC][FCS35][FCS55][CS35] [CSA][FCS45]
4	02100-00045		RING,SNAP	ｽﾅｯﾌﾟﾘﾝｸﾞ	2	
5	277P8-22071		SHIM,T-0.5	ｼﾑ	5	
6	277P8-22081		SHIM,T-1.0	ｼﾑ	5	
7	23458-32052		ROLLER,SIDE	ﾛｰﾗ	2	
-	514A3-71702		ROLLER,SIDE	ﾛｰﾗ	2	[FC][FCS35][FCS55][CS35] [CSA][FCS45]
8	22548-34031		SPACER	ｽﾍﾟｰｻ	4	
9	22548-34051		SHIM	ｼﾑ	5	
10	22548-34061		SHIM	ｼﾑ	5	
11	01184-12050		BOLT & WASHER	ﾎﾞﾙﾄ&ﾜｯｼｬ	4	
-	01184-12040		BOLT & WASHER	ﾎﾞﾙﾄ&ﾜｯｼｬ	4	[FC][FCS35][FCS55][CS35] [CSA][FCS45]
12	01184-12025		BOLT & WASHER	ﾎﾞﾙﾄ&ﾜｯｼｬ	1	

FIG.185 BACKREST [VM39F]

(M5028240) ﾊﾞｯｸﾚｽﾄ

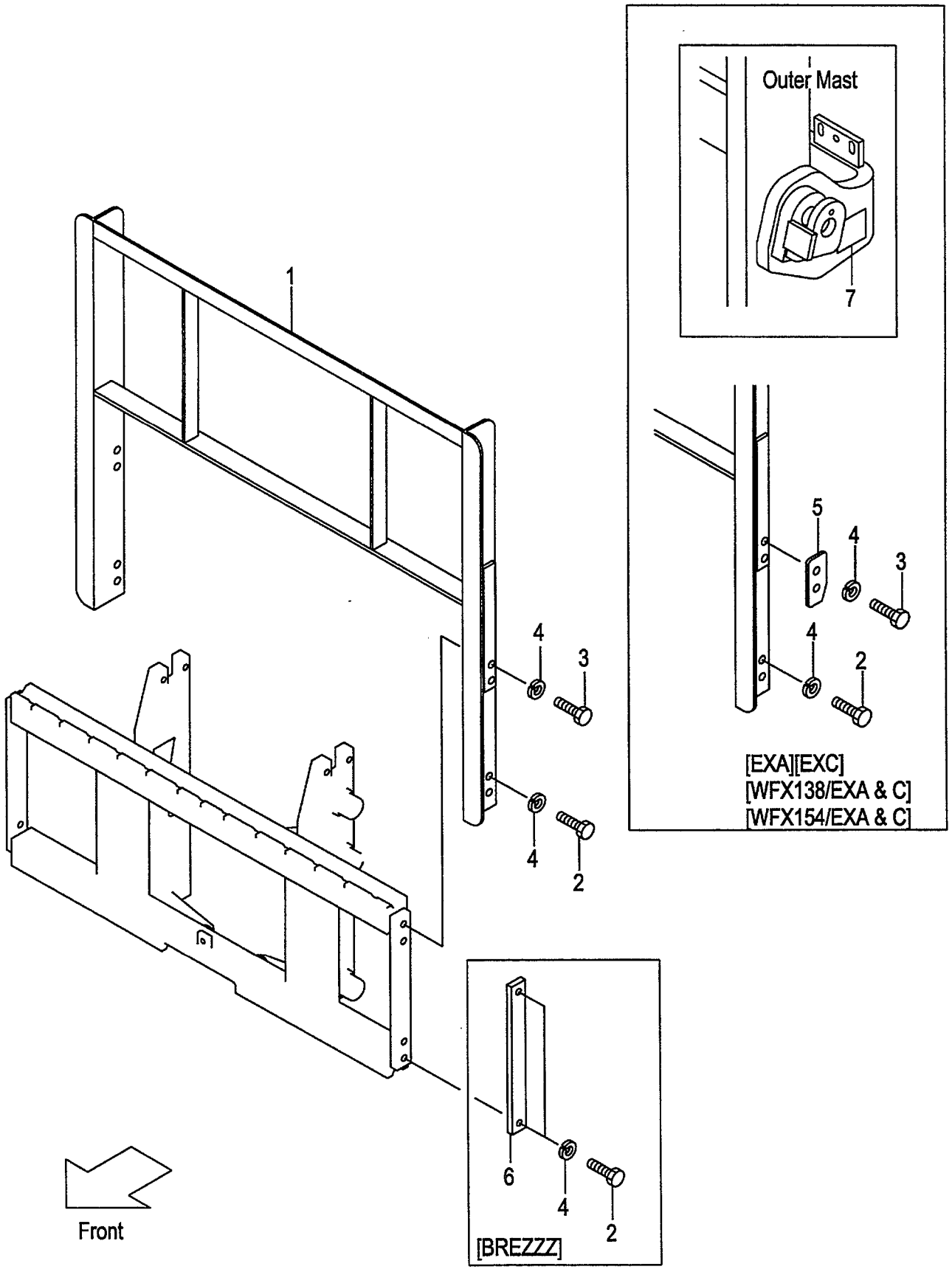

A:VM39F

Item No	Part No.	Mark	Description		Req'd	Remarks : Serial No.
1	234F8-22201		BACKREST	ﾊﾞｯｸﾚｽﾄ	1	
-	534F2-74001		BACKREST	ﾊﾞｯｸﾚｽﾄ	1	[EXA][EXC]
-	234F8-22101		BACKREST	ﾊﾞｯｸﾚｽﾄ	1	[HBR130]
-	234F8-22111		BACKREST	ﾊﾞｯｸﾚｽﾄ	1	[HBR140]
-	234F8-22121		BACKREST	ﾊﾞｯｸﾚｽﾄ	1	[HBR150]
-	534F1-64401		BACKREST	ﾊﾞｯｸﾚｽﾄ	1	[WFX138][WFX138/EXA] [WFX138/EXC]
-	534F1-64411		BACKREST	ﾊﾞｯｸﾚｽﾄ	1	[WFX154][WFX154/EXA]
2	01100-14025		BOLT	ﾎﾞﾙﾄ	4	
-	01100-14030		BOLT	ﾎﾞﾙﾄ	4	[HBR]
-	01100-14025		BOLT	ﾎﾞﾙﾄ	4	[BREZZZ]
3	01100-14030		BOLT	ﾎﾞﾙﾄ	4	(WITHOUT BREZZZ)
-	01100-14035		BOLT	ﾎﾞﾙﾄ	4	[EXA][EXC][WFX138/EXA&C] [WFX154/EXA&C]
-	01100-14030		BOLT	ﾎﾞﾙﾄ	4	[HBR]
4	02010-00014		WASHER	ﾜｯｼｬ	8	
-	02010-00014		WASHER	ﾜｯｼｬ	4	[BREZZZ]
5	534A2-74051		PLATE	ﾌﾟﾚｰﾄ	2	[EXA][EXC][WFX138/EXA&C] [WFX154/EXA&C]
6	24450-92021		PLATE	ﾌﾟﾚｰﾄ	2	[BREZZZ]
7	534A2-74301		DECAL	ﾃﾞｶﾙ	1	[EXA][EXC][WFX138/EXA&C] [WFX154/EXA&C]

FIG.186 MAST [VM39F]

(M5028320) マスト

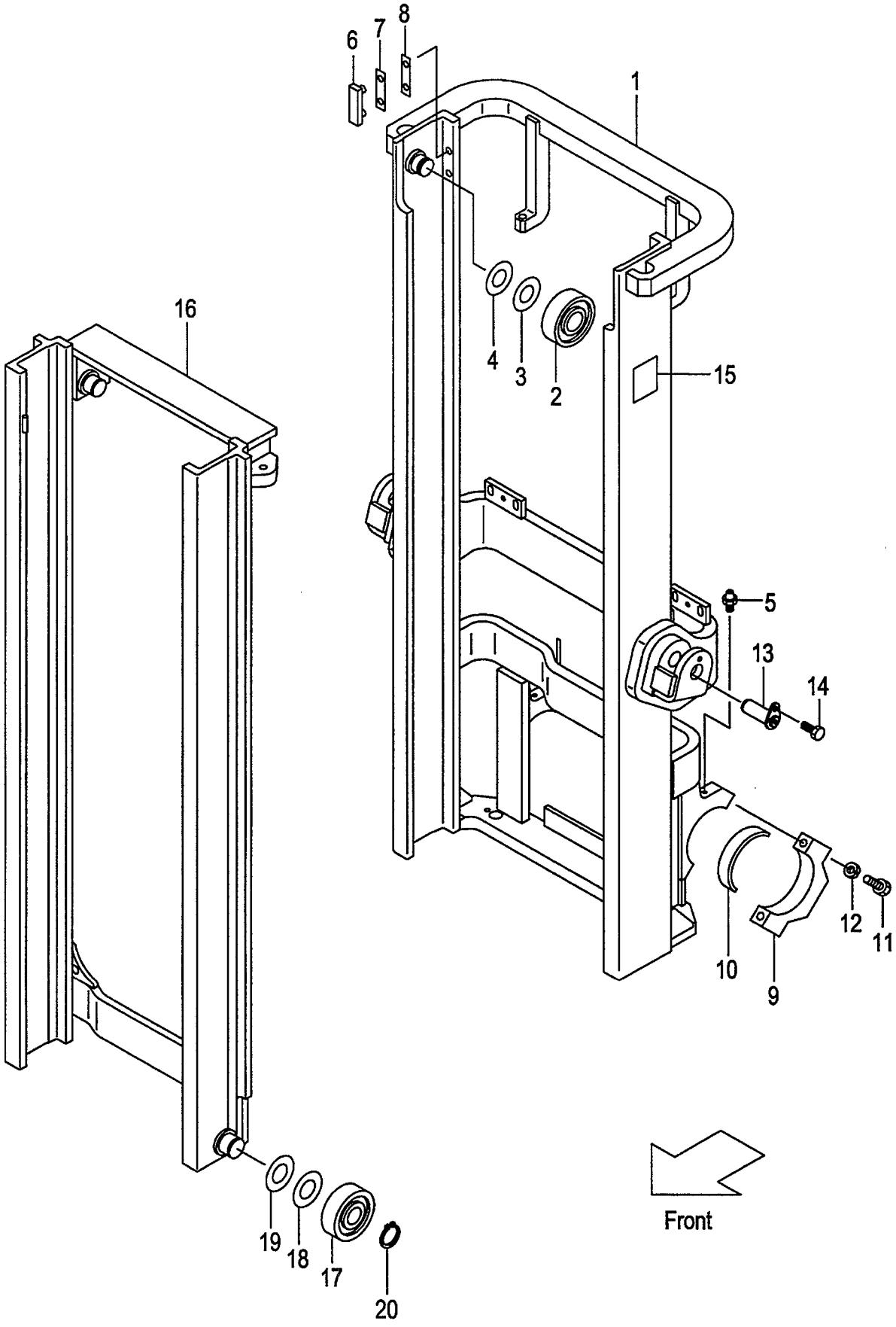

A:VM39F

Item No	Part No.	Mark	Description		Req'd	Remarks : Serial No.
1	239F8-30012		MAST,OUTER VM200	ｱｳﾀﾏｽﾄ	1	
-	239F8-30022		MAST,OUTER VM225	ｱｳﾀﾏｽﾄ	1	
-	239F8-30032		MAST,OUTER VM250	ｱｳﾀﾏｽﾄ	1	
-	239F8-30042		MAST,OUTER VM270	ｱｳﾀﾏｽﾄ	1	
-	239F8-30052		MAST,OUTER VM275	ｱｳﾀﾏｽﾄ	1	
-	239F8-30002		MAST,OUTER VM300	ｱｳﾀﾏｽﾄ	1	
-	239F8-30062		MAST,OUTER VM325	ｱｳﾀﾏｽﾄ	1	
-	239F8-30072		MAST,OUTER VM330	ｱｳﾀﾏｽﾄ	1	
-	239F8-30082		MAST,OUTER VM350	ｱｳﾀﾏｽﾄ	1	
-	239F8-30092		MAST,OUTER VM366	ｱｳﾀﾏｽﾄ	1	
-	239F8-30102		MAST,OUTER VM370	ｱｳﾀﾏｽﾄ	1	
-	239F8-30112		MAST,OUTER VM375	ｱｳﾀﾏｽﾄ	1	
-	239F8-30122		MAST,OUTER VM400	ｱｳﾀﾏｽﾄ	1	
-	239F8-30132		MAST,OUTER VM425	ｱｳﾀﾏｽﾄ	1	
-	239F8-30142		MAST,OUTER VM450	ｱｳﾀﾏｽﾄ	1	
-	239F8-30152		MAST,OUTER VM475	ｱｳﾀﾏｽﾄ	1	
-	239F8-30162		MAST,OUTER VM500	ｱｳﾀﾏｽﾄ	1	
-	239F8-30172		MAST,OUTER VM550	ｱｳﾀﾏｽﾄ	1	
-	239F8-30182		MAST,OUTER VM600	ｱｳﾀﾏｽﾄ	1	
-	539F3-91011		MAST,OUTER VM200	ｱｳﾀﾏｽﾄ	1	[RW/HC][EXR]
-	539F3-91021		MAST,OUTER VM225	ｱｳﾀﾏｽﾄ	1	[RW/HC][EXR]
-	539F3-91031		MAST,OUTER VM250	ｱｳﾀﾏｽﾄ	1	[RW/HC][EXR]
-	539F3-91041		MAST,OUTER VM270	ｱｳﾀﾏｽﾄ	1	[RW/HC][EXR]
-	539F3-91051		MAST,OUTER VM275	ｱｳﾀﾏｽﾄ	1	[RW/HC][EXR]
-	539F3-91001		MAST,OUTER VM300	ｱｳﾀﾏｽﾄ	1	[RW/HC][EXR]
-	539F3-91061		MAST,OUTER VM325	ｱｳﾀﾏｽﾄ	1	[RW/HC][EXR]
-	539F3-91071		MAST,OUTER VM330	ｱｳﾀﾏｽﾄ	1	[RW/HC][EXR]
-	539F3-91081		MAST,OUTER VM350	ｱｳﾀﾏｽﾄ	1	[RW/HC][EXR]
-	539F3-91091		MAST,OUTER VM366	ｱｳﾀﾏｽﾄ	1	[RW/HC][EXR]
-	539F3-91101		MAST,OUTER VM370	ｱｳﾀﾏｽﾄ	1	[RW/HC][EXR]
-	539F3-91111		MAST,OUTER VM375	ｱｳﾀﾏｽﾄ	1	[RW/HC][EXR]
-	539F3-91121		MAST,OUTER VM400	ｱｳﾀﾏｽﾄ	1	[RW/HC][EXR]
-	539F3-91131		MAST,OUTER VM425	ｱｳﾀﾏｽﾄ	1	[RW/HC][EXR]
-	539F3-91141		MAST,OUTER VM450	ｱｳﾀﾏｽﾄ	1	[RW/HC][EXR]
-	539F3-91151		MAST,OUTER VM475	ｱｳﾀﾏｽﾄ	1	[RW/HC][EXR]
-	539F3-91161		MAST,OUTER VM500	ｱｳﾀﾏｽﾄ	1	[RW/HC][EXR]
-	539F3-91171		MAST,OUTER VM550	ｱｳﾀﾏｽﾄ	1	[RW/HC][EXR]
-	539F3-91181		MAST,OUTER VM600	ｱｳﾀﾏｽﾄ	1	[RW/HC][EXR]
2	277P8-22051		ROLLER,END	ﾛｰﾗ	2	
-	577P3-74001		ROLLER,END	ﾛｰﾗ	2	[FC][FCS35][FCS55][CS35] [CSA][FCS45]
3	277P8-22071		SHIM,T-0.5	ｼﾑ	12	
4	277P8-22081		SHIM,T-1.0	ｼﾑ	12	
5	04901-00100		FITTING	ﾌｨｯﾃｨﾝｸﾞ	2	
6	216G8-33401		SLIPPER	ｽﾘｯﾊﾟ	2	
7	216G8-33361		SHIM,T-0.5	ｼﾑ	8	
8	216G8-33371		SHIM,T-1.0	ｼﾑ	4	
9	22018-30065		CAP	ｷｬｯﾌﾟ	2	
10	214A8-02201		BUSHING	ﾌﾞｯｼﾝｸﾞ	2	
11	01103-16065		BOLT	ﾎﾞﾙﾄ	4	

FIG.186 MAST [VM39F]

(M5028320) マスト

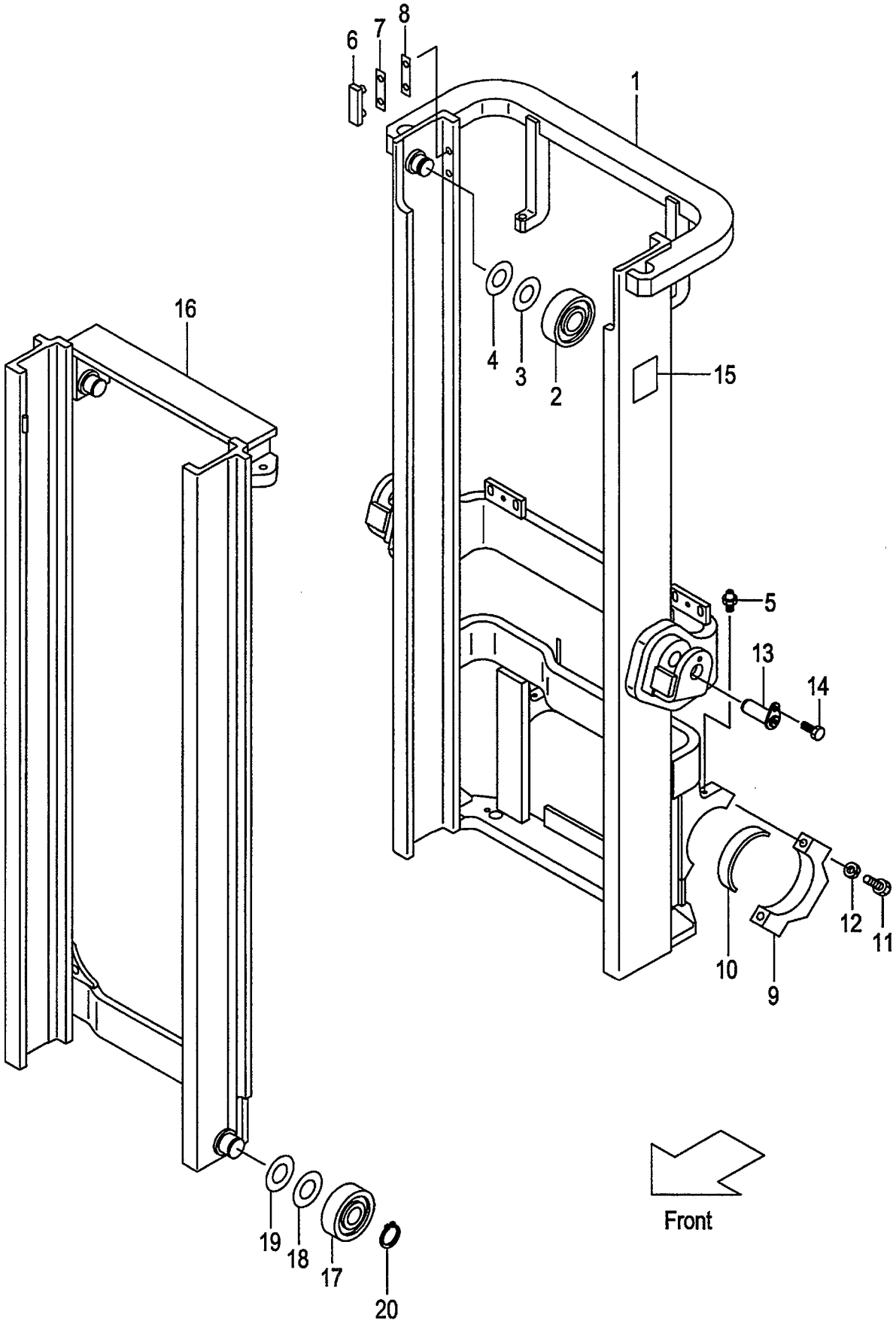

A:VM39F

Item No	Part No.	Mark	Description		Req'd	Remarks : Serial No.
12	02011-00016		WASHER	ﾜｯｼｬ	4	
13	234A8-02001		PIN	ﾋﾟﾝ	2	
14	216G8-52301		BOLT & WASHER	ﾎﾞﾙﾄ&ﾜｯｼｬ	2	
15	23678-06002		PLATE,NAME	ﾌﾟﾚｰﾄ	1	
16	239F8-30212		MAST,INNER VM200	ｲﾝﾅﾏｽﾄ	1	
-	239F8-30222		MAST,INNER VM225	ｲﾝﾅﾏｽﾄ	1	
-	239F8-30232		MAST,INNER VM250	ｲﾝﾅﾏｽﾄ	1	
-	239F8-30242		MAST,INNER VM270	ｲﾝﾅﾏｽﾄ	1	
-	239F8-30252		MAST,INNER VM275	ｲﾝﾅﾏｽﾄ	1	
-	239F8-30202		MAST,INNER VM300	ｲﾝﾅﾏｽﾄ	1	
-	239F8-30262		MAST,INNER VM325	ｲﾝﾅﾏｽﾄ	1	
-	239F8-30272		MAST,INNER VM330	ｲﾝﾅﾏｽﾄ	1	
-	239F8-30282		MAST,INNER VM350	ｲﾝﾅﾏｽﾄ	1	
-	239F8-30292		MAST,INNER VM366	ｲﾝﾅﾏｽﾄ	1	
-	239F8-30302		MAST,INNER VM370	ｲﾝﾅﾏｽﾄ	1	
-	239F8-30312		MAST,INNER VM375	ｲﾝﾅﾏｽﾄ	1	
-	239F8-30322		MAST,INNER VM400	ｲﾝﾅﾏｽﾄ	1	
-	239F8-30332		MAST,INNER VM425	ｲﾝﾅﾏｽﾄ	1	
-	239F8-30342		MAST,INNER VM450	ｲﾝﾅﾏｽﾄ	1	
-	239F8-30352		MAST,INNER VM475	ｲﾝﾅﾏｽﾄ	1	
-	239F8-30362		MAST,INNER VM500	ｲﾝﾅﾏｽﾄ	1	
-	239F8-30372		MAST,INNER VM550	ｲﾝﾅﾏｽﾄ	1	
-	239F8-30382		MAST,INNER VM600	ｲﾝﾅﾏｽﾄ	1	
17	277P8-22051		ROLLER,END	ﾛｰﾗ	2	
-	277P8-22061		ROLLER,END	ﾛｰﾗ	(2)	
-	577P3-74001		ROLLER,END	ﾛｰﾗ	2	[FC][FCS35][FCS55][CS35] [FCS45]
-	577P3-74011		ROLLER,END	ﾛｰﾗ	(2)	[FC][FCS35][FCS55][CS35] [FCS45]
18	277P8-22071		SHIM,T-0.5	ｼﾑ	12	
19	277P8-22081		SHIM,T-1.0	ｼﾑ	12	
20	09192-30044		RING,SNAP	ｽﾅｯﾌﾟﾘﾝｸﾞ	2	

FIG.187 TILT GAUGE [VM39F]

(M5028330) ﾃｨﾙﾄｹﾞｰｼﾞ

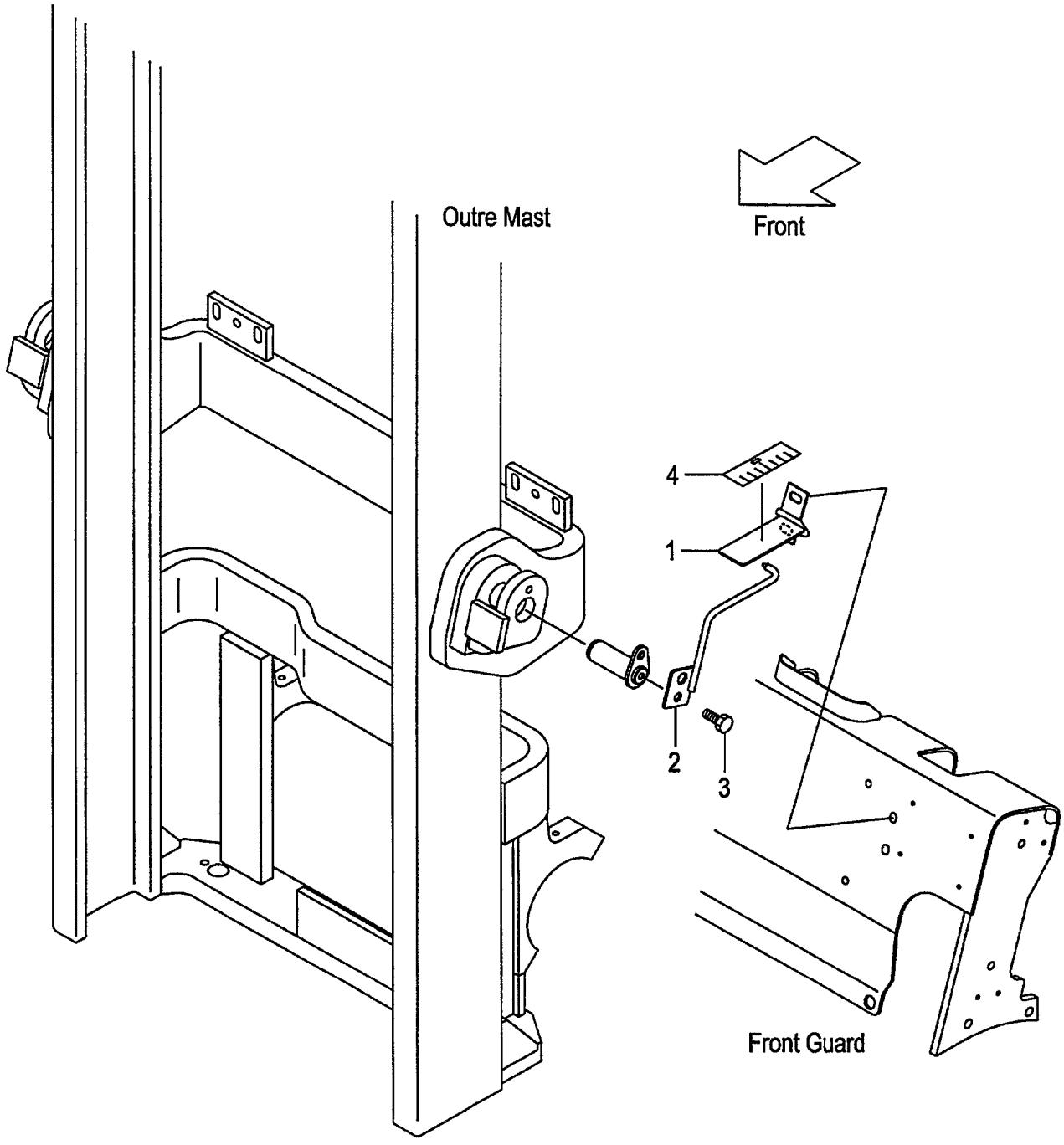

FIG.187
(M5028330)

A:VM39F

Item No	Part No.	Mark	Description		Req'd	Remarks : Serial No.
1	639A0-10011		GAUGE,TILT	ｹﾞｰｼﾞ	1	[VM250-600/(TG,PPC,PR,PRX)]
-	639A0-10011		GAUGE,TILT	ｹﾞｰｼﾞ	1	[VM250-600/(PRC,MPC,MPX)]
2	639A0-10051		INDICATOR	ｲﾝｼﾞｹｰﾀ	1	[VM250-600/(TG,PPC,PR,PRX)]
-	639A0-10051		INDICATOR	ｲﾝｼﾞｹｰﾀ	1	[VM250-600/(PRC,MPC,MPX)]
3	216G4-12251		BOLT	ﾎﾞﾙﾄ	1	[VM250-600/(TG,PPC,PR,PRX)]
-	216G4-12251		BOLT	ﾎﾞﾙﾄ	1	[VM250-600/(PRC,MPC,MPX)]
4	62459-23371		SEAL,GAUGE	ｼｰﾙ	1	[VM250-600/(TG,PPC,PR,PRX)]
-	62459-23371		SEAL,GAUGE	ｼｰﾙ	1	[VM250-600/(PRC,MPC,MPX)]

FIG.188 LIFT CYLINDER [VM39F]

(M5028430) リフトシリンダ

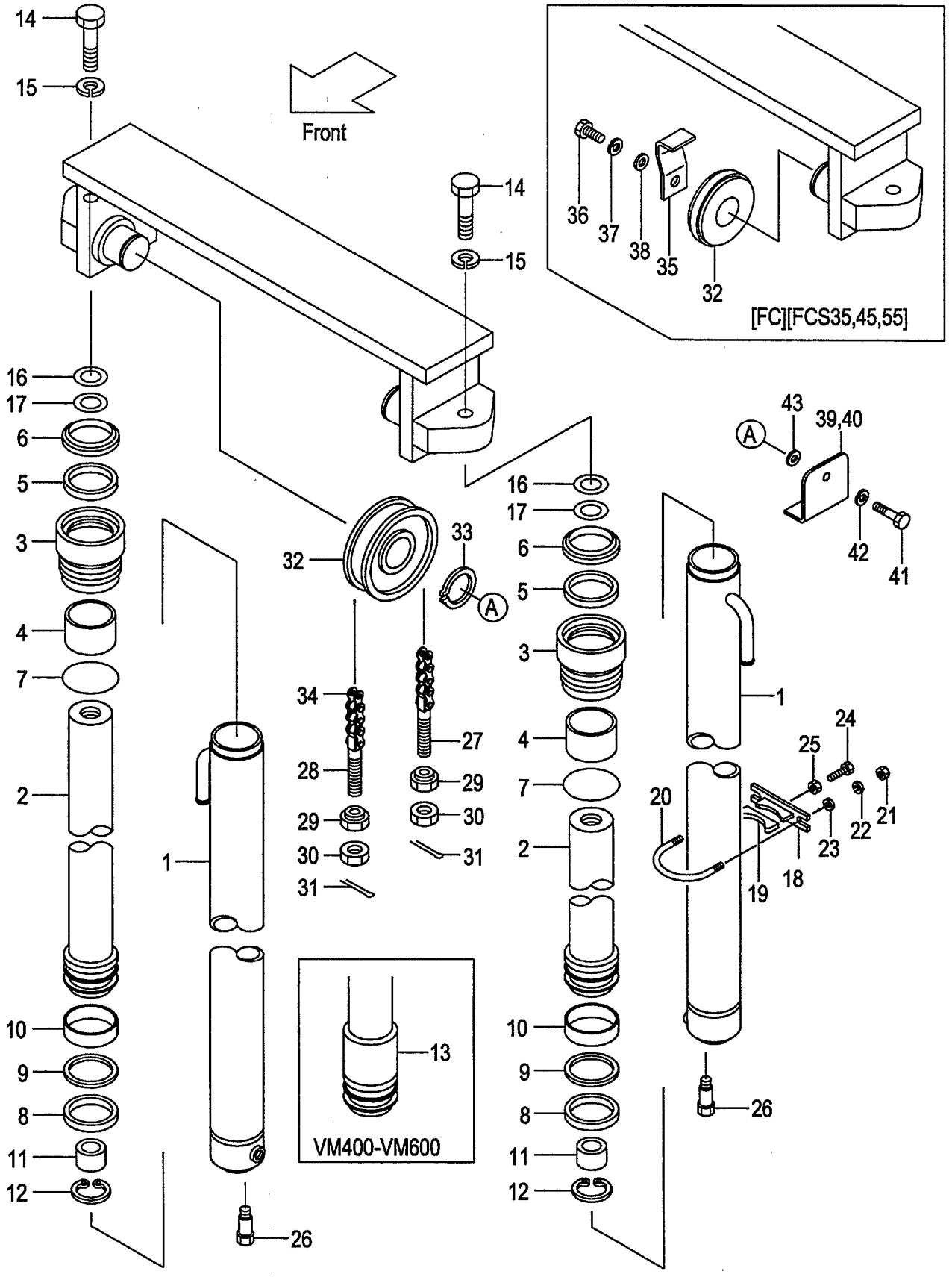

A:VM39F

Item No	Part No.	Mark	Description	Req'd	Remarks : Serial No.
A1	277T8-40011		CYL-ASSY,LIFT VM200 ﾘﾌﾄｼﾘﾝﾀﾞｱｯｾﾝ	2	INC.1-12
-	277T8-40021		CYL-ASSY,LIFT VM225 ﾘﾌﾄｼﾘﾝﾀﾞｱｯｾﾝ	2	INC.1-12
-	277T8-40031		CYL-ASSY,LIFT VM250 ﾘﾌﾄｼﾘﾝﾀﾞｱｯｾﾝ	2	INC.1-12
-	277T8-40041		CYL-ASSY,LIFT VM270 ﾘﾌﾄｼﾘﾝﾀﾞｱｯｾﾝ	2	INC.1-12
-	277T8-40051		CYL-ASSY,LIFT VM275 ﾘﾌﾄｼﾘﾝﾀﾞｱｯｾﾝ	2	INC.1-12
-	277T8-40001		CYL-ASSY,LIFT VM300 ﾘﾌﾄｼﾘﾝﾀﾞｱｯｾﾝ	2	INC.1-12
-	277T8-40061		CYL-ASSY,LIFT VM325 ﾘﾌﾄｼﾘﾝﾀﾞｱｯｾﾝ	2	INC.1-12
-	277T8-40071		CYL-ASSY,LIFT VM330 ﾘﾌﾄｼﾘﾝﾀﾞｱｯｾﾝ	2	INC.1-12
-	277T8-40081		CYL-ASSY,LIFT VM350 ﾘﾌﾄｼﾘﾝﾀﾞｱｯｾﾝ	2	INC.1-12
-	277T8-40091		CYL-ASSY,LIFT VM366 ﾘﾌﾄｼﾘﾝﾀﾞｱｯｾﾝ	2	INC.1-12
-	277T8-40101		CYL-ASSY,LIFT VM370 ﾘﾌﾄｼﾘﾝﾀﾞｱｯｾﾝ	2	INC.1-12
-	277T8-40111		CYL-ASSY,LIFT VM375 ﾘﾌﾄｼﾘﾝﾀﾞｱｯｾﾝ	2	INC.1-12
-	277T8-40121		CYL-ASSY,LIFT VM400 ﾘﾌﾄｼﾘﾝﾀﾞｱｯｾﾝ	2	INC.1-13
-	277T8-40131		CYL-ASSY,LIFT VM425 ﾘﾌﾄｼﾘﾝﾀﾞｱｯｾﾝ	2	INC.1-13
-	277T8-40141		CYL-ASSY,LIFT VM450 ﾘﾌﾄｼﾘﾝﾀﾞｱｯｾﾝ	2	INC.1-13
-	277T8-40151		CYL-ASSY,LIFT VM475 ﾘﾌﾄｼﾘﾝﾀﾞｱｯｾﾝ	2	INC.1-13
-	277T8-40161		CYL-ASSY,LIFT VM500 ﾘﾌﾄｼﾘﾝﾀﾞｱｯｾﾝ	2	INC.1-13
-	277T8-40171		CYL-ASSY,LIFT VM550 ﾘﾌﾄｼﾘﾝﾀﾞｱｯｾﾝ	2	INC.1-13
-	277T8-40181		CYL-ASSY,LIFT VM600 ﾘﾌﾄｼﾘﾝﾀﾞｱｯｾﾝ	2	INC.1-13
1	B-30697-54101		BODY,CYL VM200 ﾎﾞﾃﾞｨ	2	
-	B-30697-54201		BODY,CYL VM225 ﾎﾞﾃﾞｨ	2	
-	B-30697-54301		BODY,CYL VM250 ﾎﾞﾃﾞｨ	2	
-	B-30697-54401		BODY,CYL VM270 ﾎﾞﾃﾞｨ	2	
-	B-30697-54501		BODY,CYL VM275 ﾎﾞﾃﾞｨ	2	
-	B-30697-54601		BODY,CYL VM300 ﾎﾞﾃﾞｨ	2	
-	B-30697-54701		BODY,CYL VM325 ﾎﾞﾃﾞｨ	2	
-	B-30697-54801		BODY,CYL VM330 ﾎﾞﾃﾞｨ	2	
-	B-30697-54901		BODY,CYL VM350 ﾎﾞﾃﾞｨ	2	
-	B-30697-55001		BODY,CYL VM366 ﾎﾞﾃﾞｨ	2	
-	B-30697-55101		BODY,CYL VM370 ﾎﾞﾃﾞｨ	2	
-	B-30697-55201		BODY,CYL VM375 ﾎﾞﾃﾞｨ	2	
-	B-30697-55301		BODY,CYL VM400 ﾎﾞﾃﾞｨ	2	
-	B-30697-55401		BODY,CYL VM425 ﾎﾞﾃﾞｨ	2	
-	B-30697-55501		BODY,CYL VM450 ﾎﾞﾃﾞｨ	2	
-	B-30697-55601		BODY,CYL VM475 ﾎﾞﾃﾞｨ	2	
-	B-30697-55701		BODY,CYL VM500 ﾎﾞﾃﾞｨ	2	
-	B-30697-55801		BODY,CYL VM550 ﾎﾞﾃﾞｨ	2	
-	B-30697-55901		BODY,CYL VM600 ﾎﾞﾃﾞｨ	2	
2	B-30697-54102		ROD,PISTON VM200 ﾛｯﾄﾞ	2	
-	B-30697-54202		ROD,PISTON VM225 ﾛｯﾄﾞ	2	
-	B-30697-54302		ROD,PISTON VM250 ﾛｯﾄﾞ	2	
-	B-30697-54402		ROD,PISTON VM270 ﾛｯﾄﾞ	2	
-	B-30697-54502		ROD,PISTON VM275 ﾛｯﾄﾞ	2	
-	B-30697-54602		ROD,PISTON VM300 ﾛｯﾄﾞ	2	
-	B-30697-54702		ROD,PISTON VM325 ﾛｯﾄﾞ	2	
-	B-30697-54802		ROD,PISTON VM330 ﾛｯﾄﾞ	2	
-	B-30697-54902		ROD,PISTON VM350 ﾛｯﾄﾞ	2	
-	B-30697-55002		ROD,PISTON VM366 ﾛｯﾄﾞ	2	
-	B-30697-55102		ROD,PISTON VM370 ﾛｯﾄﾞ	2	
-	B-30697-55202		ROD,PISTON VM375 ﾛｯﾄﾞ	2	

FIG.188 LIFT CYLINDER [VM39F]

(M5028430) リフトシリンダ

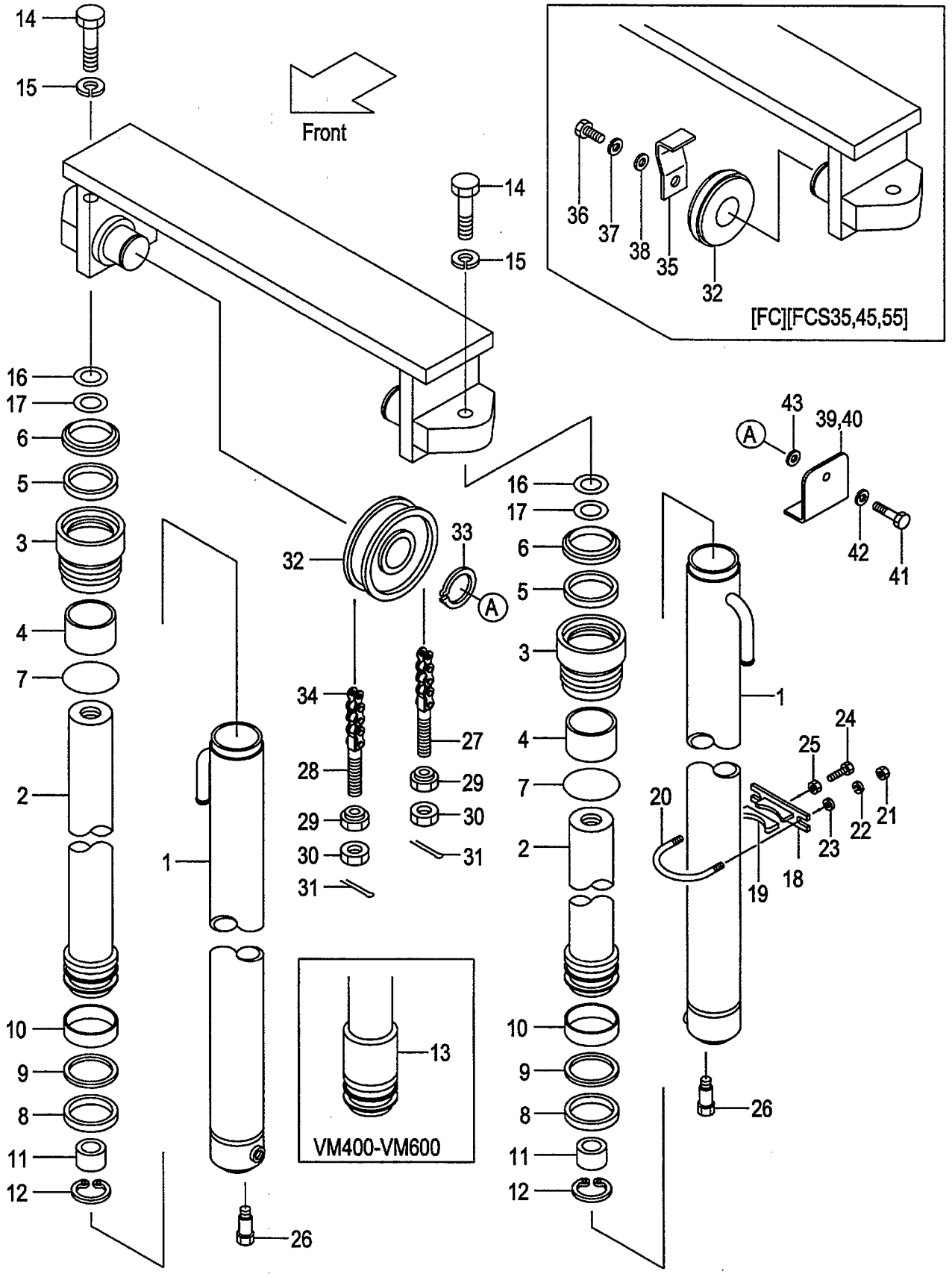

A:VM39F

Item No	Part No.	Mark	Description		Req'd	Remarks : Serial No.
-	B-30697-55302		ROD,PISTON VM400	ﾛｯﾄﾞ	2	
-	B-30697-55402		ROD,PISTON VM425	ﾛｯﾄﾞ	2	
-	B-30697-55502		ROD,PISTON VM450	ﾛｯﾄﾞ	2	
-	B-30697-55602		ROD,PISTON VM475	ﾛｯﾄﾞ	2	
-	B-30697-55702		ROD,PISTON VM500	ﾛｯﾄﾞ	2	
-	B-30697-55802		ROD,PISTON VM550	ﾛｯﾄﾞ	2	
-	B-30697-55902		ROD,PISTON VM600	ﾛｯﾄﾞ	2	
3	B-30121-55043	*	CAP	ｷｬｯﾌﾟ	2	
4	B-30131-45017	*	BUSHING	ﾌﾞｯｼﾝｸﾞ	2	
5	B-30961-04512	*	U-RING	Uﾘﾝｸﾞ	2	
6	B-30191-45025	*	WIPER	ﾜｲﾊﾟ	2	
7	B-30161-91775	*	O-RING	Oﾘﾝｸﾞ	2	
8	B-30161-55046	*	U-RING	Uﾘﾝｸﾞ	2	
9	B-30461-55039	*	RING,BACK-UP	ﾘﾝｸﾞ	2	
10	B-30131-55018		BUSHING	ﾌﾞｯｼﾝｸﾞ	2	
11	B-30551-91001		RING	ﾘﾝｸﾞ	2	
12	B-30141-91048		RING,SNAP	ｽﾅｯﾌﾟﾘﾝｸﾞ	2	
13	B-30296-72103		SPACER VM400	ｽﾍﾟｰｻ	2	
-	B-30296-72103		SPACER VM425	ｽﾍﾟｰｻ	2	
-	B-30296-72103		SPACER VM450	ｽﾍﾟｰｻ	2	
-	B-30296-72103		SPACER VM475	ｽﾍﾟｰｻ	2	
-	B-30296-72103		SPACER VM500	ｽﾍﾟｰｻ	2	
-	B-30046-67103		SPACER VM550	ｽﾍﾟｰｻ	2	
-	B-30046-67103		SPACER VM600	ｽﾍﾟｰｻ	2	
14	01103-14040		BOLT	ﾎﾞﾙﾄ	2	
15	02011-00014		WASHER	ﾜｯｼｬ	2	
16	22517-40051		SHIM	ｼﾑ	4	
17	22717-40081		SHIM	ｼﾑ	4	
A2	215E8-42171		SUPPORT-ASSY	ｻﾎﾟｰﾄｱｯｾﾝ	2	INC.18,19
18	215E8-42181		SUPPORT	ｻﾎﾟｰﾄ	2	
19	24868-42111		RUBBER	ﾗﾊﾞｰ	2	
20	234A8-42551		U-BOLT	Uﾎﾞﾙﾄ	2	
21	234A8-42561		NUT	ﾅｯﾄ	4	
22	02010-20010		WASHER	ﾜｯｼｬ	4	
23	02000-20010		WASHER	ﾜｯｼｬ	4	
24	232A8-42201		BOLT	ﾎﾞﾙﾄ	2	
25	234A8-42571		NUT	ﾅｯﾄ	2	
26	214A8-42661		BOLT	ﾎﾞﾙﾄ	2	
27	215K0-82701		PIN,ANCHOR	ﾋﾟﾝ	2	
-	23658-42531		PIN,ANCHOR	ﾋﾟﾝ	2	[FC][FCS35][FCS45][FCS55]
28	24459-42391		PIN,ANCHOR	ﾋﾟﾝ	2	
-	22218-42111		PIN,ANCHOR	ﾋﾟﾝ	2	[FC][FCS35][FCS45][FCS55]
29	22218-40191		NUT	ﾅｯﾄ	4	
30	01400-00018		NUT	ﾅｯﾄ	4	
31	02200-03040		PIN	ﾋﾟﾝ	4	
32	234A8-43501		SHEAVE	ｼｰﾌﾞ	2	
-	22208-40031		SHEAVE	ｼｰﾌﾞ	2	[FC][FCS35][FCS45][FCS55]
33	02100-00040		RING,SNAP	ｽﾅｯﾌﾟﾘﾝｸﾞ	2	
34	22438-45551		CHAIN VM200	ﾁｪｰﾝ	2	
-	22438-45591		CHAIN VM225	ﾁｪｰﾝ	2	

FIG.188 LIFT CYLINDER [VM39F]

(M5028430) リフトシリンダ

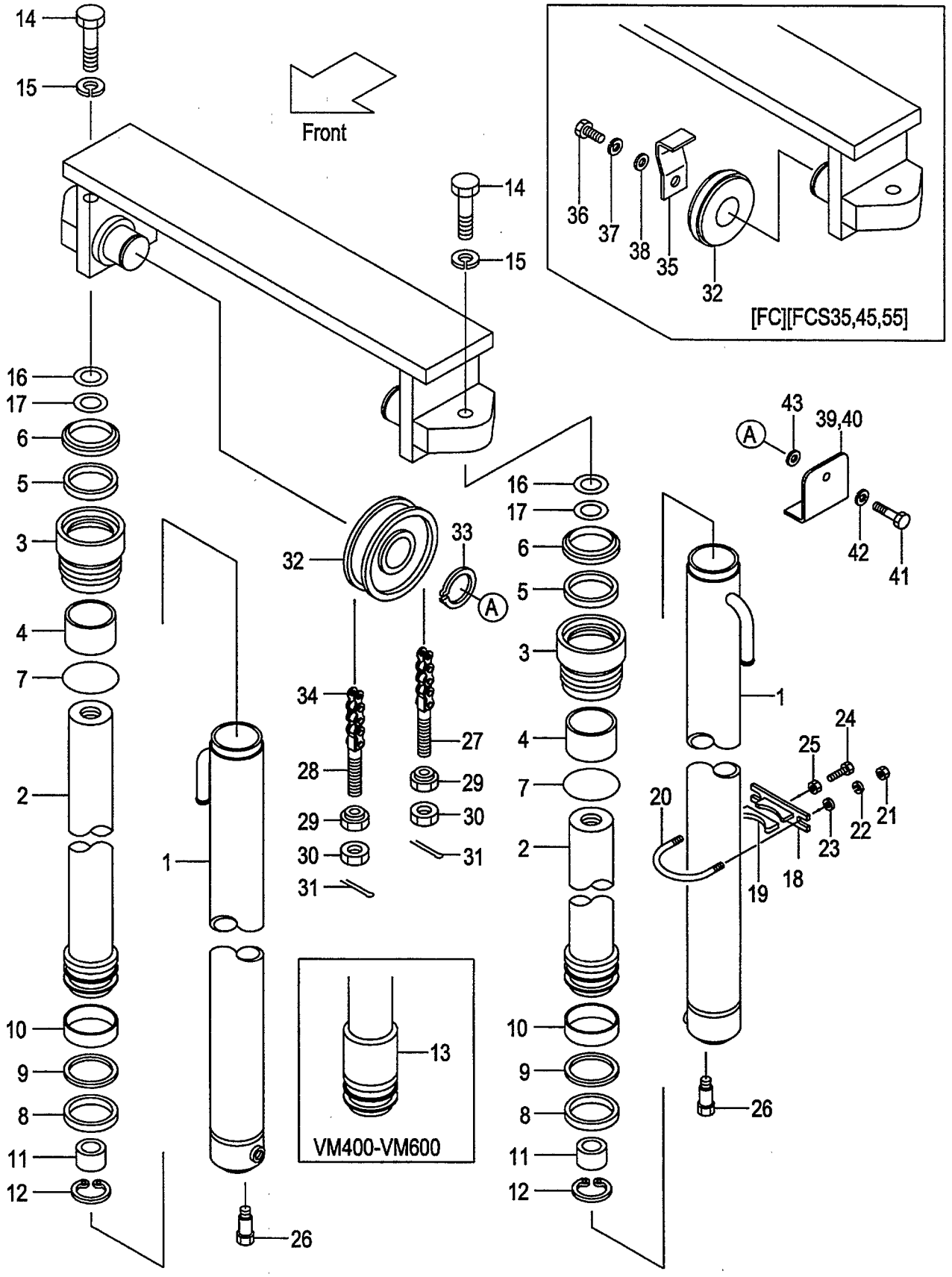

A:VM39F

Item No	Part No.	Mark	Description		Req'd	Remarks : Serial No.
-	22438-45651		CHAIN VM250	ﾁｪｰﾝ	2	
-	22438-45691		CHAIN VM270	ﾁｪｰﾝ	2	
-	22438-45691		CHAIN VM275	ﾁｪｰﾝ	2	
-	22438-45751		CHAIN VM300	ﾁｪｰﾝ	2	
-	22438-45791		CHAIN VM325	ﾁｪｰﾝ	2	
-	22438-45811		CHAIN VM330	ﾁｪｰﾝ	2	
-	22438-45851		CHAIN VM350	ﾁｪｰﾝ	2	
-	22438-45871		CHAIN VM366	ﾁｪｰﾝ	2	
-	22438-45891		CHAIN VM370	ﾁｪｰﾝ	2	
-	22438-45891		CHAIN VM375	ﾁｪｰﾝ	2	
-	22438-45971		CHAIN VM400	ﾁｪｰﾝ	2	
-	22438-46011		CHAIN VM425	ﾁｪｰﾝ	2	
-	22438-46071		CHAIN VM450	ﾁｪｰﾝ	2	
-	22438-46111		CHAIN VM475	ﾁｪｰﾝ	2	
-	22438-46151		CHAIN VM500	ﾁｪｰﾝ	2	
-	22438-46271		CHAIN VM550	ﾁｪｰﾝ	2	
-	22438-46371		CHAIN VM600	ﾁｪｰﾝ	2	
-	09001-10043		CHAIN VM200	ﾁｪｰﾝ	2	[FC][FCS35][FCS45][FCS55]
-	09001-10047		CHAIN VM225	ﾁｪｰﾝ	2	[FC][FCS35][FCS45][FCS55]
-	09001-10051		CHAIN VM250	ﾁｪｰﾝ	2	[FC][FCS35][FCS45][FCS55]
-	09001-10055		CHAIN VM270	ﾁｪｰﾝ	2	[FC][FCS35][FCS45][FCS55]
-	09001-10055		CHAIN VM275	ﾁｪｰﾝ	2	[FC][FCS35][FCS45][FCS55]
-	09001-10059		CHAIN VM300	ﾁｪｰﾝ	2	[FC][FCS35][FCS45][FCS55]
-	09001-10063		CHAIN VM325	ﾁｪｰﾝ	2	[FC][FCS35][FCS45][FCS55]
-	09001-10065		CHAIN VM330	ﾁｪｰﾝ	2	[FC][FCS35][FCS45][FCS55]
-	09001-10067		CHAIN VM350	ﾁｪｰﾝ	2	[FC][FCS35][FCS45][FCS55]
-	09001-10069		CHAIN VM366	ﾁｪｰﾝ	2	[FC][FCS35][FCS45][FCS55]
-	09001-10071		CHAIN VM370	ﾁｪｰﾝ	2	[FC][FCS35][FCS45][FCS55]
-	09001-10071		CHAIN VM375	ﾁｪｰﾝ	2	[FC][FCS35][FCS45][FCS55]
-	09001-10077		CHAIN VM400	ﾁｪｰﾝ	2	[FC][FCS35][FCS45][FCS55]
-	09001-10081		CHAIN VM425	ﾁｪｰﾝ	2	[FC][FCS35][FCS45][FCS55]
-	09001-10085		CHAIN VM450	ﾁｪｰﾝ	2	[FC][FCS35][FCS45][FCS55]
-	09001-10089		CHAIN VM475	ﾁｪｰﾝ	2	[FC][FCS35][FCS45][FCS55]
-	09001-10093		CHAIN VM500	ﾁｪｰﾝ	2	[FC][FCS35][FCS45][FCS55]
-	09001-10103		CHAIN VM550	ﾁｪｰﾝ	2	[FC][FCS35][FCS45][FCS55]
-	09001-10109		CHAIN VM600	ﾁｪｰﾝ	2	[FC][FCS35][FCS45][FCS55]
35	514J3-74061		STOPPER	ｽﾄｯﾊﾟ	2	[FC][FCS35][FCS45][FCS55]
36	01100-16025		BOLT	ﾎﾞﾙﾄ	2	[FC][FCS35][FCS45][FCS55]
37	02010-00016		WASHER	ﾜｯｼｬ	2	[FC][FCS35][FCS45][FCS55]
38	02000-00016		WASHER	ﾜｯｼｬ	2	[FC][FCS35][FCS45][FCS55]
39	514A3-04201		COVER,RH	ｶﾊﾞｰ	1	[EXE][EXN]
40	514A3-04211		COVER,LH	ｶﾊﾞｰ	1	[EXE][EXN]
41	01100-16016		BOLT	ﾎﾞﾙﾄ	2	[EXE][EXN]
42	02010-00016		WASHER	ﾜｯｼｬ	2	[EXE][EXN]
43	02000-00016		WASHER	ﾜｯｼｬ	2	[EXE][EXN]
K1	B-3055B-00097		KIT,CAP,CYL	ｼﾘﾝﾀﾞｷｬｯﾌﾟｷｯﾄ	2	INC.3,4
K2	B-3055A-00058		KIT,REPAIR	ﾘﾍﾟｱｷｯﾄ	2	INC.5-9

FIG.189 MAST PIPING [VM39F]

(M5028440) マストパイピング

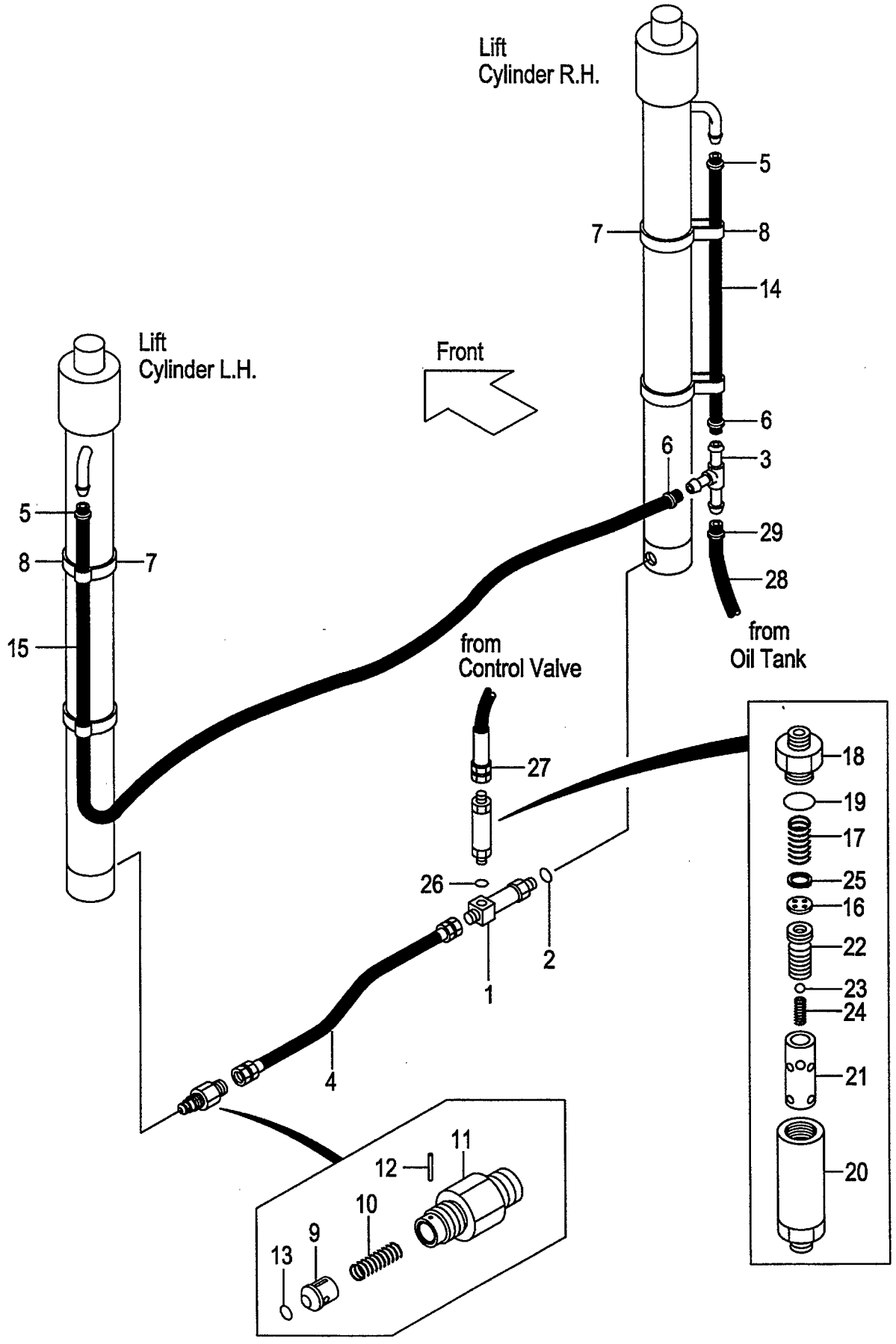

A:VM39F

Item No	Part No.	Mark	Description		Req'd	Remarks : Serial No.
A1	234A8-41101		THREE-WAY-ASSY	ｽﾘｰｳｪｲｱｯｾﾝ	1	INC.1,2
1	NO PART NO.	#	THREE-WAY	ｽﾘｰｳｴｲ	1	
2	03320-00140		O-RING	Oﾘﾝｸﾞ	1	
3	23679-45051		THREE-WAY	ｽﾘｰｳｴｲ	1	
-	53675-55051		THREE-WAY	ｽﾘｰｳｴｲ	1	[FC][RTL]
4	234A8-02201		HOSE	ﾎｰｽ	1	
5	04911-00018		CLIP	ｸﾘｯﾌﾟ	2	
-	24329-46201		CLIP	ｸﾘｯﾌﾟ	2	[FC][RTL]
6	04911-00018		CLIP	ｸﾘｯﾌﾟ	2	
-	04911-00021		CLIP	ｸﾘｯﾌﾟ	2	[FC][RTL]
7	04913-21380		BAND	ﾊﾞﾝﾄﾞ	4	
8	23678-42401		BAND,HOSE	ﾊﾞﾝﾄﾞ	4	
-	53675-54101		BAND	ﾊﾞﾝﾄﾞ	4	[FC][RTL]
A2	234A8-40701		VALVE-ASSY,CUT	ｶｯﾄﾊﾞﾙﾌﾞｱｯｾﾝ	1	INC.9-13
9	234A8-42602		PISTON	ﾋﾟｽﾄﾝ	1	
10	234A8-42611		SPRING	ｽﾌﾟﾘﾝｸﾞ	1	
11	234A8-42622		NIPPLE	ﾆｯﾌﾟﾙ	1	
12	02270-01014		PIN	ﾋﾟﾝ	1	
13	03320-00140		O-RING	Oﾘﾝｸﾞ	1	
14	23678-40060		HOSE VM200	ﾎｰｽ	1	
-	23678-40070		HOSE VM225	ﾎｰｽ	1	
-	23678-40085		HOSE VM250	ﾎｰｽ	1	
-	23678-40095		HOSE VM270,VM275	ﾎｰｽ	1	
-	23678-40110		HOSE VM300	ﾎｰｽ	1	
-	23678-40120		HOSE VM325	ﾎｰｽ	1	
-	23678-40125		HOSE VM330	ﾎｰｽ	1	
-	23678-40135		HOSE VM350	ﾎｰｽ	1	
-	23678-40145		HOSE VM366-375	ﾎｰｽ	1	
-	23678-40165		HOSE VM400	ﾎｰｽ	1	
-	23678-40175		HOSE VM425	ﾎｰｽ	1	
-	23678-40190		HOSE VM450	ﾎｰｽ	1	
-	23678-40200		HOSE VM475	ﾎｰｽ	1	
-	23678-40215		HOSE VM500	ﾎｰｽ	1	
-	23678-40245		HOSE VM550	ﾎｰｽ	1	
-	23678-40270		HOSE VM600	ﾎｰｽ	1	
-	04710-04060		HOSE VM200	ﾎｰｽ	1	[FC][RTL]
-	04710-04070		HOSE VM225	ﾎｰｽ	1	[FC][RTL]
-	04710-04085		HOSE VM250	ﾎｰｽ	1	[FC][RTL]
-	04710-04095		HOSE VM270,VM275	ﾎｰｽ	1	[FC][RTL]
-	04710-04110		HOSE VM300	ﾎｰｽ	1	[FC][RTL]
-	04710-04120		HOSE VM325	ﾎｰｽ	1	[FC][RTL]
-	04710-04125		HOSE VM330	ﾎｰｽ	1	[FC][RTL]
-	04710-04135		HOSE VM350	ﾎｰｽ	1	[FC][RTL]
-	04710-04145		HOSE VM366-375	ﾎｰｽ	1	[FC][RTL]
-	04710-04165		HOSE VM400	ﾎｰｽ	1	[FC][RTL]
-	04710-04175		HOSE VM425	ﾎｰｽ	1	[FC][RTL]
-	04710-04190		HOSE VM450	ﾎｰｽ	1	[FC][RTL]
-	04710-04200		HOSE VM475	ﾎｰｽ	1	[FC][RTL]
-	04710-04215		HOSE VM500	ﾎｰｽ	1	[FC][RTL]
-	04710-04245		HOSE VM550	ﾎｰｽ	1	[FC][RTL]

FIG.189 MAST PIPING [VM39F]

(M5028440) マストパイピング

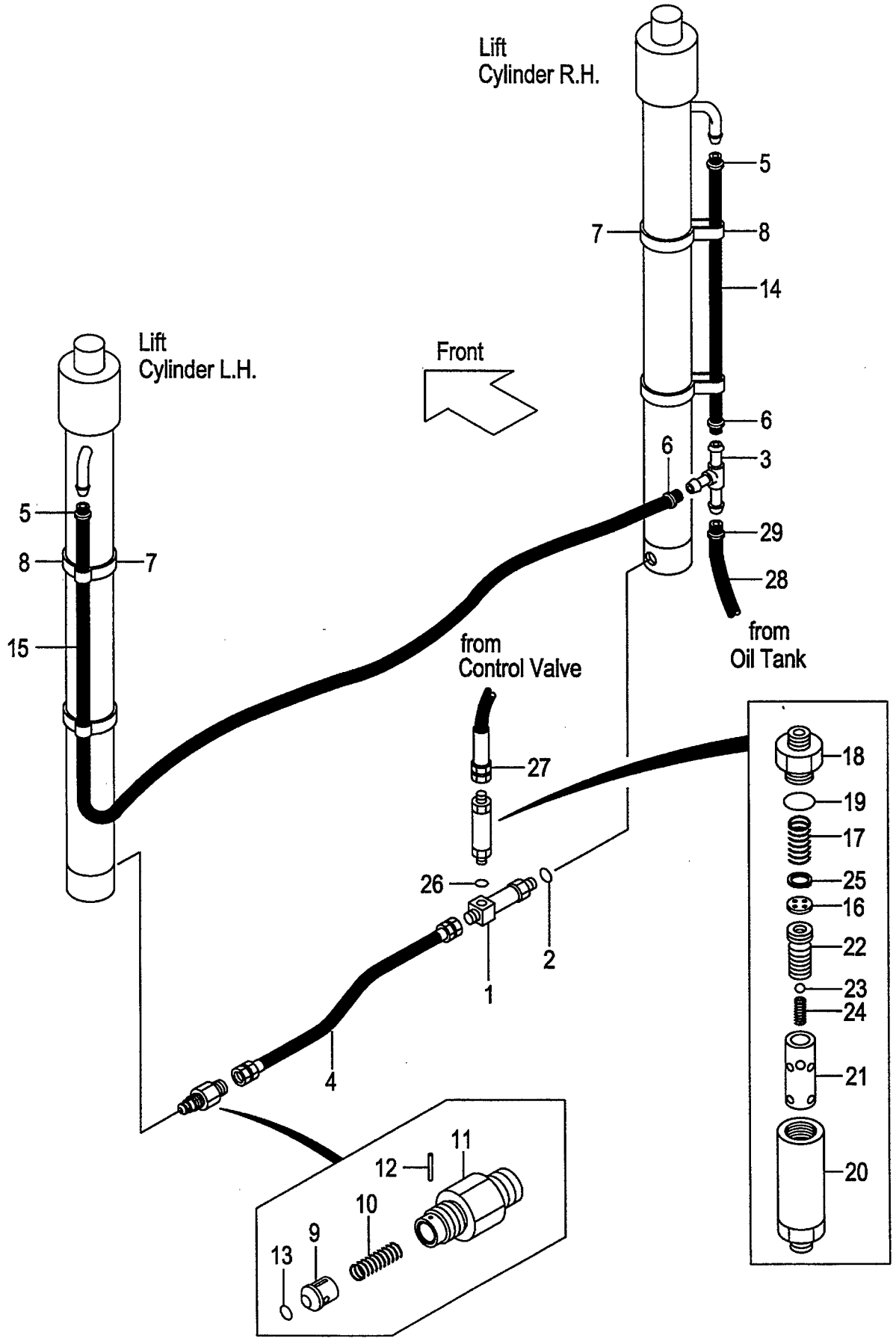

A:VM39F

Item No	Part No.	Mark	Description		Req'd	Remarks : Serial No.
-	04710-04270		HOSE VM600	ホース	1	[FC][RTL]
15	23678-40125		HOSE VM200	ホース	1	
-	23678-40145		HOSE VM225	ホース	1	
-	23678-40150		HOSE VM250	ホース	1	
-	23678-40160		HOSE VM270,VM275	ホース	1	(VM270,VM275)
-	23678-40170		HOSE VM300	ホース	1	
-	23678-40185		HOSE VM325	ホース	1	
-	23678-40190		HOSE VM330	ホース	1	
-	23678-40200		HOSE VM350	ホース	1	
-	23678-40210		HOSE VM366-375	ホース	1	
-	23678-40230		HOSE VM400	ホース	1	
-	23678-40240		HOSE VM425	ホース	1	
-	23678-40255		HOSE VM450	ホース	1	
-	23678-40265		HOSE VM475	ホース	1	
-	23678-40280		HOSE VM500	ホース	1	
-	23678-40310		HOSE VM550	ホース	1	
-	23678-40335		HOSE VM600	ホース	1	
-	04710-04125		HOSE VM200	ホース	1	[FC][RTL]
-	04710-04145		HOSE VM225	ホース	1	[FC][RTL]
-	04710-04150		HOSE VM250	ホース	1	[FC][RTL]
-	04710-04160		HOSE VM270,VM275	ホース	1	[FC][RTL]
-	04710-04170		HOSE VM300	ホース	1	[FC][RTL]
-	04710-04185		HOSE VM325	ホース	1	[FC][RTL]
-	04710-04190		HOSE VM330	ホース	1	[FC][RTL]
-	04710-04200		HOSE VM350	ホース	1	[FC][RTL]
-	04710-04210		HOSE VM366-375	ホース	1	[FC][RTL]
-	04710-04230		HOSE VM400	ホース	1	[FC][RTL]
-	04710-04240		HOSE VM425	ホース	1	[FC][RTL]
-	04710-04255		HOSE VM450	ホース	1	[FC][RTL]
-	04710-04265		HOSE VM475	ホース	1	[FC][RTL]
-	04710-04280		HOSE VM500	ホース	1	[FC][RTL]
-	04710-04310		HOSE VM550	ホース	1	[FC][RTL]
-	04710-04335		HOSE VM600	ホース	1	[FC][RTL]
A3	234F8-41001		REGULATOR-ASSY	レギュレータアッセン	1	INC.16-25
16	NO PART NO.	#	PLATE	プレート	1	
17	27979-43101		SPRING	スプリング	1	
18	NO PART NO.	#	NIPPLE	ニップル	1	
19	03320-00280		O-RING	Oリング	1	
20	NO PART NO.	#	CASE	ケース	1	
21	NO PART NO.	#	SLEEVE	スリーブ	1	
22	NO PART NO.	#	PISTON	ピストン	1	
23	24459-42951		BALL,NYLON	ボール	1	
24	214A8-44151		SPRING	スプリング	1	
25	02110-00018		RING,SNAP	スナップリング	1	
26	03320-00180		O-RING	Oリング	1	
27	234A8-02101		HOSE	ホース	1	
28	23678-40110		HOSE	ホース	1	
-	04710-04125		HOSE	ホース	1	[FC][RTL][CS35][FCS35] [CSA][FCS45][FCS55]

FIG.189 MAST PIPING [VM39F]

(M5028440) マストパイピング

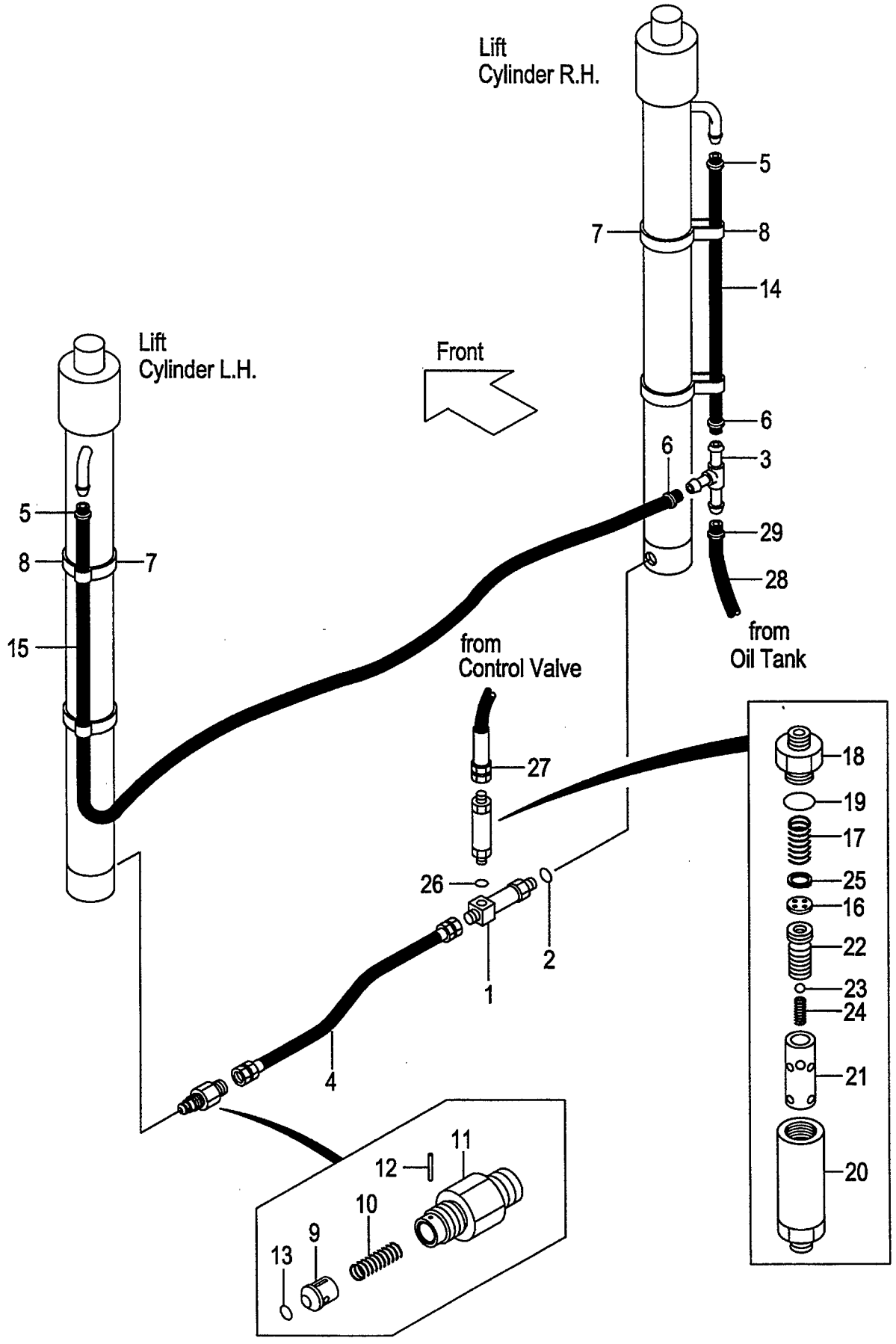

FIG.189
(M5028440)

A:VM39F

Item No	Part No.	Mark	Description	Req'd	Remarks : Serial No.
29	04911-00018		CLIP ｸﾘｯﾌﾟ	1	
-	04914-00016		CLIP ｸﾘｯﾌﾟ	1	
-	04911-00021		CLIP ｸﾘｯﾌﾟ	2	[FC][RTL][CS35][FCS35] [CSA][FCS45][FCS55]

FIG.190 FORK[VFM39F]

(M5028140) フォーク

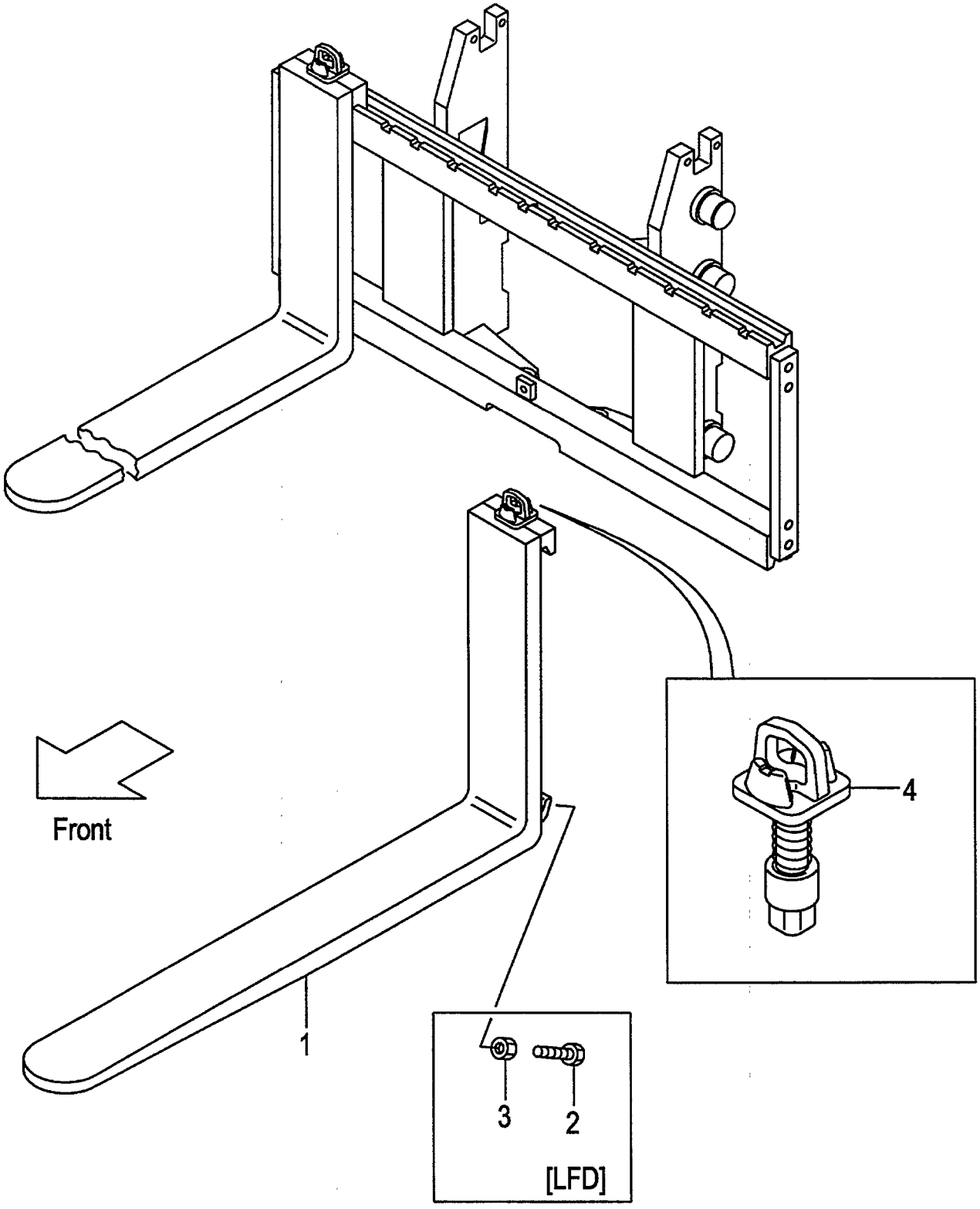

A:VFM39F

Item No	Part No.	Mark	Description		Req'd	Remarks : Serial No.
1	214J8-10501		FORK	ﾌｫｰｸ	2	(L=1070) INC.4
-	LB32M8-10011		FORK	ﾌｫｰｸ	2	(L=1100)(EU PRODUCT ONLY) INC.4
-	214J8-10581		FORK	ﾌｫｰｸ	2	[LF100] INC.4
-	214J8-10501		FORK	ﾌｫｰｸ	2	[LF107] INC.4
-	214J8-10591		FORK	ﾌｫｰｸ	2	[LF110] INC.4
-	214J8-10601		FORK	ﾌｫｰｸ	2	[LF120] INC.4
-	214J8-10511		FORK	ﾌｫｰｸ	2	[LF122] INC.4
-	214J8-10611		FORK	ﾌｫｰｸ	2	[LF130] INC.4
-	214J8-10521		FORK	ﾌｫｰｸ	2	[LF137] INC.4
-	214J8-10621		FORK	ﾌｫｰｸ	2	[LF140] INC.4
-	214J8-10631		FORK	ﾌｫｰｸ	2	[LF150] INC.4
-	214J8-10531		FORK	ﾌｫｰｸ	2	[LF152] INC.4
-	214J8-10641		FORK	ﾌｫｰｸ	2	[LF160] INC.4
-	214J8-10541		FORK	ﾌｫｰｸ	2	[LF167] INC.4
-	214J8-10651		FORK	ﾌｫｰｸ	2	[LF170] INC.4
-	214J8-10661		FORK	ﾌｫｰｸ	2	[LF180] INC.4
-	214J8-10551		FORK	ﾌｫｰｸ	2	[LF182] INC.4
-	214J8-10671		FORK	ﾌｫｰｸ	2	[LF190] INC.4
-	214J8-10561		FORK	ﾌｫｰｸ	2	[LF197] INC.4
-	214J8-10681		FORK	ﾌｫｰｸ	2	[LF200] INC.4
-	214J8-10571		FORK	ﾌｫｰｸ	2	[LF212] INC.4
-	234F8-10581		FORK	ﾌｫｰｸ	2	[LFD100] INC.4
-	234F8-10501		FORK	ﾌｫｰｸ	2	[LFD107] INC.4
-	234F8-10591		FORK	ﾌｫｰｸ	2	[LFD110] INC.4
-	234F8-10601		FORK	ﾌｫｰｸ	2	[LFD120] INC.4
-	234F8-10511		FORK	ﾌｫｰｸ	2	[LFD122] INC.4
-	234F8-10611		FORK	ﾌｫｰｸ	2	[LFD130] INC.4
-	234F8-10521		FORK	ﾌｫｰｸ	2	[LFD137] INC.4
-	234F8-10621		FORK	ﾌｫｰｸ	2	[LFD140] INC.4
-	234F8-10631		FORK	ﾌｫｰｸ	2	[LFD150] INC.4
-	234F8-10531		FORK	ﾌｫｰｸ	2	[LFD152] INC.4
-	234F8-10641		FORK	ﾌｫｰｸ	2	[LFD160] INC.4
-	234F8-10541		FORK	ﾌｫｰｸ	2	[LFD167] INC.4
-	234F8-10651		FORK	ﾌｫｰｸ	2	[LFD170] INC.4
-	234F8-10661		FORK	ﾌｫｰｸ	2	[LFD180] INC.4
-	234F8-10551		FORK	ﾌｫｰｸ	2	[LFD182] INC.4
-	234F8-10671		FORK	ﾌｫｰｸ	2	[LFD190] INC.4
-	234F8-10561		FORK	ﾌｫｰｸ	2	[LFD197] INC.4
-	234F8-10681		FORK	ﾌｫｰｸ	2	[LFD200] INC.4
-	234F8-10571		FORK	ﾌｫｰｸ	2	[LFD212] INC.4
2	234F8-12101		BOLT	ﾎﾞﾙﾄ	4	[LFD]
3	01402-00010		NUT	ﾅｯﾄ	4	[LFD]
4	214J8-11002		STOPPER,FORK	ｽﾄｯﾊﾟ	2	

FIG.191 LIFT BRACKET[VFM39F]

(M5020620) リフトブラケット

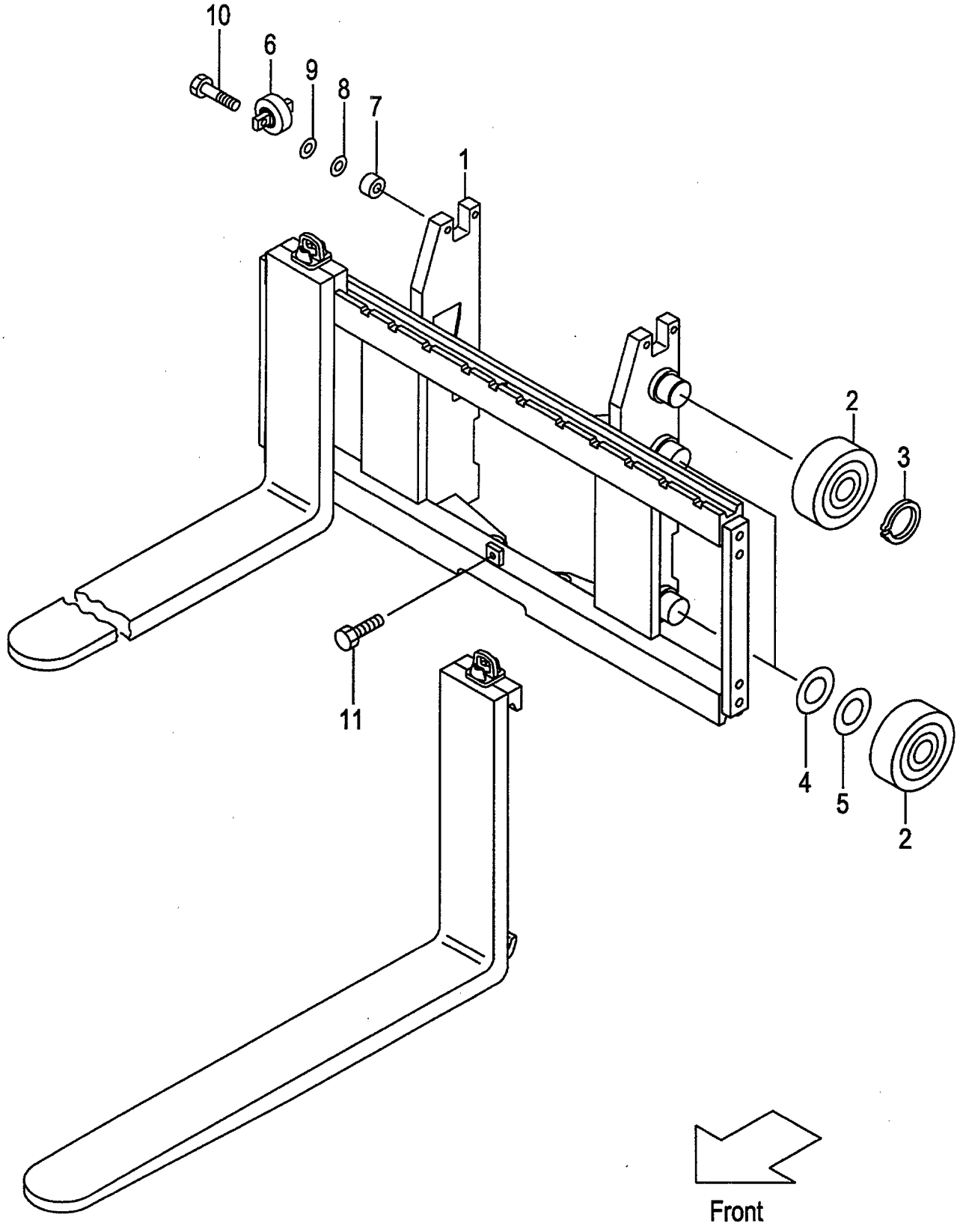

A:VFM39F

Item No	Part No.	Mark	Description		Req'd	Remarks : Serial No.
1	239F0-60001		BRACKET,LIFT	ﾌﾞﾗｹｯﾄ	1	
-	539F1-64101		BRACKET,LIFT	ﾌﾞﾗｹｯﾄ	1	[WFX110][WFX114][WFX127] [WFX135][WFX138]
-	539F1-64111		BRACKET,LIFT(L)	ﾌﾞﾗｹｯﾄ	1	[WFX135][WFX138][WFX145] [WFX146][WFX154][WFX180]
2	277P8-22051		ROLLER,END	ﾛｰﾗ	6	
-	277P8-22061		ROLLER,END	ﾛｰﾗ	(6)	
-	577P3-74001		ROLLER,END	ﾛｰﾗ	6	[FC][CS35][FCS35][FCS45] [FCS55]
-	577P3-74011		ROLLER,END	ﾛｰﾗ	(6)	[FC][CS35][FCS35][FCS45] [FCS55]
3	02100-00045		RING,SNAP	ｽﾅｯﾌﾟﾘﾝｸﾞ	2	
4	277P8-22071		SHIM,T-0.5	ｼﾑ	5	
5	277P8-22081		SHIM,T-1.0	ｼﾑ	5	
6	23458-32052		ROLLER,SIDE	ﾛｰﾗ	2	
-	514A3-71702		ROLLER,SIDE	ﾛｰﾗ	2	[FC][CS35][FCS35][FCS45] [FCS55]
7	22548-34031		SPACER	ｽﾍﾟｰｻ	4	
8	22548-34051		SHIM	ｼﾑ	5	
9	22548-34061		SHIM	ｼﾑ	5	
10	01184-12050		BOLT & WASHER	ﾎﾞﾙﾄ&ﾜｯｼｬ	4	
-	01184-12040		BOLT & WASHER	ﾎﾞﾙﾄ&ﾜｯｼｬ	4	[FC][CS35][FCS35][FCS45] [FCS55]
11	01184-12025		BOLT & WASHER	ﾎﾞﾙﾄ&ﾜｯｼｬ	1	

FIG.192 BACKREST[VFM39F]

(M5028260) ﾊﾞｯｸﾚｽﾄ

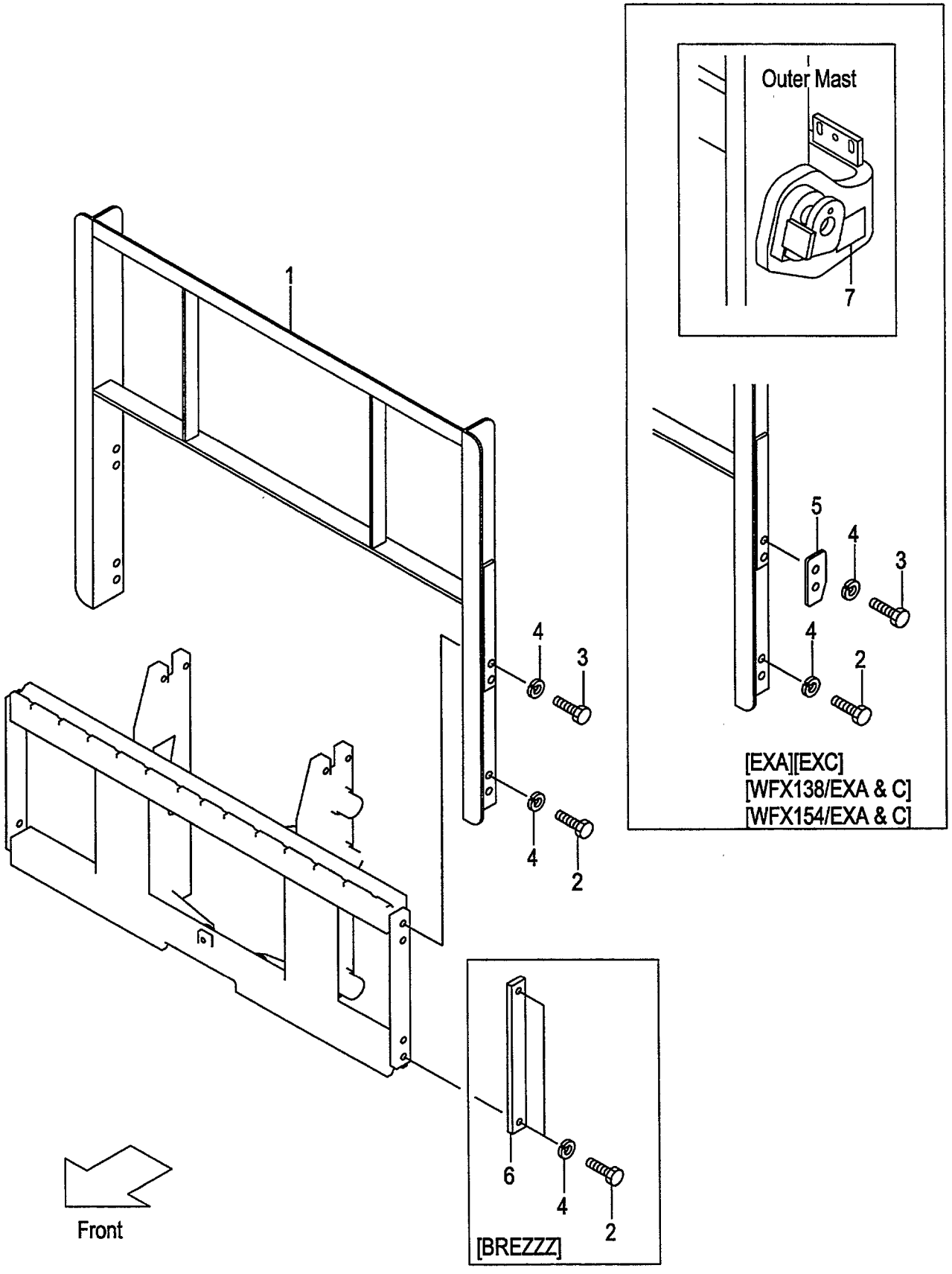

A:VFM39F

Item No	Part No.	Mark	Description		Req'd	Remarks : Serial No.
1	234F8-22201		BACKREST	ﾊﾞｯｸﾚｽﾄ	1	(WITHOUT BREZZZ)
-	534F2-74001		BACKREST	ﾊﾞｯｸﾚｽﾄ	1	[EXA][EXC]
-	234F8-22101		BACKREST	ﾊﾞｯｸﾚｽﾄ	1	[HBR130]
-	234F8-22111		BACKREST	ﾊﾞｯｸﾚｽﾄ	1	[HBR140]
-	234F8-22121		BACKREST	ﾊﾞｯｸﾚｽﾄ	1	[HBR150]
-	534F1-64401		BACKREST	ﾊﾞｯｸﾚｽﾄ	1	[WFX138][WFX138/EXA]
-	534F1-64411		BACKREST	ﾊﾞｯｸﾚｽﾄ	1	[WFX154][WFX154/EXA]
2	01100-14025		BOLT	ﾎﾞﾙﾄ	4	
-	01100-14030		BOLT	ﾎﾞﾙﾄ	4	[HBR]
-	01100-14025		BOLT	ﾎﾞﾙﾄ	4	[BREZZZ]
3	01100-14030		BOLT	ﾎﾞﾙﾄ	2	(WITHOUT BREZZZ)
-	01100-14035		BOLT	ﾎﾞﾙﾄ	4	[EXA][EXC][WFX138/EXA&C] [WFX154/EXA&C]
-	01100-14030		BOLT	ﾎﾞﾙﾄ	4	[HBR]
4	02010-00014		WASHER	ﾜｯｼｬ	8	
-	02010-00014		WASHER	ﾜｯｼｬ	4	[BREZZZ]
5	534A2-74051		PLATE	ﾌﾟﾚｰﾄ	2	[EXA][EXC][WFX138/EXA&C] [WFX154/EXA&C]
6	24450-92021		PLATE	ﾌﾟﾚｰﾄ	2	[BREZZZ]
7	534A2-74301		DECAL,CAUTION	ﾃﾞｶﾙ	1	[EXA][EXC][WFX138/EXA&C] [WFX154/EXA&C]

FIG.193 MAST[VFM39F]

(M5020430) マスト

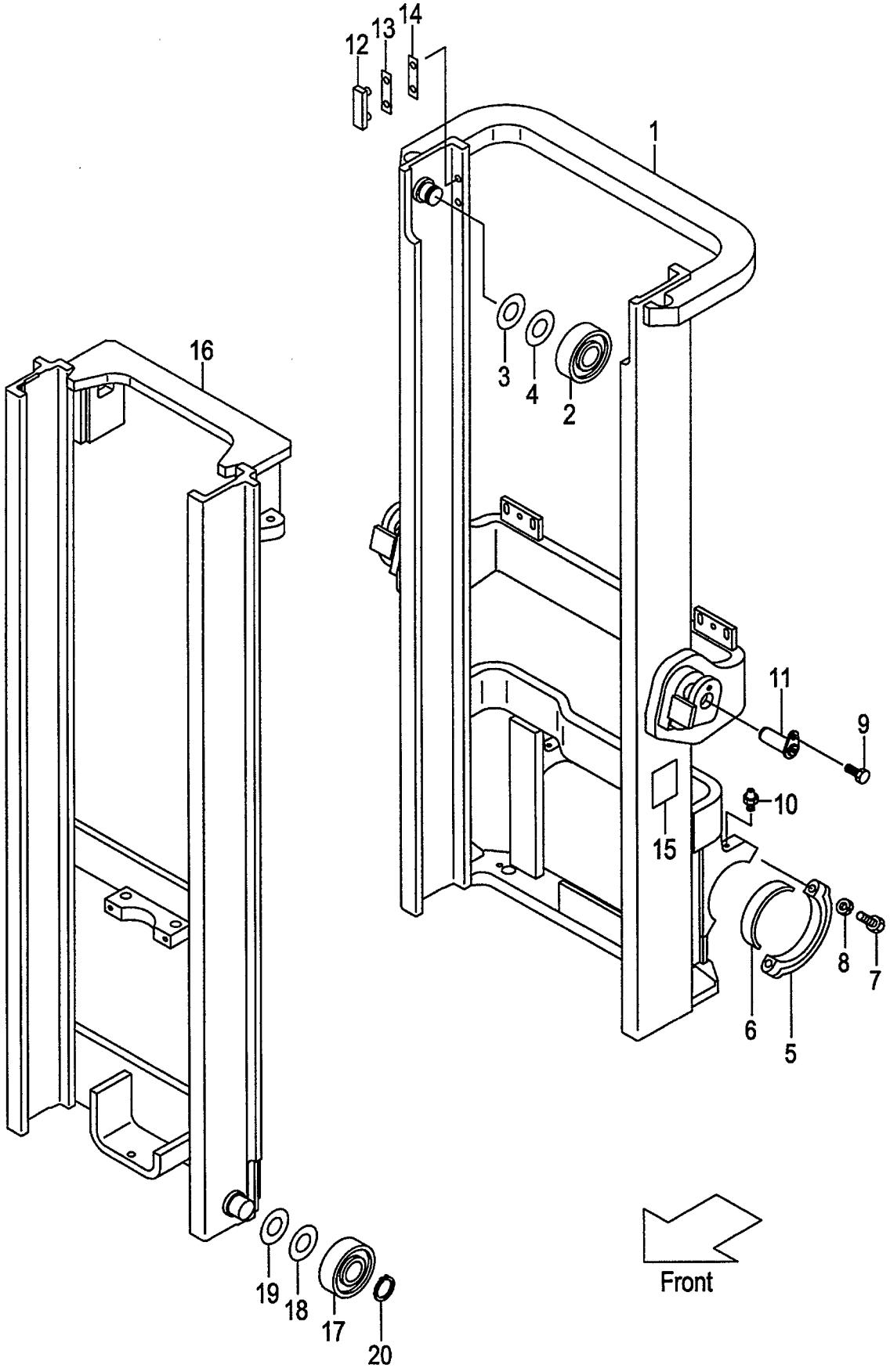

A:VFM39F

Item No	Part No.	Mark	Description		Req'd	Remarks : Serial No.
1	239F0-40111		MAST,OUTER VFM200	ｱｳﾀﾏｽﾄ	1	
-	239F0-40121		MAST,OUTER VFM225	ｱｳﾀﾏｽﾄ	1	
-	239F0-40131		MAST,OUTER VFM250	ｱｳﾀﾏｽﾄ	1	
-	239F0-40141		MAST,OUTER VFM270	ｱｳﾀﾏｽﾄ	1	
-	239F0-40151		MAST,OUTER VFM275	ｱｳﾀﾏｽﾄ	1	
-	239F0-40101		MAST,OUTER VFM300	ｱｳﾀﾏｽﾄ	1	
-	239F0-40161		MAST,OUTER VFM325	ｱｳﾀﾏｽﾄ	1	
-	239F0-40171		MAST,OUTER VFM330	ｱｳﾀﾏｽﾄ	1	
-	239F0-40181		MAST,OUTER VFM350	ｱｳﾀﾏｽﾄ	1	
-	239F0-40191		MAST,OUTER VFM366	ｱｳﾀﾏｽﾄ	1	
-	239F0-40201		MAST,OUTER VFM370	ｱｳﾀﾏｽﾄ	1	
-	239F0-40211		MAST,OUTER VFM375	ｱｳﾀﾏｽﾄ	1	
-	239F0-40221		MAST,OUTER VFM400	ｱｳﾀﾏｽﾄ	1	
-	239F0-40231		MAST,OUTER VFM425	ｱｳﾀﾏｽﾄ	1	
-	239F0-40241		MAST,OUTER VFM450	ｱｳﾀﾏｽﾄ	1	
-	239F0-40251		MAST,OUTER VFM475	ｱｳﾀﾏｽﾄ	1	
-	239F0-40261		MAST,OUTER VFM500	ｱｳﾀﾏｽﾄ	1	
-	239F0-40271		MAST,OUTER VFM550	ｱｳﾀﾏｽﾄ	1	
-	239F0-40281		MAST,OUTER VFM600	ｱｳﾀﾏｽﾄ	1	
-	539F3-91211		MAST,OUTER VFM200	ｱｳﾀﾏｽﾄ	1	[EXR][RW][HC]
-	539F3-91221		MAST,OUTER VFM225	ｱｳﾀﾏｽﾄ	1	[EXR][RW][HC]
-	539F3-91231		MAST,OUTER VFM250	ｱｳﾀﾏｽﾄ	1	[EXR][RW][HC]
-	539F3-91241		MAST,OUTER VFM270	ｱｳﾀﾏｽﾄ	1	[EXR][RW][HC]
-	539F3-91251		MAST,OUTER VFM275	ｱｳﾀﾏｽﾄ	1	[EXR][RW][HC]
-	539F3-91201		MAST,OUTER VFM300	ｱｳﾀﾏｽﾄ	1	[EXR][RW][HC]
-	539F3-91261		MAST,OUTER VFM325	ｱｳﾀﾏｽﾄ	1	[EXR][RW][HC]
-	539F3-91271		MAST,OUTER VFM330	ｱｳﾀﾏｽﾄ	1	[EXR][RW][HC]
-	539F3-91281		MAST,OUTER VFM350	ｱｳﾀﾏｽﾄ	1	[EXR][RW][HC]
-	539F3-91291		MAST,OUTER VFM366	ｱｳﾀﾏｽﾄ	1	[EXR][RW][HC]
-	539F3-91301		MAST,OUTER VFM370	ｱｳﾀﾏｽﾄ	1	[EXR][RW][HC]
-	539F3-91311		MAST,OUTER VFM375	ｱｳﾀﾏｽﾄ	1	[EXR][RW][HC]
-	539F3-91321		MAST,OUTER VFM400	ｱｳﾀﾏｽﾄ	1	[EXR][RW][HC]
-	539F3-91331		MAST,OUTER VFM425	ｱｳﾀﾏｽﾄ	1	[EXR][RW][HC]
-	539F3-91341		MAST,OUTER VFM450	ｱｳﾀﾏｽﾄ	1	[EXR][RW][HC]
-	539F3-91351		MAST,OUTER VFM475	ｱｳﾀﾏｽﾄ	1	[EXR][RW][HC]
-	539F3-91361		MAST,OUTER VFM500	ｱｳﾀﾏｽﾄ	1	[EXR][RW][HC]
-	539F3-91371		MAST,OUTER VFM550	ｱｳﾀﾏｽﾄ	1	[EXR][RW][HC]
-	539F3-91381		MAST,OUTER VFM600	ｱｳﾀﾏｽﾄ	1	[EXR][RW][HC]
2	277P8-22051		ROLLER,END	ﾛｰﾗ	2	
-	577P3-74001		ROLLER,END	ﾛｰﾗ	2	[FC][CS35][FCS35][FCS45] [FCS55]
3	277P8-22071		SHIM,T-0.5	ｼﾑ	12	
4	277P8-22081		SHIM,T-1.0	ｼﾑ	12	
5	277P8-32701		CAP,MAST-SUPPORT	ｷｬｯﾌﾟ	2	
-	22018-30064		CAP,MAST-SUPPORT	ｷｬｯﾌﾟ	2	(EU PRODUCT ONLY)
6	214A8-02201		BUSHING	ﾌﾞｯｼﾝｸﾞ	2	
7	01103-16065		BOLT	ﾎﾞﾙﾄ	4	
8	02011-00016		WASHER	ﾜｯｼｬ	4	
9	216G8-52301		BOLT & WASHER	ﾎﾞﾙﾄ&ﾜｯｼｬ	2	
-	01184-10020		BOLT & WASHER	ﾎﾞﾙﾄ&ﾜｯｼｬ	2	(EU PRODUCT ONLY)

FIG.193 MAST[VFM39F]

(M5020430) マスト

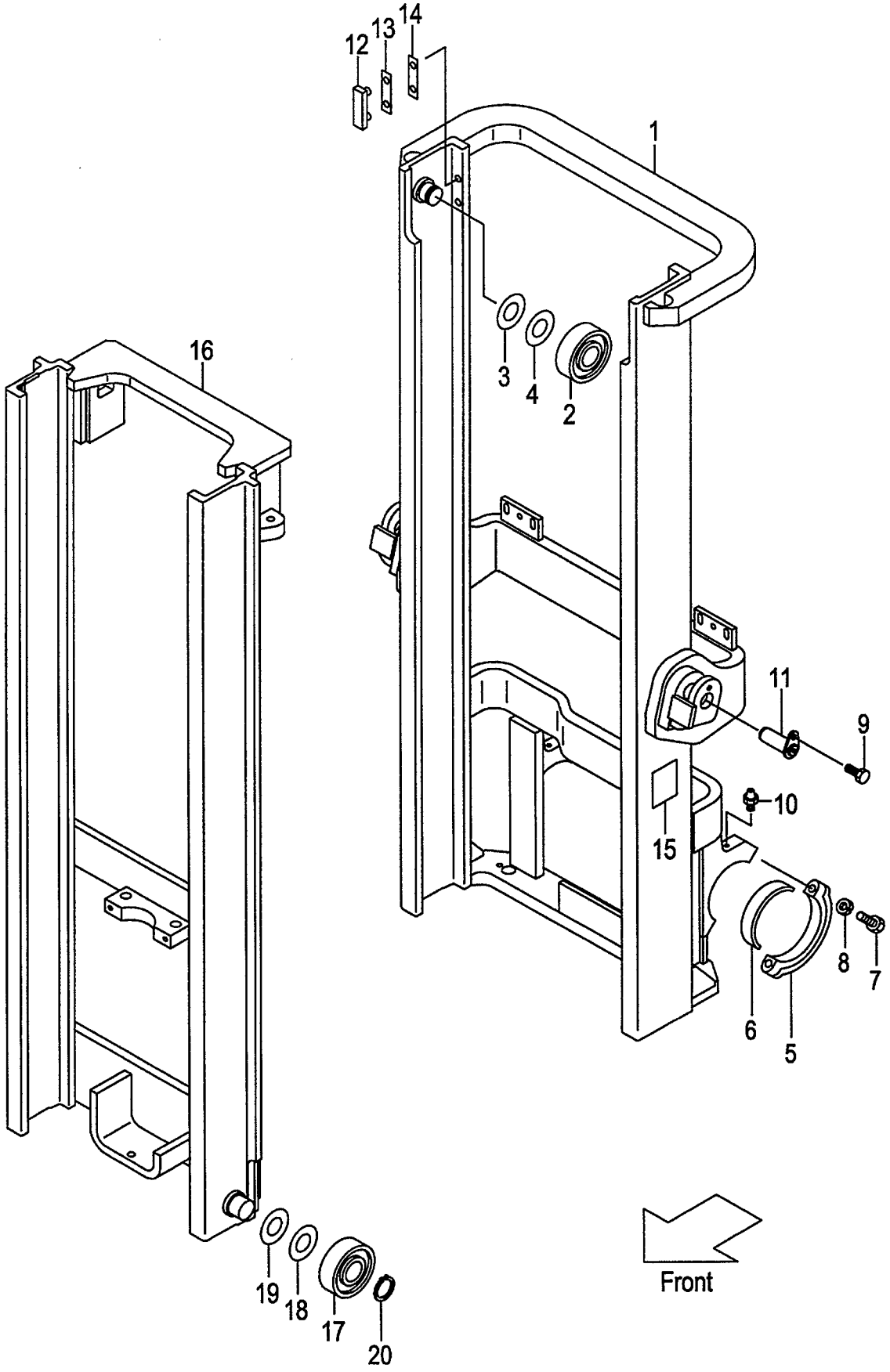

A:VFM39F

Item No	Part No.	Mark	Description		Req'd	Remarks : Serial No.
10	04901-00100		FITTING	ﾌｨｯﾃｨﾝｸﾞ	2	
11	272K8-52201		PIN	ﾋﾟﾝ	2	
-	234A8-02001		PIN	ﾋﾟﾝ	2	(EU PRODUCT ONLY)
12	216G8-33401		SLIPPER	ｽﾘｯﾊﾟ	2	
13	216G8-33361		SHIM,T-0.5	ｼﾑ	8	
14	216G8-33371		SHIM,T-1.0	ｼﾑ	4	
15	23678-06002		PLATE,NAME	ﾌﾟﾚｰﾄ	1	
16	277W0-40312		MAST,INNER VFM200	ｲﾝﾅﾏｽﾄ	1	
-	277W0-40322		MAST,INNER VFM225	ｲﾝﾅﾏｽﾄ	1	
-	277W0-40332		MAST,INNER VFM250	ｲﾝﾅﾏｽﾄ	1	
-	277W0-40342		MAST,INNER VFM270	ｲﾝﾅﾏｽﾄ	1	
-	277W0-40352		MAST,INNER VFM275	ｲﾝﾅﾏｽﾄ	1	
-	277W0-40302		MAST,INNER VFM300	ｲﾝﾅﾏｽﾄ	1	
-	277W0-40362		MAST,INNER VFM325	ｲﾝﾅﾏｽﾄ	1	
-	277W0-40372		MAST,INNER VFM330	ｲﾝﾅﾏｽﾄ	1	
-	277W0-40382		MAST,INNER VFM350	ｲﾝﾅﾏｽﾄ	1	
-	277W0-40392		MAST,INNER VFM366	ｲﾝﾅﾏｽﾄ	1	
-	277W0-40402		MAST,INNER VFM370	ｲﾝﾅﾏｽﾄ	1	
-	277W0-40412		MAST,INNER VFM375	ｲﾝﾅﾏｽﾄ	1	
-	277W0-40422		MAST,INNER VFM400	ｲﾝﾅﾏｽﾄ	1	
-	277W0-40432		MAST,INNER VFM425	ｲﾝﾅﾏｽﾄ	1	
-	277W0-40442		MAST,INNER VFM450	ｲﾝﾅﾏｽﾄ	1	
-	277W0-40452		MAST,INNER VFM475	ｲﾝﾅﾏｽﾄ	1	
-	277W0-40462		MAST,INNER VFM500	ｲﾝﾅﾏｽﾄ	1	
-	277W0-40472		MAST,INNER VFM550	ｲﾝﾅﾏｽﾄ	1	
-	277W0-40482		MAST,INNER VFM600	ｲﾝﾅﾏｽﾄ	1	
17	277P8-22051		ROLLER,END	ﾛｰﾗ	2	
-	277P8-22061		ROLLER,END	ﾛｰﾗ	(2)	
-	577P3-74001		ROLLER,END	ﾛｰﾗ	2	[FC][CS35][FCS35][FCS45] [FCS55]
-	577P3-74011		ROLLER,END	ﾛｰﾗ	(2)	[FC][CS35][FCS35][FCS45] [FCS55]
18	277P8-22071		SHIM,T-0.5	ｼﾑ	12	
-	277P8-22071		SHIM,T-0.5	ｼﾑ	10	[FC][CS35][FCS35][FCS45] [FCS55]
19	277P8-22081		SHIM,T-1.0	ｼﾑ	12	
-	277P8-22081		SHIM,T-1.0	ｼﾑ	10	[FC][CS35][FCS35][FCS45] [FCS55]
20	09192-30044		RING,SNAP	ｽﾅｯﾌﾟﾘﾝｸﾞ	2	

FIG.194 TILT GAUGE[VFM39F/(TG,PPC,PR,PRC,MPC)]

(M5020440) ﾃｨﾙﾄｹﾞｰｼﾞ

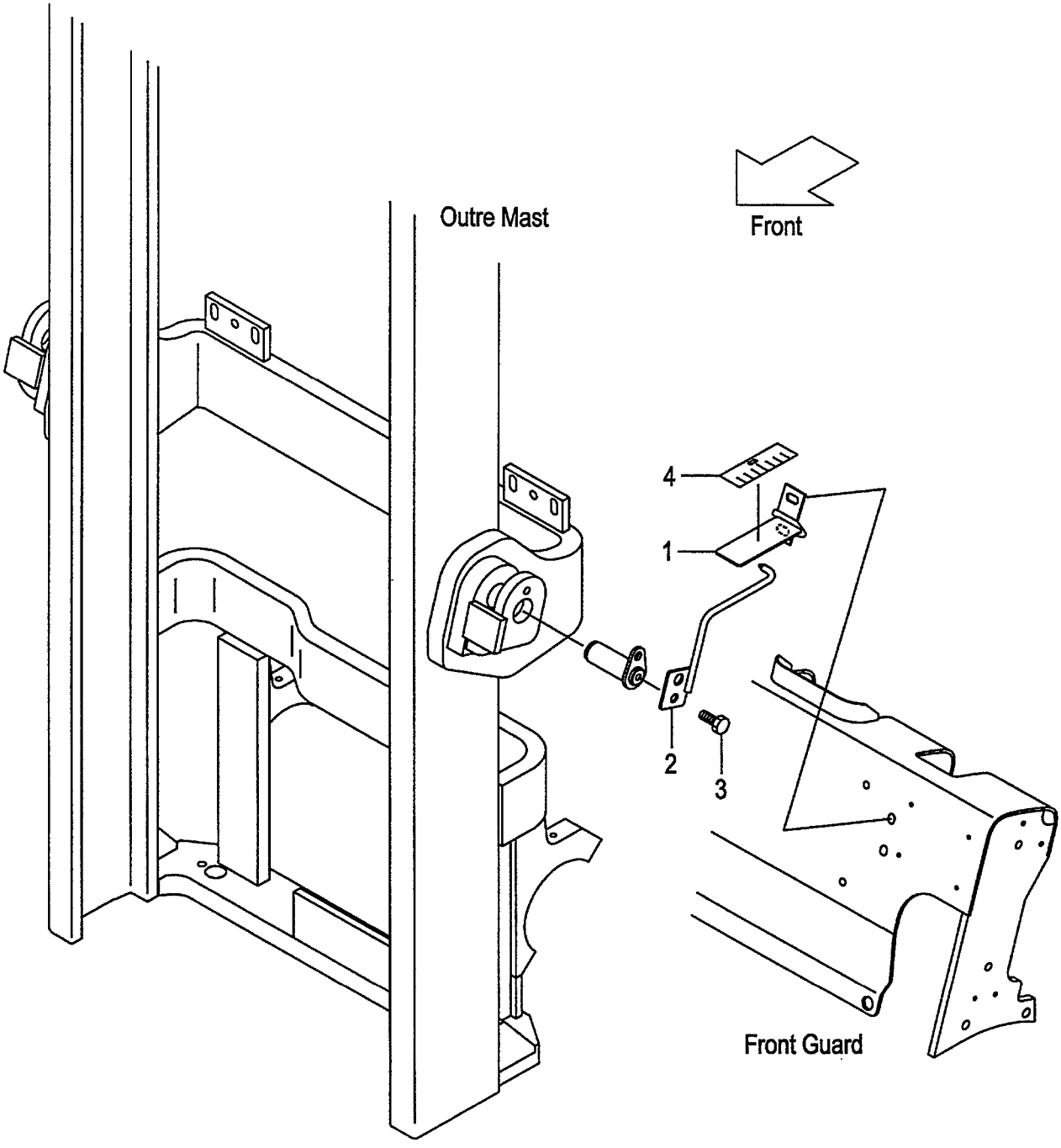

A:VFM39F

Item No	Part No.	Mark	Description		Req'd	Remarks : Serial No.
1	639A0-10011		GAUGE,TILT	ｹﾞｰｼﾞ	1	TG,PPC,PR,PRC,MPC (VFM250-600)
2	639A0-10051		INDICATOR	ｲﾝｼﾞｹｰﾀ	1	TG,PPC,PR,PRC,MPC (VFM250-600)
3	216G4-12251		BOLT	ﾎﾞﾙﾄ	1	TG,PPC,PR,PRC,MPC (VFM250-600)
4	62459-23371		SEAL,GAUGE	ｼｰﾙ	1	TG,PPC,PR,PRC,MPC (VFM250-600)

FIG.195 LIFT CYLINDER(FRONT)[VFM39F]

(M5020540) リフトシリンダ(フロント)

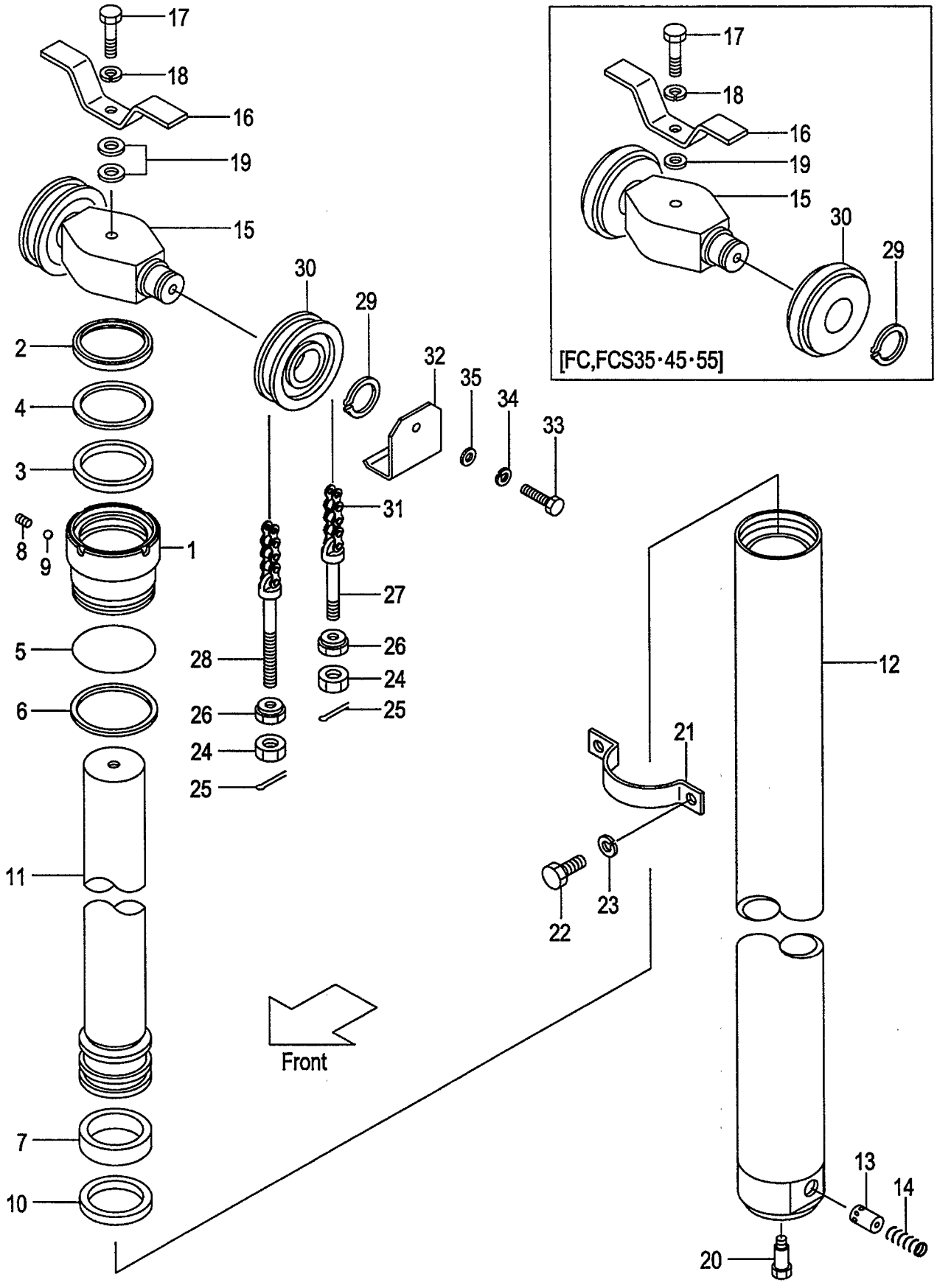

A:VFM39F

Item No	Part No.	Mark	Description	Req'd	Remarks : Serial No.
A1	277T0-50111		CYL-ASSY,LIFT VFM200 ﾘﾌﾄｼﾘﾝﾀﾞｱｯｾﾝ	1	INC.1-14
-	277T0-50121		CYL-ASSY,LIFT VFM225 ﾘﾌﾄｼﾘﾝﾀﾞｱｯｾﾝ	1	INC.1-14
-	277T0-50131		CYL-ASSY,LIFT VFM250 ﾘﾌﾄｼﾘﾝﾀﾞｱｯｾﾝ	1	INC.1-14
-	277T0-50141		CYL-ASSY,LIFT VFM270 ﾘﾌﾄｼﾘﾝﾀﾞｱｯｾﾝ	1	INC.1-14
-	277T0-50151		CYL-ASSY,LIFT VFM275 ﾘﾌﾄｼﾘﾝﾀﾞｱｯｾﾝ	1	INC.1-14
-	277T0-50101		CYL-ASSY,LIFT VFM300 ﾘﾌﾄｼﾘﾝﾀﾞｱｯｾﾝ	1	INC.1-14
-	277T0-50161		CYL-ASSY,LIFT VFM325 ﾘﾌﾄｼﾘﾝﾀﾞｱｯｾﾝ	1	INC.1-14
-	277T0-50171		CYL-ASSY,LIFT VFM330 ﾘﾌﾄｼﾘﾝﾀﾞｱｯｾﾝ	1	INC.1-14
-	277T0-50181		CYL-ASSY,LIFT VFM350 ﾘﾌﾄｼﾘﾝﾀﾞｱｯｾﾝ	1	INC.1-14
-	277T0-50191		CYL-ASSY,LIFT VFM366 ﾘﾌﾄｼﾘﾝﾀﾞｱｯｾﾝ	1	INC.1-14
-	277T0-50201		CYL-ASSY,LIFT VFM370 ﾘﾌﾄｼﾘﾝﾀﾞｱｯｾﾝ	1	INC.1-14
-	277T0-50211		CYL-ASSY,LIFT VFM375 ﾘﾌﾄｼﾘﾝﾀﾞｱｯｾﾝ	1	INC.1-14
-	277T0-50221		CYL-ASSY,LIFT VFM400 ﾘﾌﾄｼﾘﾝﾀﾞｱｯｾﾝ	1	INC.1-14
-	277T0-50231		CYL-ASSY,LIFT VFM425 ﾘﾌﾄｼﾘﾝﾀﾞｱｯｾﾝ	1	INC.1-14
-	277T0-50241		CYL-ASSY,LIFT VFM450 ﾘﾌﾄｼﾘﾝﾀﾞｱｯｾﾝ	1	INC.1-14
-	277T0-50251		CYL-ASSY,LIFT VFM475 ﾘﾌﾄｼﾘﾝﾀﾞｱｯｾﾝ	1	INC.1-14
-	277T0-50261		CYL-ASSY,LIFT VFM500 ﾘﾌﾄｼﾘﾝﾀﾞｱｯｾﾝ	1	INC.1-14
-	277T0-50271		CYL-ASSY,LIFT VFM550 ﾘﾌﾄｼﾘﾝﾀﾞｱｯｾﾝ	1	INC.1-14
-	277T0-50281		CYL-ASSY,LIFT VFM600 ﾘﾌﾄｼﾘﾝﾀﾞｱｯｾﾝ	1	INC.1-14
1	277T0-52401		CAP ｷｬｯﾌﾟ	1	
2	24469-42721	*	SEAL,DUST ｼｰﾙ	1	
3	24450-82241	*	PACKING ﾊﾟｯｷﾝｸﾞ	1	
4	24450-82251	*	RING,BACK-UP ﾘﾝｸﾞ	1	
5	03350-00950	*	O-RING Oﾘﾝｸﾞ	1	
6	277T0-52411	*	RING ﾘﾝｸﾞ	1	
7	23918-52131	*	WEARING ｳｴｱﾘﾝｸﾞ	1	
8	234A0-52611		PLUG ﾌﾟﾗｸﾞ	1	
9	03190-00006		BALL ﾎﾞｰﾙ	1	
10	54458-42011	*	RING,PISTON ﾘﾝｸﾞ	1	
11	277T0-50511		ROD,PISTON VFM200 ﾛｯﾄﾞ	1	
-	277T0-50521		ROD,PISTON VFM225 ﾛｯﾄﾞ	1	
-	277T0-50531		ROD,PISTON VFM250 ﾛｯﾄﾞ	1	
-	277T0-50541		ROD,PISTON VFM270 ﾛｯﾄﾞ	1	
-	277T0-50551		ROD,PISTON VFM275 ﾛｯﾄﾞ	1	
-	277T0-50501		ROD,PISTON VFM300 ﾛｯﾄﾞ	1	
-	277T0-50561		ROD,PISTON VFM325 ﾛｯﾄﾞ	1	
-	277T0-50571		ROD,PISTON VFM330 ﾛｯﾄﾞ	1	
-	277T0-50581		ROD,PISTON VFM350 ﾛｯﾄﾞ	1	
-	277T0-50591		ROD,PISTON VFM366 ﾛｯﾄﾞ	1	
-	277T0-50601		ROD,PISTON VFM370 ﾛｯﾄﾞ	1	
-	277T0-50611		ROD,PISTON VFM375 ﾛｯﾄﾞ	1	
-	277T0-50621		ROD,PISTON VFM400 ﾛｯﾄﾞ	1	
-	277T0-50631		ROD,PISTON VFM425 ﾛｯﾄﾞ	1	
-	277T0-50641		ROD,PISTON VFM450 ﾛｯﾄﾞ	1	
-	277T0-50651		ROD,PISTON VFM475 ﾛｯﾄﾞ	1	
-	277T0-50661		ROD,PISTON VFM500 ﾛｯﾄﾞ	1	
-	277T0-50671		ROD,PISTON VFM550 ﾛｯﾄﾞ	1	
-	277T0-50681		ROD,PISTON VFM600 ﾛｯﾄﾞ	1	

FIG.195 LIFT CYLINDER(FRONT)[VFM39F]

(M5020540) リフトシリンダ(フロント)

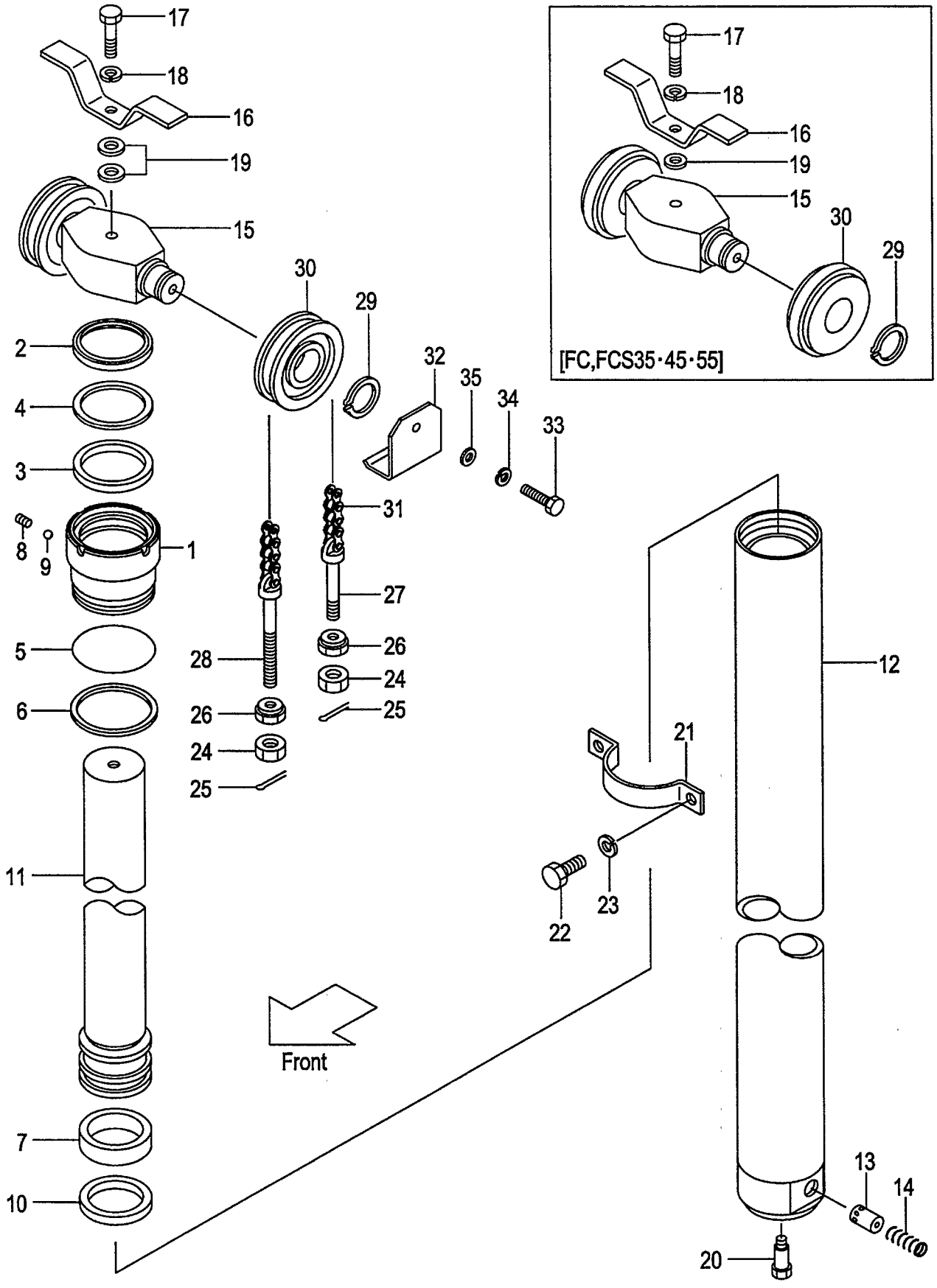

A:VFM39F

Item No	Part No.	Mark	Description		Req'd	Remarks : Serial No.
12	277T0-50311		BODY,CYL VFM200	ﾎﾞﾃﾞｨ	1	
-	277T0-50321		BODY,CYL VFM225	ﾎﾞﾃﾞｨ	1	
-	277T0-50331		BODY,CYL VFM250	ﾎﾞﾃﾞｨ	1	
-	277T0-50341		BODY,CYL VFM270	ﾎﾞﾃﾞｨ	1	
-	277T0-50351		BODY,CYL VFM275	ﾎﾞﾃﾞｨ	1	
-	277T0-50301		BODY,CYL VFM300	ﾎﾞﾃﾞｨ	1	
-	277T0-50361		BODY,CYL VFM325	ﾎﾞﾃﾞｨ	1	
-	277T0-50371		BODY,CYL VFM330	ﾎﾞﾃﾞｨ	1	
-	277T0-50381		BODY,CYL VFM350	ﾎﾞﾃﾞｨ	1	
-	277T0-50391		BODY,CYL VFM366	ﾎﾞﾃﾞｨ	1	
-	277T0-50401		BODY,CYL VFM370	ﾎﾞﾃﾞｨ	1	
-	277T0-50411		BODY,CYL VFM375	ﾎﾞﾃﾞｨ	1	
-	277T0-50421		BODY,CYL VFM400	ﾎﾞﾃﾞｨ	1	
-	277T0-50431		BODY,CYL VFM425	ﾎﾞﾃﾞｨ	1	
-	277T0-50441		BODY,CYL VFM450	ﾎﾞﾃﾞｨ	1	
-	277T0-50451		BODY,CYL VFM475	ﾎﾞﾃﾞｨ	1	
-	277T0-50461		BODY,CYL VFM500	ﾎﾞﾃﾞｨ	1	
-	277T0-50471		BODY,CYL VFM550	ﾎﾞﾃﾞｨ	1	
-	277T0-50481		BODY,CYL VFM600	ﾎﾞﾃﾞｨ	1	
13	229L0-82551		PISTON	ﾋﾟｽﾄﾝ	1	
14	24389-46021		SPRING	ｽﾌﾟﾘﾝｸﾞ	1	
15	277P0-82501		HEAD,PISTON	ﾍｯﾄﾞ	1	
16	214A0-82681		STOPPER,CHAIN	ｽﾄｯﾊﾟ	1	
17	01100-16075		BOLT	ﾎﾞﾙﾄ	1	
18	02010-00016		WASHER	ﾜｯｼｬ	1	
19	02000-00016		WASHER	ﾜｯｼｬ	2	
-	02000-20016		WASHER	ﾜｯｼｬ	1	[FC][FCS35][FCS45][FCS55]
20	214A0-82831		BOLT	ﾎﾞﾙﾄ	1	
21	214J0-82411		SUPPORT	ｻﾎﾟｰﾄ	1	
22	01103-10020		BOLT	ﾎﾞﾙﾄ	2	
23	02011-00010		WASHER	ﾜｯｼｬ	2	
24	01400-00018		NUT	ﾅｯﾄ	4	
25	02200-03030		PIN	ﾋﾟﾝ	4	
26	22218-40191		NUT	ﾅｯﾄ	4	
27	24459-42381		PIN,ANCHOR	ﾋﾟﾝ	2	
-	22218-42111		PIN,ANCHOR	ﾋﾟﾝ	2	[FC][FCS35][FCS45][FCS55]
28	24459-42391		PIN,ANCHOR	ﾋﾟﾝ	2	
-	231A0-82001		PIN,ANCHOR	ﾋﾟﾝ	2	[FC][FCS35][FCS45][FCS55]
29	02100-00040		RING,SNAP	ｽﾅｯﾌﾟﾘﾝｸﾞ	2	
30	234A8-43501		SHEAVE	ｼｰﾌﾞ	2	
-	22208-40031		SHEAVE	ｼｰﾌﾞ	2	[FC][FCS35][FCS45][FCS55]
31	22438-45451		CHAIN VFM200	ﾁｪｰﾝ	2	
-	22438-45511		CHAIN VFM225	ﾁｪｰﾝ	2	
-	22438-45531		CHAIN VFM250	ﾁｪｰﾝ	2	
-	22438-45571		CHAIN VFM270	ﾁｪｰﾝ	2	
-	22438-45591		CHAIN VFM275	ﾁｪｰﾝ	2	
-	22438-45611		CHAIN VFM300	ﾁｪｰﾝ	2	
-	22438-45651		CHAIN VFM325	ﾁｪｰﾝ	2	
-	22438-45671		CHAIN VFM330	ﾁｪｰﾝ	2	
-	22438-45711		CHAIN VFM350	ﾁｪｰﾝ	2	

FIG.195 LIFT CYLINDER(FRONT)[VFM39F]

(M5020540) リフトシリンダ(フロント)

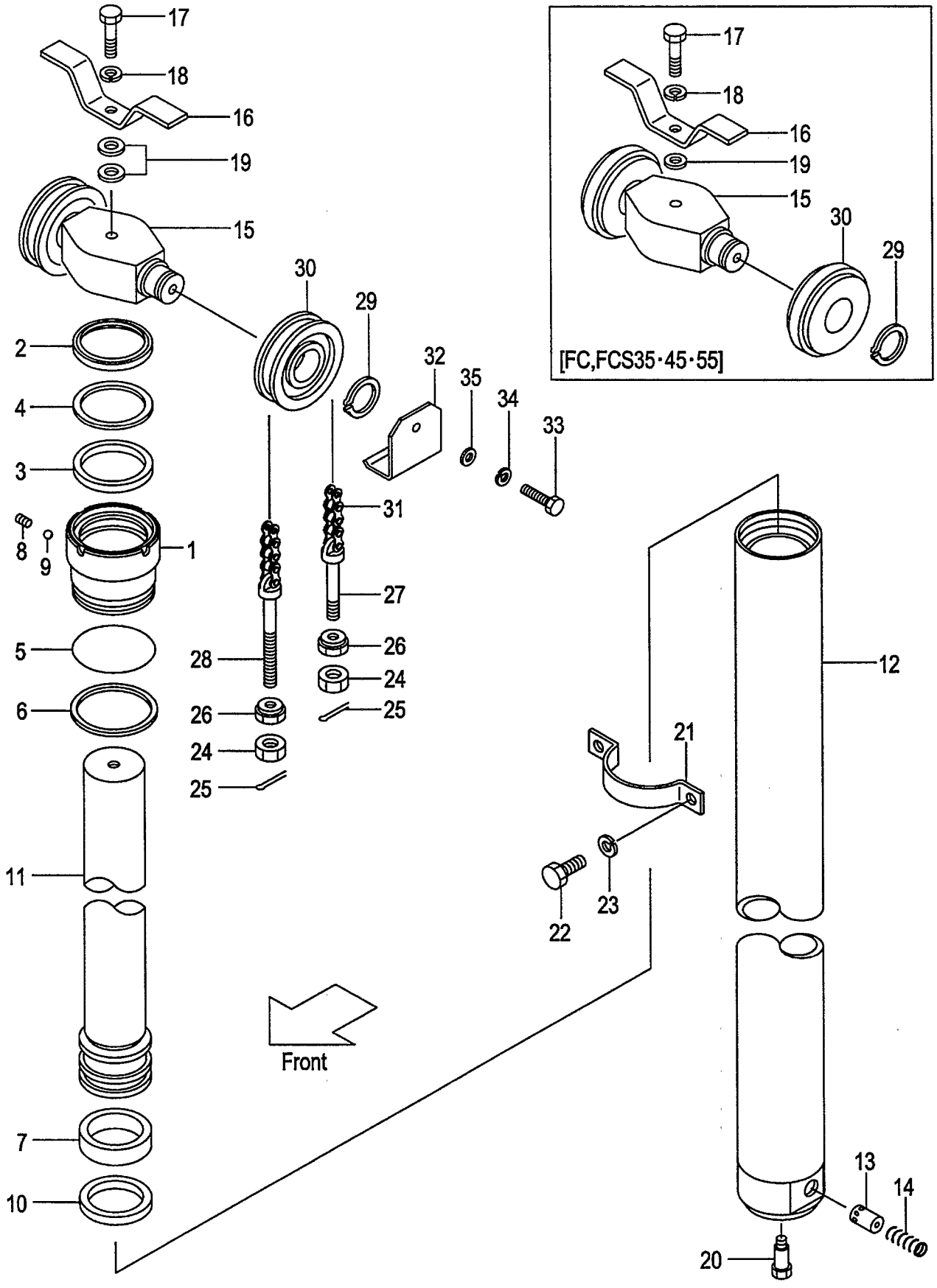

A:VFM39F

Item No	Part No.	Mark	Description		Req'd	Remarks : Serial No.
-	22438-45751		CHAIN VFM366	ﾁｪｰﾝ	2	
-	22438-45751		CHAIN VFM370	ﾁｪｰﾝ	2	
-	22438-45751		CHAIN VFM375	ﾁｪｰﾝ	2	
-	22438-45831		CHAIN VFM400	ﾁｪｰﾝ	2	
-	22438-45871		CHAIN VFM425	ﾁｪｰﾝ	2	
-	22438-45931		CHAIN VFM450	ﾁｪｰﾝ	2	
-	22438-45971		CHAIN VFM475	ﾁｪｰﾝ	2	
-	22438-46031		CHAIN VFM500	ﾁｪｰﾝ	2	
-	22438-46151		CHAIN VFM550	ﾁｪｰﾝ	2	
-	22438-46251		CHAIN VFM600	ﾁｪｰﾝ	2	
-	09001-10037		CHAIN VFM200	ﾁｪｰﾝ	2	[FC][FCS35][FCS45][FCS55]
-	09001-10041		CHAIN VFM225	ﾁｪｰﾝ	2	[FC][FCS35][FCS45][FCS55]
-	09001-10043		CHAIN VFM250	ﾁｪｰﾝ	2	[FC][FCS35][FCS45][FCS55]
-	09001-10047		CHAIN VFM270	ﾁｪｰﾝ	2	[FC][FCS35][FCS45][FCS55]
-	09001-10047		CHAIN VFM275	ﾁｪｰﾝ	2	[FC][FCS35][FCS45][FCS55]
-	09001-10049		CHAIN VFM300	ﾁｪｰﾝ	2	[FC][FCS35][FCS45][FCS55]
-	09001-10053		CHAIN VFM325	ﾁｪｰﾝ	2	[FC][FCS35][FCS45][FCS55]
-	09001-10053		CHAIN VFM330	ﾁｪｰﾝ	2	[FC][FCS35][FCS45][FCS55]
-	09001-10057		CHAIN VFM350	ﾁｪｰﾝ	2	[FC][FCS35][FCS45][FCS55]
-	09001-10059		CHAIN VFM366	ﾁｪｰﾝ	2	[FC][FCS35][FCS45][FCS55]
-	09001-10059		CHAIN VFM370	ﾁｪｰﾝ	2	[FC][FCS35][FCS45][FCS55]
-	09001-10061		CHAIN VFM375	ﾁｪｰﾝ	2	[FC][FCS35][FCS45][FCS55]
-	09001-10067		CHAIN VFM400	ﾁｪｰﾝ	2	[FC][FCS35][FCS45][FCS55]
-	09001-10071		CHAIN VFM425	ﾁｪｰﾝ	2	[FC][FCS35][FCS45][FCS55]
-	09001-10075		CHAIN VFM450	ﾁｪｰﾝ	2	[FC][FCS35][FCS45][FCS55]
-	09001-10077		CHAIN VFM475	ﾁｪｰﾝ	2	[FC][FCS35][FCS45][FCS55]
-	09001-10081		CHAIN VFM500	ﾁｪｰﾝ	2	[FC][FCS35][FCS45][FCS55]
-	09001-10091		CHAIN VFM550	ﾁｪｰﾝ	2	[FC][FCS35][FCS45][FCS55]
-	09001-10099		CHAIN VFM600	ﾁｪｰﾝ	2	[FC][FCS35][FCS45][FCS55]
32	534A3-04001		COVER,CHAIN	ｶﾊﾞｰ	2	[EXE][EXN]
33	01100-16016		BOLT	ﾎﾞﾙﾄ	2	[EXE][EXN]
34	02010-00016		WASHER	ﾜｯｼｬ	2	[EXE][EXN]
35	02000-00016		WASHER	ﾜｯｼｬ	2	[EXE][EXN]
K1	277T0-59801		KIT,OVERHAUL	ｵｰﾊﾞﾎｰﾙｷｯﾄ	1	INC.2-7,10

FIG.196 LIFT CYLINDER(REAR)[VFM39F]

(M5020550) リフトシリンダ(リヤー)

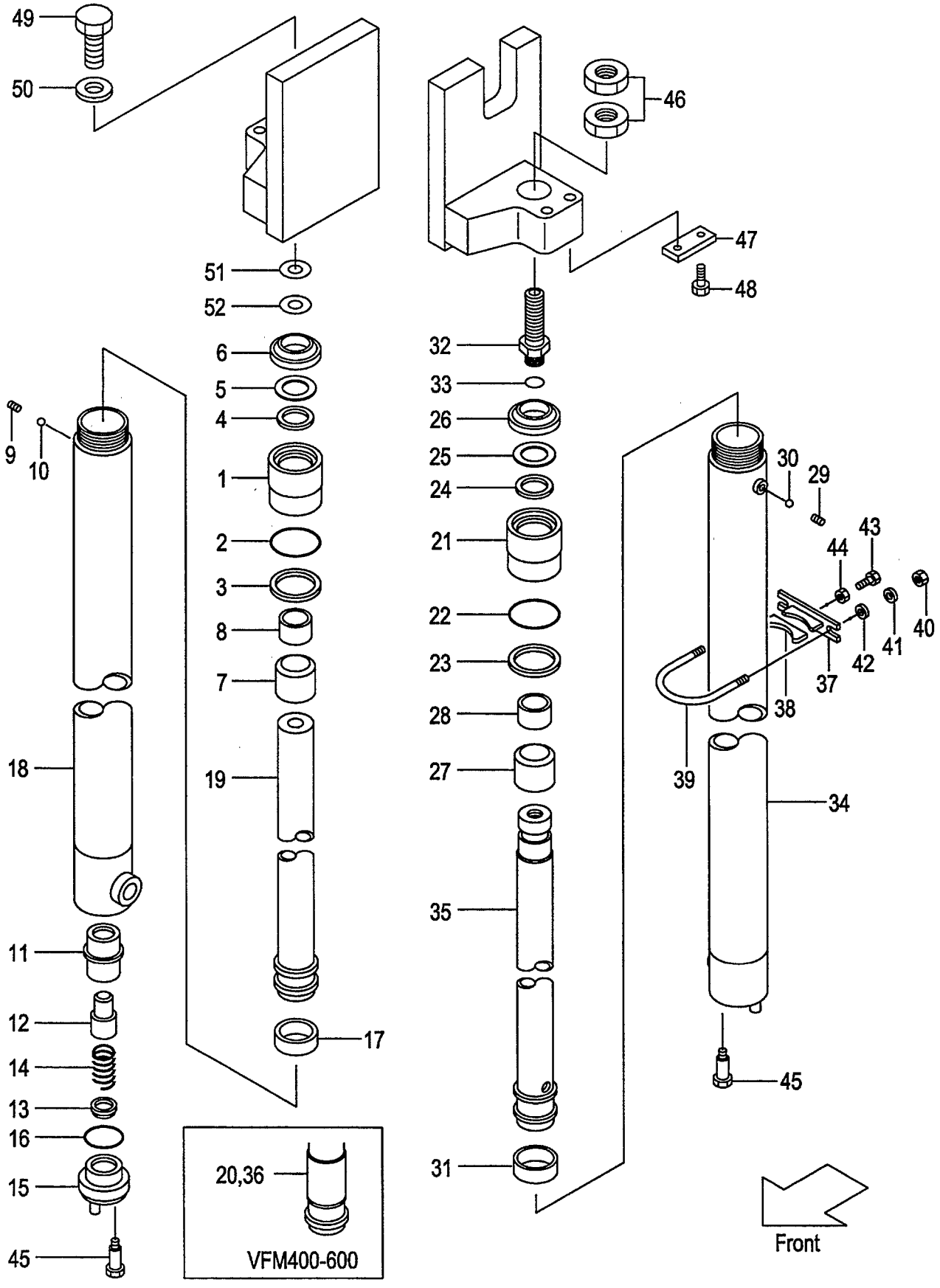

A:VFM39F

Item No	Part No.	Mark	Description		Req'd	Remarks : Serial No.
A1	277T0-51411		CYL-ASSY,RH VFM200	ｼﾘﾝﾀﾞｱｯｾﾝ	1	INC.1-19
-	277T0-51421		CYL-ASSY,RH VFM225	ｼﾘﾝﾀﾞｱｯｾﾝ	1	INC.1-19
-	277T0-51431		CYL-ASSY,RH VFM250	ｼﾘﾝﾀﾞｱｯｾﾝ	1	INC.1-19
-	277T0-51441		CYL-ASSY,RH VFM270	ｼﾘﾝﾀﾞｱｯｾﾝ	1	INC.1-19
-	277T0-51451		CYL-ASSY,RH VFM275	ｼﾘﾝﾀﾞｱｯｾﾝ	1	INC.1-19
-	277T0-51401		CYL-ASSY,RH VFM300	ｼﾘﾝﾀﾞｱｯｾﾝ	1	INC.1-19
-	277T0-51461		CYL-ASSY,RH VFM325	ｼﾘﾝﾀﾞｱｯｾﾝ	1	INC.1-19
-	277T0-51471		CYL-ASSY,RH VFM330	ｼﾘﾝﾀﾞｱｯｾﾝ	1	INC.1-19
-	277T0-51481		CYL-ASSY,RH VFM350	ｼﾘﾝﾀﾞｱｯｾﾝ	1	INC.1-19
-	277T0-51491		CYL-ASSY,RH VFM366	ｼﾘﾝﾀﾞｱｯｾﾝ	1	INC.1-19
-	277T0-51501		CYL-ASSY,RH VFM370	ｼﾘﾝﾀﾞｱｯｾﾝ	1	INC.1-19
-	277T0-51511		CYL-ASSY,RH VFM375	ｼﾘﾝﾀﾞｱｯｾﾝ	1	INC.1-19
-	277T0-51521		CYL-ASSY,RH VFM400	ｼﾘﾝﾀﾞｱｯｾﾝ	1	INC.1-20
-	277T0-51531		CYL-ASSY,RH VFM425	ｼﾘﾝﾀﾞｱｯｾﾝ	1	INC.1-20
-	277T0-51541		CYL-ASSY,RH VFM450	ｼﾘﾝﾀﾞｱｯｾﾝ	1	INC.1-20
-	277T0-51551		CYL-ASSY,RH VFM475	ｼﾘﾝﾀﾞｱｯｾﾝ	1	INC.1-20
-	277T0-51561		CYL-ASSY,RH VFM500	ｼﾘﾝﾀﾞｱｯｾﾝ	1	INC.1-20
-	277T0-51571		CYL-ASSY,RH VFM550	ｼﾘﾝﾀﾞｱｯｾﾝ	1	INC.1-20
-	277T0-51581		CYL-ASSY,RH VFM600	ｼﾘﾝﾀﾞｱｯｾﾝ	1	INC.1-20
1	234F0-52501		CAP,CYL	ｷｬｯﾌﾟ	1	
2	214A8-42571	*	O-RING	Oﾘﾝｸﾞ	1	
3	214J0-53681	*	RING,BACK-UP	ﾘﾝｸﾞ	1	
4	23918-52161	*	PACKING	ﾊﾟｯｷﾝｸﾞ	1	
5	23918-52171	*	RING,BACK-UP	ﾘﾝｸﾞ	1	
6	214A8-46001	*	SEAL,DUST	ｼｰﾙ	1	
A2	234A8-40611		SLEEVE-ASSY	ｽﾘｰﾌﾞｱｯｾﾝ	1	INC.7,8
7	NO PART NO.	#	SLEEVE	ｽﾘｰﾌﾞ	1	
8	23678-42301		BUSHING	ﾌﾞｯｼﾝｸﾞ	1	
9	234A0-52611		PLUG	ﾌﾟﾗｸﾞ	1	
10	03190-00006		BALL	ﾎﾞｰﾙ	1	
11	53658-43021		SLEEVE	ｽﾘｰﾌﾞ	1	
12	53658-43011		PISTON	ﾋﾟｽﾄﾝ	1	
13	53658-43001		VALVE,CHECK	ﾊﾞﾙﾌﾞ	1	
14	53658-43031		SPRING	ｽﾌﾟﾘﾝｸﾞ	1	
15	53658-43041		PLUG	ﾌﾟﾗｸﾞ	1	
16	03320-00340		O-RING	Oﾘﾝｸﾞ	1	
17	27970-53141	*	WEARING	ｳｴｱﾘﾝｸﾞ	1	
18	277T0-51011		BODY,CYL,RH VFM200	ﾎﾞﾃﾞｨ	1	
-	277T0-51021		BODY,CYL,RH VFM225	ﾎﾞﾃﾞｨ	1	
-	277T0-51031		BODY,CYL,RH VFM250	ﾎﾞﾃﾞｨ	1	
-	277T0-51041		BODY,CYL,RH VFM270	ﾎﾞﾃﾞｨ	1	
-	277T0-51051		BODY,CYL,RH VFM275	ﾎﾞﾃﾞｨ	1	
-	277T0-51001		BODY,CYL,RH VFM300	ﾎﾞﾃﾞｨ	1	
-	277T0-51061		BODY,CYL,RH VFM325	ﾎﾞﾃﾞｨ	1	
-	277T0-51071		BODY,CYL,RH VFM330	ﾎﾞﾃﾞｨ	1	
-	277T0-51081		BODY,CYL,RH VFM350	ﾎﾞﾃﾞｨ	1	
-	277T0-51091		BODY,CYL,RH VFM366	ﾎﾞﾃﾞｨ	1	
-	277T0-51101		BODY,CYL,RH VFM370	ﾎﾞﾃﾞｨ	1	
-	277T0-51111		BODY,CYL,RH VFM375	ﾎﾞﾃﾞｨ	1	
-	277T0-51121		BODY,CYL,RH VFM400	ﾎﾞﾃﾞｨ	1	

FIG.196 LIFT CYLINDER(REAR)[VFM39F]

(M5020550) リフトシリンダ(リヤー)

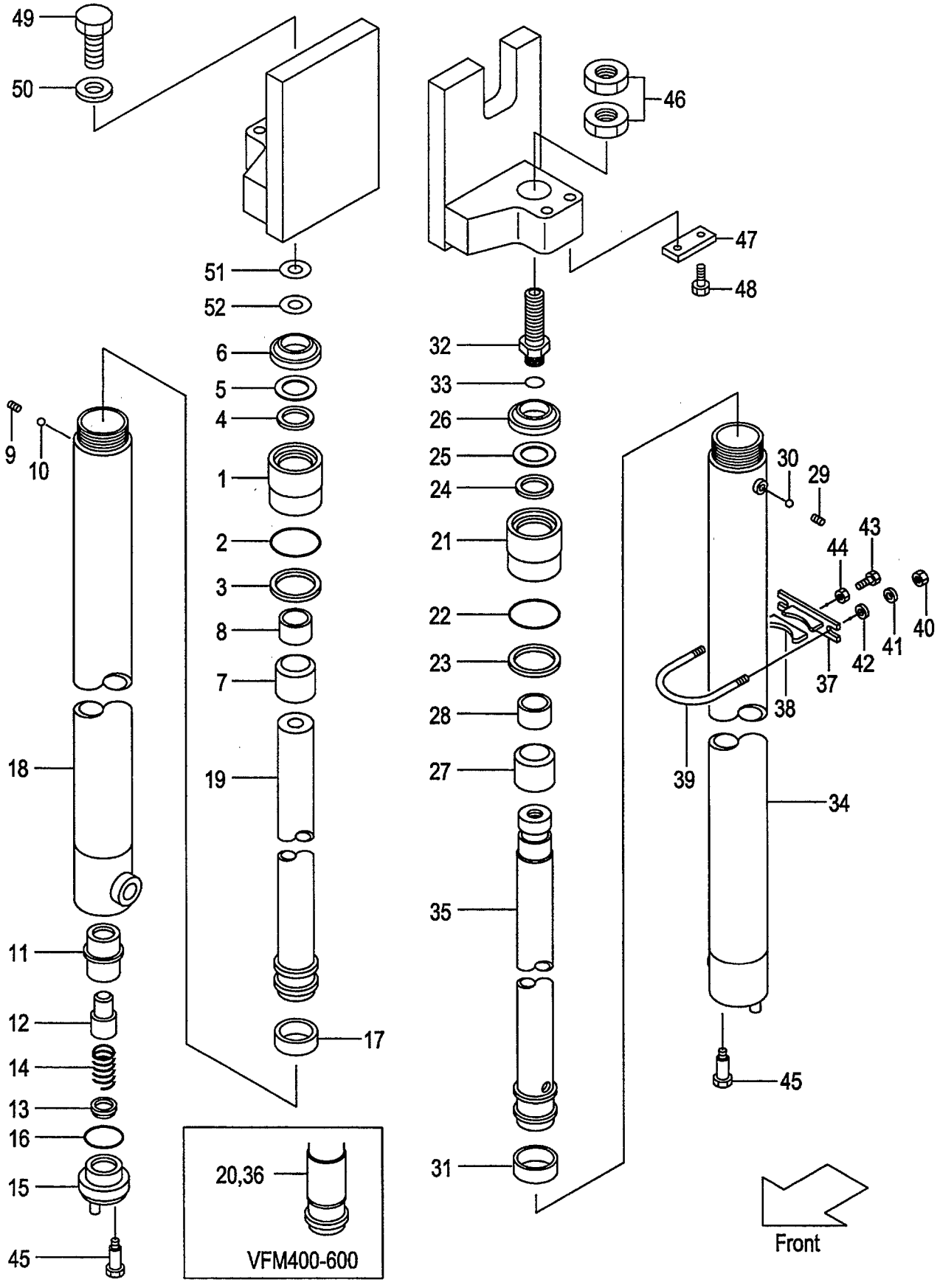

A:VFM39F

Item No	Part No.	Mark	Description		Req'd	Remarks : Serial No.
-	277T0-51131		BODY,CYL,RH VFM425	ﾎﾞﾃﾞｨ	1	
-	277T0-51141		BODY,CYL,RH VFM450	ﾎﾞﾃﾞｨ	1	
-	277T0-51151		BODY,CYL,RH VFM475	ﾎﾞﾃﾞｨ	1	
-	277T0-51161		BODY,CYL,RH VFM500	ﾎﾞﾃﾞｨ	1	
-	277T0-51171		BODY,CYL,RH VFM550	ﾎﾞﾃﾞｨ	1	
-	277T0-51181		BODY,CYL,RH VFM600	ﾎﾞﾃﾞｨ	1	
19	229L0-51211		ROD,PISTON VFM200	ﾛｯﾄﾞ	1	
-	229L0-51221		ROD,PISTON VFM225	ﾛｯﾄﾞ	1	
-	229L0-51231		ROD,PISTON VFM250	ﾛｯﾄﾞ	1	
-	229L0-51241		ROD,PISTON VFM270	ﾛｯﾄﾞ	1	
-	229L0-51251		ROD,PISTON VFM275	ﾛｯﾄﾞ	1	
-	229L0-51201		ROD,PISTON VFM300	ﾛｯﾄﾞ	1	
-	229L0-51261		ROD,PISTON VFM325	ﾛｯﾄﾞ	1	
-	229L0-51271		ROD,PISTON VFM330	ﾛｯﾄﾞ	1	
-	229L0-51281		ROD,PISTON VFM350	ﾛｯﾄﾞ	1	
-	229L0-51291		ROD,PISTON VFM366	ﾛｯﾄﾞ	1	
-	229L0-51301		ROD,PISTON VFM370	ﾛｯﾄﾞ	1	
-	229L0-51311		ROD,PISTON VFM375	ﾛｯﾄﾞ	1	
-	229L0-51321		ROD,PISTON VFM400	ﾛｯﾄﾞ	1	
-	229L0-51331		ROD,PISTON VFM425	ﾛｯﾄﾞ	1	
-	229L0-51341		ROD,PISTON VFM450	ﾛｯﾄﾞ	1	
-	229L0-51351		ROD,PISTON VFM475	ﾛｯﾄﾞ	1	
-	229L0-51361		ROD,PISTON VFM500	ﾛｯﾄﾞ	1	
-	229L0-51371		ROD,PISTON VFM550	ﾛｯﾄﾞ	1	
-	229L0-51381		ROD,PISTON VFM600	ﾛｯﾄﾞ	1	
20	24450-52571		SPACER	ｽﾍﾟｰｻ	1	(VFM400-500)
-	24450-52571		SPACER	ｽﾍﾟｰｻ	2	(VFM550-600)
A3	277T0-51611		CYL-ASSY,LH VFM200	ｼﾘﾝﾀﾞｱｯｾﾝ	1	INC.21-35
-	277T0-51621		CYL-ASSY,LH VFM225	ｼﾘﾝﾀﾞｱｯｾﾝ	1	INC.21-35
-	277T0-51631		CYL-ASSY,LH VFM250	ｼﾘﾝﾀﾞｱｯｾﾝ	1	INC.21-35
-	277T0-51641		CYL-ASSY,LH VFM270	ｼﾘﾝﾀﾞｱｯｾﾝ	1	INC.21-35
-	277T0-51651		CYL-ASSY,LH VFM275	ｼﾘﾝﾀﾞｱｯｾﾝ	1	INC.21-35
-	277T0-51601		CYL-ASSY,LH VFM300	ｼﾘﾝﾀﾞｱｯｾﾝ	1	INC.21-35
-	277T0-51661		CYL-ASSY,LH VFM325	ｼﾘﾝﾀﾞｱｯｾﾝ	1	INC.21-35
-	277T0-51671		CYL-ASSY,LH VFM330	ｼﾘﾝﾀﾞｱｯｾﾝ	1	INC.21-35
-	277T0-51681		CYL-ASSY,LH VFM350	ｼﾘﾝﾀﾞｱｯｾﾝ	1	INC.21-35
-	277T0-51691		CYL-ASSY,LH VFM366	ｼﾘﾝﾀﾞｱｯｾﾝ	1	INC.21-35
-	277T0-51701		CYL-ASSY,LH VFM370	ｼﾘﾝﾀﾞｱｯｾﾝ	1	INC.21-35
-	277T0-51711		CYL-ASSY,LH VFM375	ｼﾘﾝﾀﾞｱｯｾﾝ	1	INC.21-35
-	277T0-51721		CYL-ASSY,LH VFM400	ｼﾘﾝﾀﾞｱｯｾﾝ	1	INC.21-36
-	277T0-51731		CYL-ASSY,LH VFM425	ｼﾘﾝﾀﾞｱｯｾﾝ	1	INC.21-36
-	277T0-51741		CYL-ASSY,LH VFM450	ｼﾘﾝﾀﾞｱｯｾﾝ	1	INC.21-36
-	277T0-51751		CYL-ASSY,LH VFM475	ｼﾘﾝﾀﾞｱｯｾﾝ	1	INC.21-36
-	277T0-51761		CYL-ASSY,LH VFM500	ｼﾘﾝﾀﾞｱｯｾﾝ	1	INC.21-36
-	277T0-51771		CYL-ASSY,LH VFM550	ｼﾘﾝﾀﾞｱｯｾﾝ	1	INC.21-36
-	277T0-51781		CYL-ASSY,LH VFM600	ｼﾘﾝﾀﾞｱｯｾﾝ	1	INC.21-36
21	234F0-52501		CAP,CYL	ｷｬｯﾌﾟ	1	
22	214A8-42571	*	O-RING	Oﾘﾝｸﾞ	1	
23	214J0-53681	*	RING,BACK-UP	ﾘﾝｸﾞ	1	
24	23918-52161	*	PACKING	ﾊﾟｯｷﾝｸﾞ	1	

FIG.196 LIFT CYLINDER(REAR)[VFM39F]

(M5020550) リフトシリンダ(リヤー)

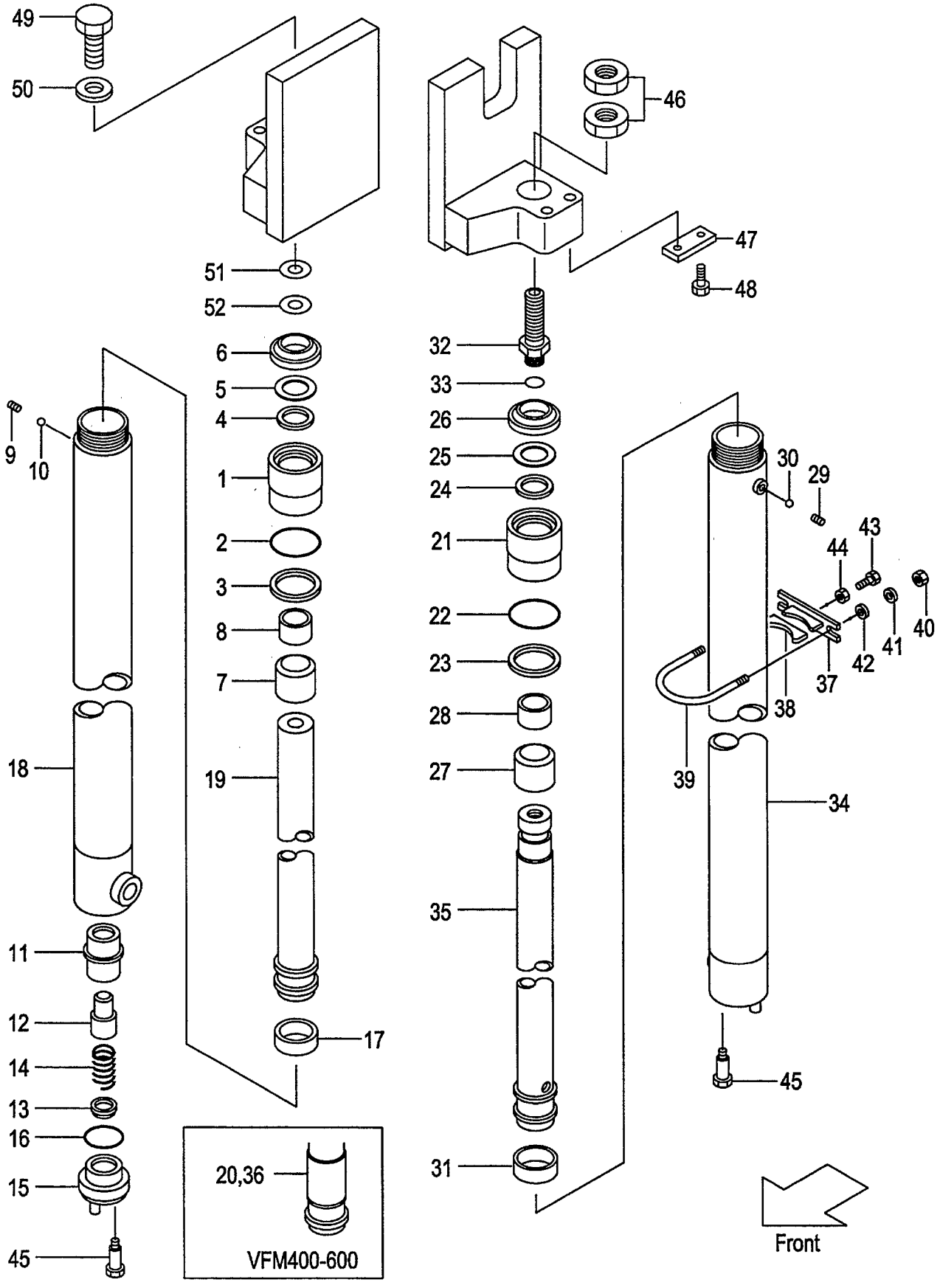

A:VFM39F

Item No	Part No.	Mark	Description		Req'd	Remarks : Serial No.
25	23918-52171	*	RING,BACK-UP	ﾘﾝｸﾞ	1	
26	214A8-46001	*	SEAL,DUST	ｼｰﾙ	1	
A4	234A8-40611		SLEEVE-ASSY	ｽﾘｰﾌﾞｱｯｾﾝ	1	INC.27,28
27	NO PART NO.	#	SLEEVE	ｽﾘｰﾌﾞ	1	
28	23678-42301		BUSHING	ﾌﾞｯｼﾝｸﾞ	1	
29	234A0-52611		PLUG	ﾌﾟﾗｸﾞ	1	
30	03190-00006		BALL	ﾎﾞｰﾙ	1	
31	27970-53141	*	WEARING	ｳｴｱﾘﾝｸﾞ	1	
32	214J0-53781		NIPPLE	ﾆｯﾌﾟﾙ	1	
33	03320-00240		O-RING	Oﾘﾝｸﾞ	1	
34	277T0-51211		BODY,CYL,LH VFM200	ﾎﾞﾃﾞｨ	1	
-	277T0-51221		BODY,CYL,LH VFM225	ﾎﾞﾃﾞｨ	1	
-	277T0-51231		BODY,CYL,LH VFM250	ﾎﾞﾃﾞｨ	1	
-	277T0-51241		BODY,CYL,LH VFM270	ﾎﾞﾃﾞｨ	1	
-	277T0-51251		BODY,CYL,LH VFM275	ﾎﾞﾃﾞｨ	1	
-	277T0-51201		BODY,CYL,LH VFM300	ﾎﾞﾃﾞｨ	1	
-	277T0-51261		BODY,CYL,LH VFM325	ﾎﾞﾃﾞｨ	1	
-	277T0-51271		BODY,CYL,LH VFM330	ﾎﾞﾃﾞｨ	1	
-	277T0-51281		BODY,CYL,LH VFM350	ﾎﾞﾃﾞｨ	1	
-	277T0-51291		BODY,CYL,LH VFM366	ﾎﾞﾃﾞｨ	1	
-	277T0-51301		BODY,CYL,LH VFM370	ﾎﾞﾃﾞｨ	1	
-	277T0-51311		BODY,CYL,LH VFM375	ﾎﾞﾃﾞｨ	1	
-	277T0-51321		BODY,CYL,LH VFM400	ﾎﾞﾃﾞｨ	1	
-	277T0-51331		BODY,CYL,LH VFM425	ﾎﾞﾃﾞｨ	1	
-	277T0-51341		BODY,CYL,LH VFM450	ﾎﾞﾃﾞｨ	1	
-	277T0-51351		BODY,CYL,LH VFM475	ﾎﾞﾃﾞｨ	1	
-	277T0-51361		BODY,CYL,LH VFM500	ﾎﾞﾃﾞｨ	1	
-	277T0-51371		BODY,CYL,LH VFM550	ﾎﾞﾃﾞｨ	1	
-	277T0-51381		BODY,CYL,LH VFM600	ﾎﾞﾃﾞｨ	1	
35	214J0-51711		ROD,PISTON VFM200	ﾛｯﾄﾞ	1	
-	214J0-51721		ROD,PISTON VFM225	ﾛｯﾄﾞ	1	
-	214J0-51731		ROD,PISTON VFM250	ﾛｯﾄﾞ	1	
-	214J0-51741		ROD,PISTON VFM270	ﾛｯﾄﾞ	1	
-	214J0-51751		ROD,PISTON VFM275	ﾛｯﾄﾞ	1	
-	214J0-51701		ROD,PISTON VFM300	ﾛｯﾄﾞ	1	
-	214J0-51761		ROD,PISTON VFM325	ﾛｯﾄﾞ	1	
-	214J0-51771		ROD,PISTON VFM330	ﾛｯﾄﾞ	1	
-	214J0-51781		ROD,PISTON VFM350	ﾛｯﾄﾞ	1	
-	214J0-51791		ROD,PISTON VFM366	ﾛｯﾄﾞ	1	
-	214J0-51801		ROD,PISTON VFM370	ﾛｯﾄﾞ	1	
-	214J0-51811		ROD,PISTON VFM375	ﾛｯﾄﾞ	1	
-	214J0-51821		ROD,PISTON VFM400	ﾛｯﾄﾞ	1	
-	214J0-51831		ROD,PISTON VFM425	ﾛｯﾄﾞ	1	
-	214J0-51841		ROD,PISTON VFM450	ﾛｯﾄﾞ	1	
-	214J0-51851		ROD,PISTON VFM475	ﾛｯﾄﾞ	1	
-	214J0-51861		ROD,PISTON VFM500	ﾛｯﾄﾞ	1	
-	214J0-51871		ROD,PISTON VFM550	ﾛｯﾄﾞ	1	
-	214J0-51881		ROD,PISTON VFM600	ﾛｯﾄﾞ	1	
36	24450-52571		SPACER	ｽﾍﾟｰｻ	1	(VFM400-500)
-	24450-52571		SPACER	ｽﾍﾟｰｻ	2	(VFM550-600)

FIG.196 LIFT CYLINDER(REAR)[VFM39F]

(M5020550) リフトシリンダ(リヤー)

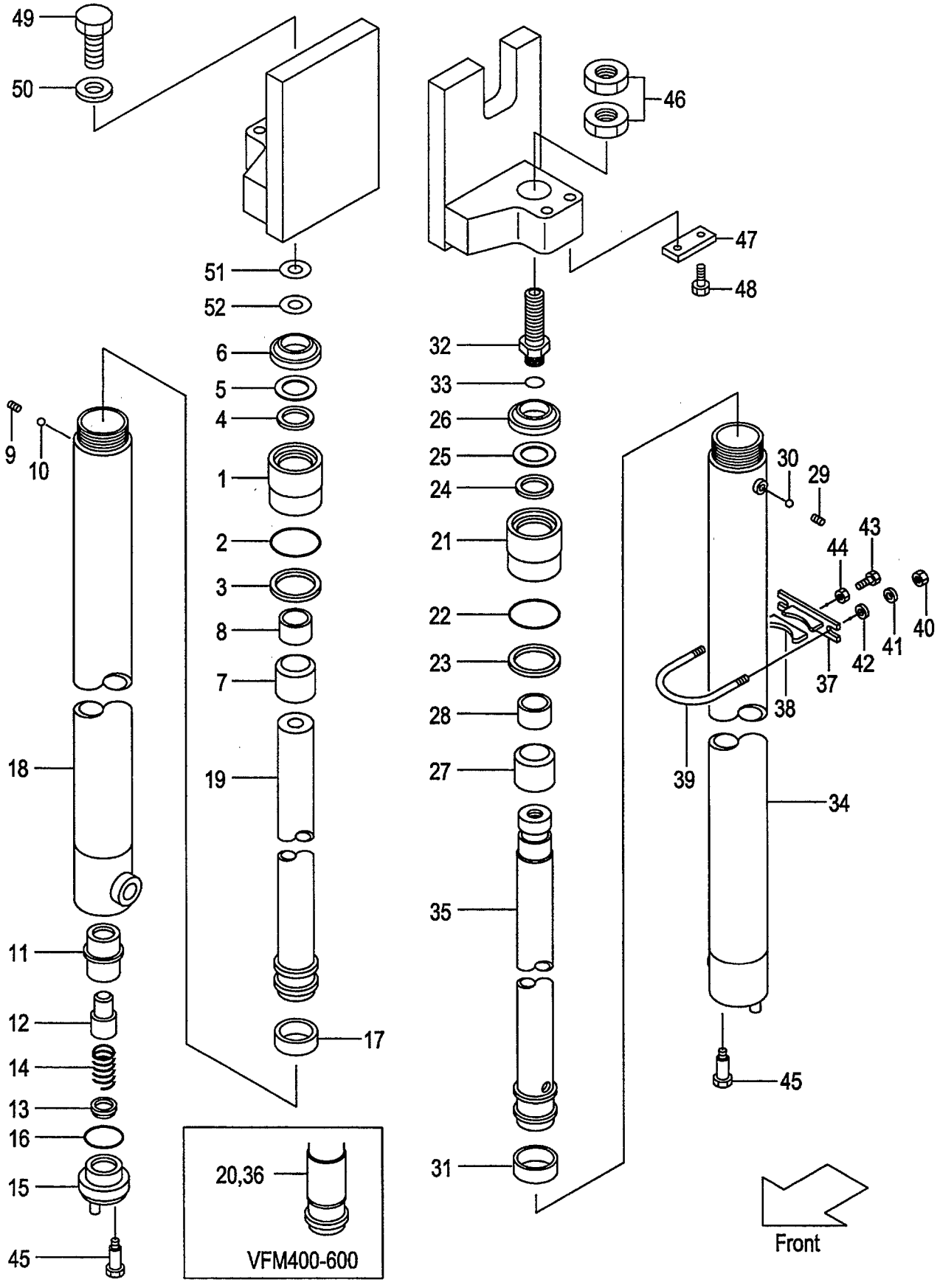

A:VFM39F

Item No	Part No.	Mark	Description		Req'd	Remarks : Serial No.
A5	215E8-42171		SUPPORT-ASSY	ｻﾎﾟｰﾄｱｯｾﾝ	2	INC.37,38
37	215E8-42181		SUPPORT	ｻﾎﾟｰﾄ	2	
38	24868-42111		RUBBER	ﾗﾊﾞｰ	2	
39	234A8-42551		U-BOLT	Uﾎﾞﾙﾄ	2	
40	234A8-42561		NUT	ﾅｯﾄ	4	
41	02010-20010		WASHER	ﾜｯｼｬ	4	
42	02000-20010		WASHER	ﾜｯｼｬ	4	
43	232A8-42201		BOLT	ﾎﾞﾙﾄ	2	
44	234A8-42571		NUT	ﾅｯﾄ	2	
45	214A8-42661		BOLT	ﾎﾞﾙﾄ	2	
46	24320-52001		NUT	ﾅｯﾄ	2	
47	23648-50161		PLATE,KEY	ﾌﾟﾚｰﾄ	1	
48	01184-10020		BOLT & WASHER	ﾎﾞﾙﾄ&ﾜｯｼｬ	2	
49	01103-14040		BOLT	ﾎﾞﾙﾄ	1	
50	02011-00014		WASHER	ﾜｯｼｬ	1	
51	23917-42191		SHIM,T-1.0	ｼﾑ	5	
52	22679-43831		SHIM,T-0.2	ｼﾑ	5	
K1	234F0-59801		KIT,OVERHAUL RH	ｵｰﾊﾞｰﾎｰﾙｷｯﾄ	1	INC.2-6,17
K2	234F0-59801		KIT,OVERHAUL LH	ｵｰﾊﾞｰﾎｰﾙｷｯﾄ	1	INC.22-26,31

FIG.197 MAST PIPING[VFM39F]

(M5020560) ﾏｽﾄﾊﾟｲﾋﾟﾝｸﾞ

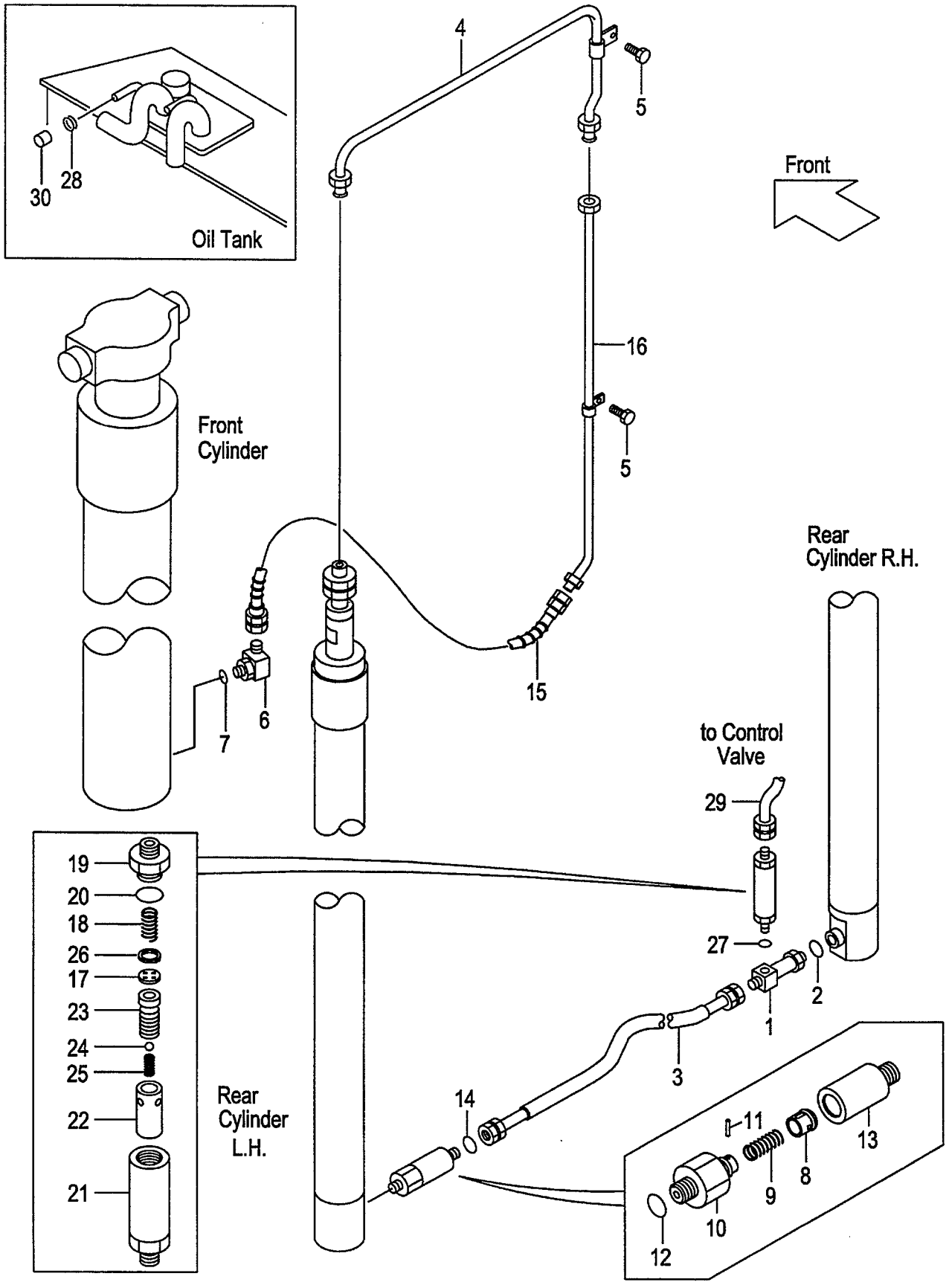

A:VFM39F

Item No	Part No.	Mark	Description		Req'd	Remarks : Serial No.
A1	234A8-41101		THREE-WAY-ASSY	ｽﾘｰｳｪｲｱｯｾﾝ	1	INC.1,2
1	NO PART NO.	#	THREE-WAY	ｽﾘｰｳｴｲ	1	
2	03320-00140		O-RING	Oﾘﾝｸﾞ	1	
3	277T0-62071		HOSE	ﾎｰｽ	1	
4	277T0-62051		PIPE	ﾊﾟｲﾌﾟ	1	
5	01183-06016		BOLT & WASHER	ﾎﾞﾙﾄ&ﾜｯｼｬ	2	
A2	229F0-91001		ELBOW-ASSY	ｴﾙﾎﾞｱｯｾﾝ	1	INC.6,7
6	NO PART NO.	#	ELBOW	ｴﾙﾎﾞ	1	
7	03320-00240		O-RING	Oﾘﾝｸﾞ	1	
A3	234A0-62051		VALVE-ASSY,CUT	ｶｯﾄﾊﾞﾙﾌﾞｱｯｾﾝ	1	INC.8-14
A4	234A8-40701		VALVE-SUB-ASSY,CUT	ｶｯﾄﾊﾞﾙﾌﾞｻﾌﾞｱｯｾﾝ	1	INC.8-12
8	234A8-42602		PISTON	ﾋﾟｽﾄﾝ	1	
9	234A8-42611		SPRING	ｽﾌﾟﾘﾝｸﾞ	1	
10	234A8-42622		NIPPLE	ﾆｯﾌﾟﾙ	1	
11	02270-01014		PIN	ﾋﾟﾝ	1	
12	03320-00140		O-RING	Oﾘﾝｸﾞ	1	
13	234A0-62111		ADAPTER	ｱﾀﾞﾌﾟﾀ	1	
14	03320-00140		O-RING	Oﾘﾝｸﾞ	1	
15	214A0-62151		HOSE	ﾎｰｽ	1	
16	277T0-60311		PIPE VFM200	ﾊﾟｲﾌﾟ	1	
-	277T0-60321		PIPE VFM225	ﾊﾟｲﾌﾟ	1	
-	277T0-60331		PIPE VFM250	ﾊﾟｲﾌﾟ	1	
-	277T0-60341		PIPE VFM270	ﾊﾟｲﾌﾟ	1	
-	277T0-60351		PIPE VFM275	ﾊﾟｲﾌﾟ	1	
-	277T0-60301		PIPE VFM300	ﾊﾟｲﾌﾟ	1	
-	277T0-60361		PIPE VFM325	ﾊﾟｲﾌﾟ	1	
-	277T0-60371		PIPE VFM330	ﾊﾟｲﾌﾟ	1	
-	277T0-60381		PIPE VFM350	ﾊﾟｲﾌﾟ	1	
-	277T0-60391		PIPE VFM366	ﾊﾟｲﾌﾟ	1	
-	277T0-60401		PIPE VFM370	ﾊﾟｲﾌﾟ	1	
-	277T0-60411		PIPE VFM375	ﾊﾟｲﾌﾟ	1	
-	277T0-60421		PIPE VFM400	ﾊﾟｲﾌﾟ	1	
-	277T0-60431		PIPE VFM425	ﾊﾟｲﾌﾟ	1	
-	277T0-60441		PIPE VFM450	ﾊﾟｲﾌﾟ	1	
-	277T0-60451		PIPE VFM475	ﾊﾟｲﾌﾟ	1	
-	277T0-60461		PIPE VFM500	ﾊﾟｲﾌﾟ	1	
-	277T0-60471		PIPE VFM550	ﾊﾟｲﾌﾟ	1	
-	277T0-60481		PIPE VFM600	ﾊﾟｲﾌﾟ	1	
A5	234F8-41001		REGULATOR-ASSY,FLOW	ﾚｷﾞｭﾚｰﾀｱｯｾﾝ	1	INC.17-26
17	NO PART NO.	#	PLATE	ﾌﾟﾚｰﾄ	1	
18	27979-43101		SPRING	ｽﾌﾟﾘﾝｸﾞ	1	
19	NO PART NO.	#	NIPPLE	ﾆｯﾌﾟﾙ	1	
20	03300-00280		O-RING	Oﾘﾝｸﾞ	1	
21	214A8-43011		CASE	ｹｰｽ	1	
22	216G8-42111		SLEEVE	ｽﾘｰﾌﾞ	1	
23	NO PART NO.	#	PISTON	ﾋﾟｽﾄﾝ	1	
24	24459-42951		BALL,NYLON	ﾎﾞｰﾙ	1	
25	214A8-44151		SPRING	ｽﾌﾟﾘﾝｸﾞ	1	
26	02110-00018		RING,SNAP	ｽﾅｯﾌﾟﾘﾝｸﾞ	1	

FIG.197 MAST PIPING[VFM39F]

(M5020560) ﾏｽﾄﾊﾟｲﾋﾟﾝｸﾞ

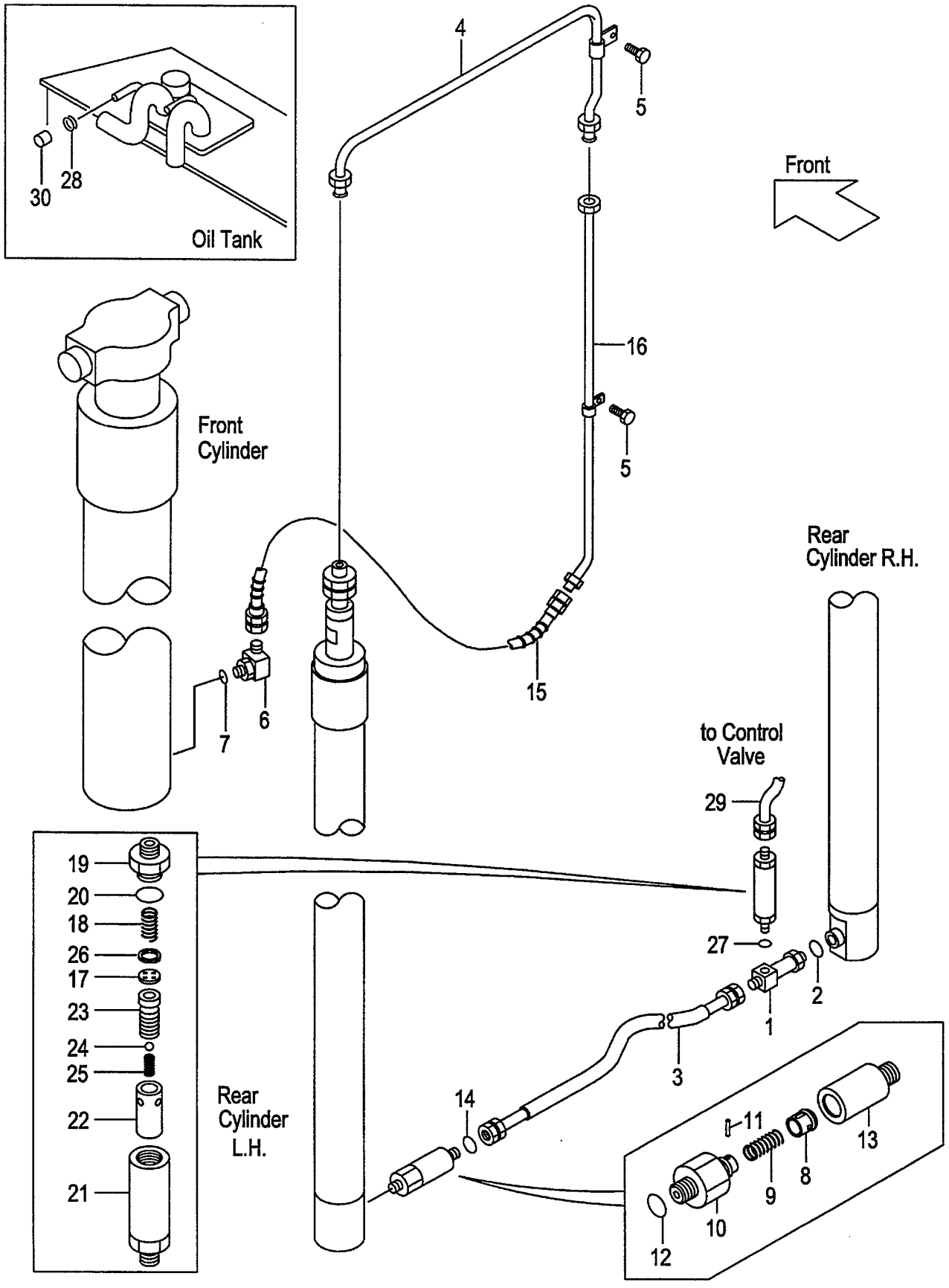

A:VFM39F

Item No	Part No.	Mark	Description		Req'd	Remarks : Serial No.
27	03320-00180		O-RING	Oﾘﾝｸﾞ	1	
28	04914-00019		CLIP	ｸﾘｯﾌﾟ	1	
29	234A8-02101		HOSE	ﾎｰｽ	1	
30	55593-62551		CAP	ｷｬｯﾌﾟ	1	

FIG.198 FORK[VFHM39F]

(M5028160) フォーク

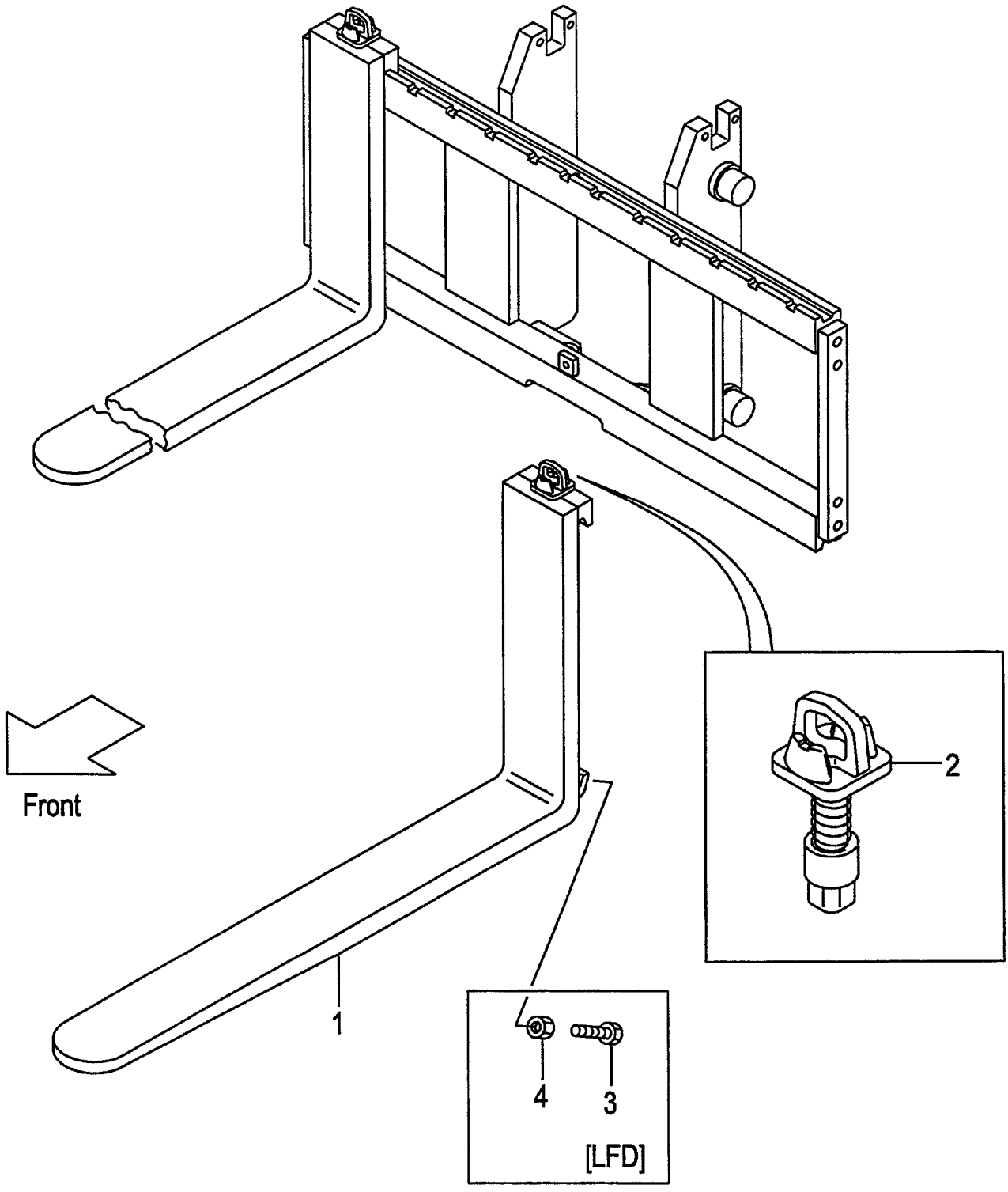

A:VFHM39F

Item No	Part No.	Mark	Description		Req'd	Remarks : Serial No.
1	214J8-10501		FORK	ﾌｫｰｸ	2	(L=1070) INC.2
-	214J8-10581		FORK	ﾌｫｰｸ	2	[LF100] INC.2
-	214J8-10501		FORK	ﾌｫｰｸ	2	[LF107] INC.2
-	214J8-10591		FORK	ﾌｫｰｸ	2	[LF110] INC.2
-	214J8-10601		FORK	ﾌｫｰｸ	2	[LF120] INC.2
-	214J8-10511		FORK	ﾌｫｰｸ	2	[LF122] INC.2
-	214J8-10611		FORK	ﾌｫｰｸ	2	[LF130] INC.2
-	214J8-10521		FORK	ﾌｫｰｸ	2	[LF137] INC.2
-	214J8-10621		FORK	ﾌｫｰｸ	2	[LF140] INC.2
-	214J8-10631		FORK	ﾌｫｰｸ	2	[LF150] INC.2
-	214J8-10531		FORK	ﾌｫｰｸ	2	[LF152] INC.2
-	214J8-10641		FORK	ﾌｫｰｸ	2	[LF160] INC.2
-	214J8-10541		FORK	ﾌｫｰｸ	2	[LF167] INC.2
-	214J8-10651		FORK	ﾌｫｰｸ	2	[LF170] INC.2
-	214J8-10661		FORK	ﾌｫｰｸ	2	[LF180] INC.2
-	214J8-10551		FORK	ﾌｫｰｸ	2	[LF182] INC.2
-	214J8-10671		FORK	ﾌｫｰｸ	2	[LF190] INC.2
-	214J8-10561		FORK	ﾌｫｰｸ	2	[LF197] INC.2
-	214J8-10681		FORK	ﾌｫｰｸ	2	[LF200] INC.2
-	214J8-10571		FORK	ﾌｫｰｸ	2	[LF212] INC.2
-	234F8-10581		FORK	ﾌｫｰｸ	2	[LFD100] INC.2
-	234F8-10501		FORK	ﾌｫｰｸ	2	[LFD107] INC.2
-	234F8-10591		FORK	ﾌｫｰｸ	2	[LFD110] INC.2
-	234F8-10601		FORK	ﾌｫｰｸ	2	[LFD120] INC.2
-	234F8-10511		FORK	ﾌｫｰｸ	2	[LFD122] INC.2
-	234F8-10611		FORK	ﾌｫｰｸ	2	[LFD130] INC.2
-	234F8-10521		FORK	ﾌｫｰｸ	2	[LFD137] INC.2
-	234F8-10621		FORK	ﾌｫｰｸ	2	[LFD140] INC.2
-	234F8-10631		FORK	ﾌｫｰｸ	2	[LFD150] INC.2
-	234F8-10531		FORK	ﾌｫｰｸ	2	[LFD152] INC.2
-	234F8-10641		FORK	ﾌｫｰｸ	2	[LFD160] INC.2
-	234F8-10541		FORK	ﾌｫｰｸ	2	[LFD167] INC.2
-	234F8-10651		FORK	ﾌｫｰｸ	2	[LFD170] INC.2
-	234F8-10661		FORK	ﾌｫｰｸ	2	[LFD180] INC.2
-	234F8-10551		FORK	ﾌｫｰｸ	2	[LFD182] INC.2
-	234F8-10671		FORK	ﾌｫｰｸ	2	[LFD190] INC.2
-	234F8-10561		FORK	ﾌｫｰｸ	2	[LFD197] INC.2
-	234F8-10681		FORK	ﾌｫｰｸ	2	[LFD200] INC.2
-	234F8-10571		FORK	ﾌｫｰｸ	2	[LFD212] INC.2
2	214J8-11002		STOPPER,FORK	ｽﾄｯﾊﾟ	2	
3	216G8-12101		BOLT	ﾎﾞﾙﾄ	4	[LFD100-212]
4	01402-00010		NUT	ﾅｯﾄ	4	[LFD100-212]

FIG.199 LIFT BRACKET[VFHM39F]

(M5020920) リフトブラケット

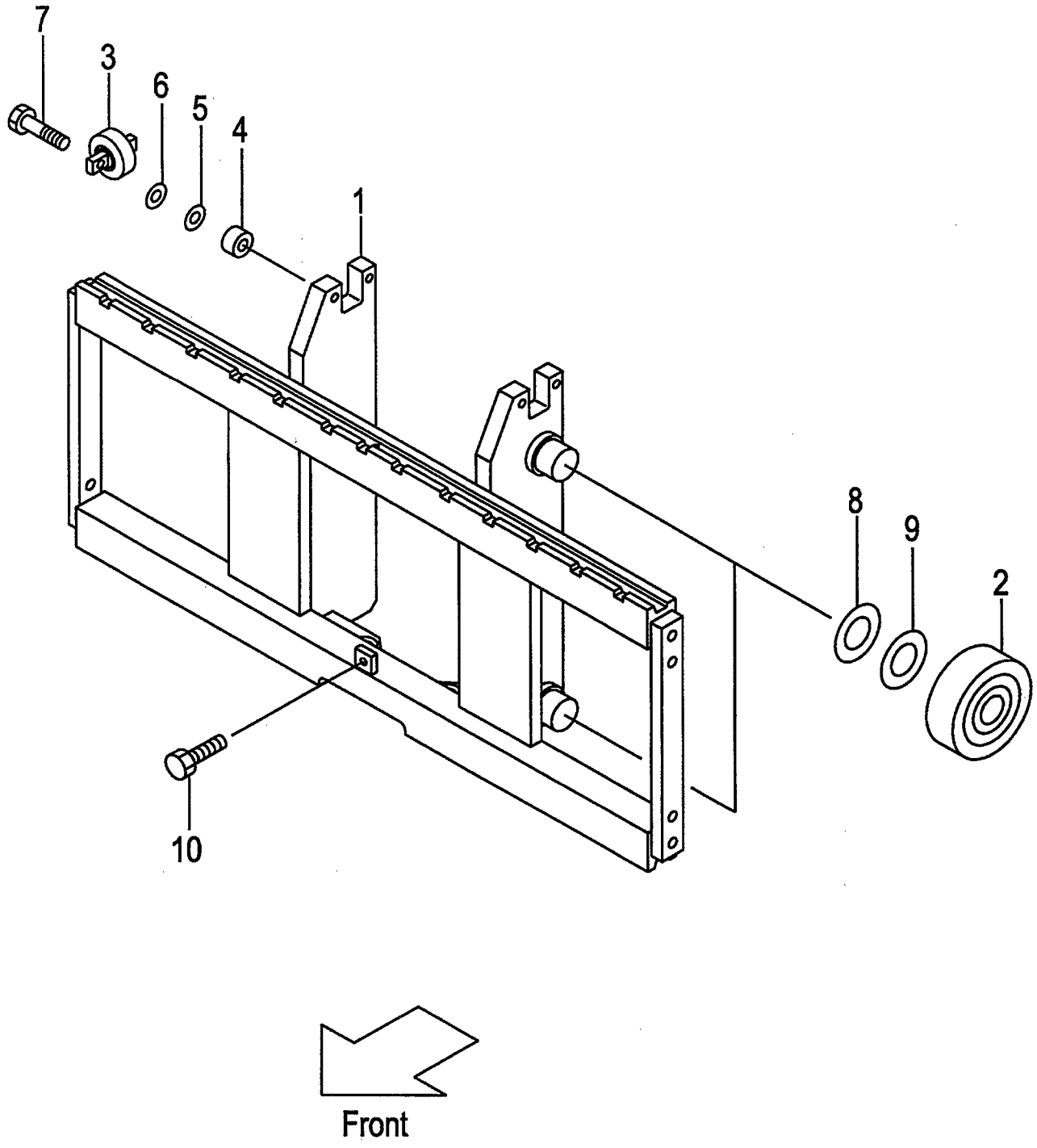

A:VFHM39F

Item No	Part No.	Mark	Description		Req'd	Remarks : Serial No.
1	239F0-90101		BRACKET,LIFT	ﾌﾞﾗｹｯﾄ	1	
-	539F1-64201		BRACKET,LIFT	ﾌﾞﾗｹｯﾄ	1	[WFY110][WFY114][WFY127] [WFY135][WFY138]
-	539F1-64211		BRACKET,LIFT(L)	ﾌﾞﾗｹｯﾄ	1	[WFY135][WFY138][WFY145] [WFY146][WFY154][WFY180]
2	277P8-22051		ROLLER,END	ﾛｰﾗ	4	
-	277P8-22061		ROLLER,END	ﾛｰﾗ	(4)	
-	577P3-74001		ROLLER,END	ﾛｰﾗ	4	[FC][CS35][FCS35][FCS45] [FCS55]
-	577P3-74011		ROLLER,END	ﾛｰﾗ	(4)	[FC][CS35][FCS35][FCS45] [FCS55]
3	23458-32052		ROLLER,SIDE	ﾛｰﾗ	2	
-	514A3-71702		ROLLER,SIDE	ﾛｰﾗ	2	[FC][CS35][FCS35][FCS45] [FCS55]
4	22548-34031		SPACER	ｽﾍﾟｰｻ	4	
5	22548-34051		SHIM,T-0.5	ｼﾑ	5	
6	22548-34061		SHIM,T-1.0	ｼﾑ	5	
7	01184-12040		BOLT & WASHER	ﾎﾞﾙﾄ&ﾜｯｼｬ	4	
8	277P8-22071		SHIM,T-0.5	ｼﾑ	10	
9	277P8-22081		SHIM,T-1.0	ｼﾑ	10	
10	01184-12025		BOLT & WASHER	ﾎﾞﾙﾄ&ﾜｯｼｬ	1	
11	63110-18901	+	CHART,CAPACITY	ﾁｬｰﾄ	1	
-	63110-18911	+	CHART,CAPACITY	ﾁｬｰﾄ	1	[EXA]
-	514A3-82301	+	CHART,CAPACITY	ﾁｬｰﾄ	1	[EXB][EXC][EXE][EXN]
-	524T3-84031	+	CHART,CAPACITY	ﾁｬｰﾄ	1	[EXR]
-	63110-18921	+	CHART,CAPACITY	ﾁｬｰﾄ	1	[EXB/CHINESE]
-	514A3-82341	+	CHART,CAPACITY	ﾁｬｰﾄ	1	[EXB/FRENCH][EXE/FRENCH] [EXEEC/FRENCH]
-	514A3-82331	+	CHART,CAPACITY	ﾁｬｰﾄ	1	[EXB/SPANISH] [EXE/SPANISH] [EXEEC/SPANISH]
-	514A3-82361	+	CHART,CAPACITY	ﾁｬｰﾄ	1	[EXEEC/DANISH] [EXNEC/DANISH]
-	514A3-82381	+	CHART,CAPACITY	ﾁｬｰﾄ	1	[EXEEC/GREEK]
-	514A3-82371	+	CHART,CAPACITY	ﾁｬｰﾄ	1	[EXEEC/ITALIAN]
-	514A3-82351	+	CHART,CAPACITY	ﾁｬｰﾄ	1	[EXEEC/DUTCH]
-	514A3-82391	+	CHART,CAPACITY	ﾁｬｰﾄ	1	[EXEEC/PORTUGUESE]
-	529F3-82101	+	CHART,CAPACITY	ﾁｬｰﾄ	1	[EXNEC/FINISH]
-	529F3-82111	+	CHART,CAPACITY	ﾁｬｰﾄ	1	[EXNEC/SWEDISH]
12	02432-01008	+	RIVET	ﾘﾍﾞｯﾄ	4	

FIG.200 BACKREST[VFHM39F]

(M5028280) ﾊﾞｯｸﾚｽﾄ

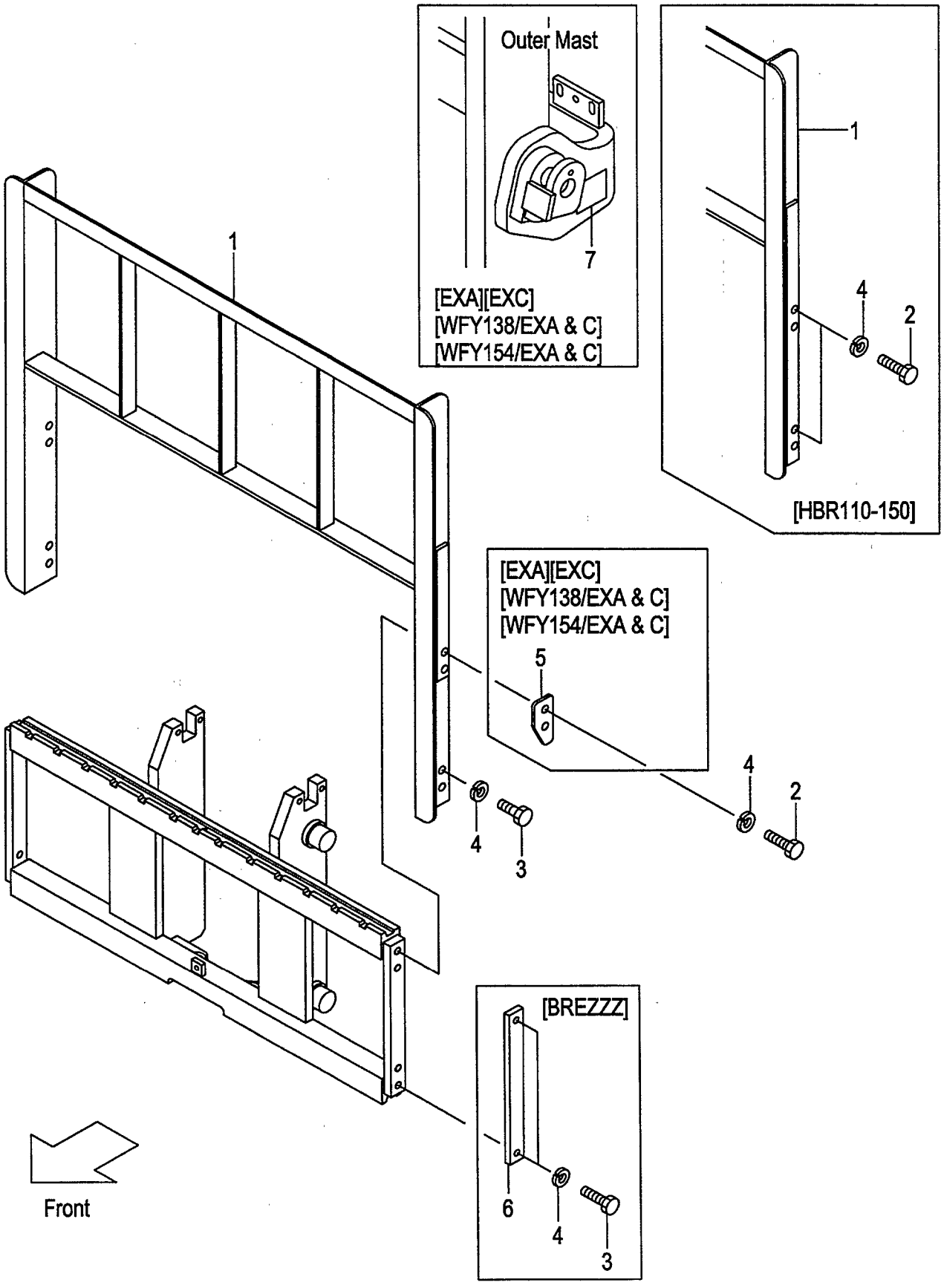

A:VFHM39F

Item No	Part No.	Mark	Description		Req'd	Remarks : Serial No.
1	234F8-22201		BACKREST	ﾊﾞｯｸﾚｽﾄ	1	(WITHOUT BREZZZ)
-	534F2-74001		BACKREST	ﾊﾞｯｸﾚｽﾄ	1	[EXA][EXC]
-	234F8-22101		BACKREST	ﾊﾞｯｸﾚｽﾄ	1	[HBR130]
-	234F8-22111		BACKREST	ﾊﾞｯｸﾚｽﾄ	1	[HBR140]
-	234F8-22121		BACKREST	ﾊﾞｯｸﾚｽﾄ	1	[HBR150]
-	534F1-64401		BACKREST	ﾊﾞｯｸﾚｽﾄ	1	[WFY138]
-	534F1-64401		BACKREST	ﾊﾞｯｸﾚｽﾄ	1	[WFY138/EXA][WFY138/EXC]
-	534F1-64411		BACKREST	ﾊﾞｯｸﾚｽﾄ	1	[WFY154]
-	534F1-64411		BACKREST	ﾊﾞｯｸﾚｽﾄ	1	[WFY154/EXA][WFY154/EXC]
2	01100-14030		BOLT	ﾎﾞﾙﾄ	4	(WITHOUT BREZZZ)
-	01100-14035		BOLT	ﾎﾞﾙﾄ	4	[EXA][EXC][WFY138/EXA&C] [WFY154/EXA&C]
-	01100-14030		BOLT	ﾎﾞﾙﾄ	8	[HBR130][HBR140][HBR150]
3	01100-14025		BOLT	ﾎﾞﾙﾄ	4	(WITHOUT HBR130-150)
4	02010-00014		WASHER	ﾜｯｼｬ	8	
-	02010-00014		WASHER	ﾜｯｼｬ	4	[BREZZZ]
5	534A2-74051		PLATE,STOPPER	ﾌﾟﾚｰﾄ	2	[EXA][EXC][WFY138/EXA&C] [WFY154/EXA&C]
6	24450-92021		PLATE,SIDE	ﾌﾟﾚｰﾄ	2	[BREZZZ]
7	534A2-74301		DECAL,CAUTION	ﾃﾞｶﾙ	1	[EXA][EXC][WFY138/EXA&C] [WFY154/EXA&C]

FIG.201 MAST[VFHM39F]

(M5020730) マスト

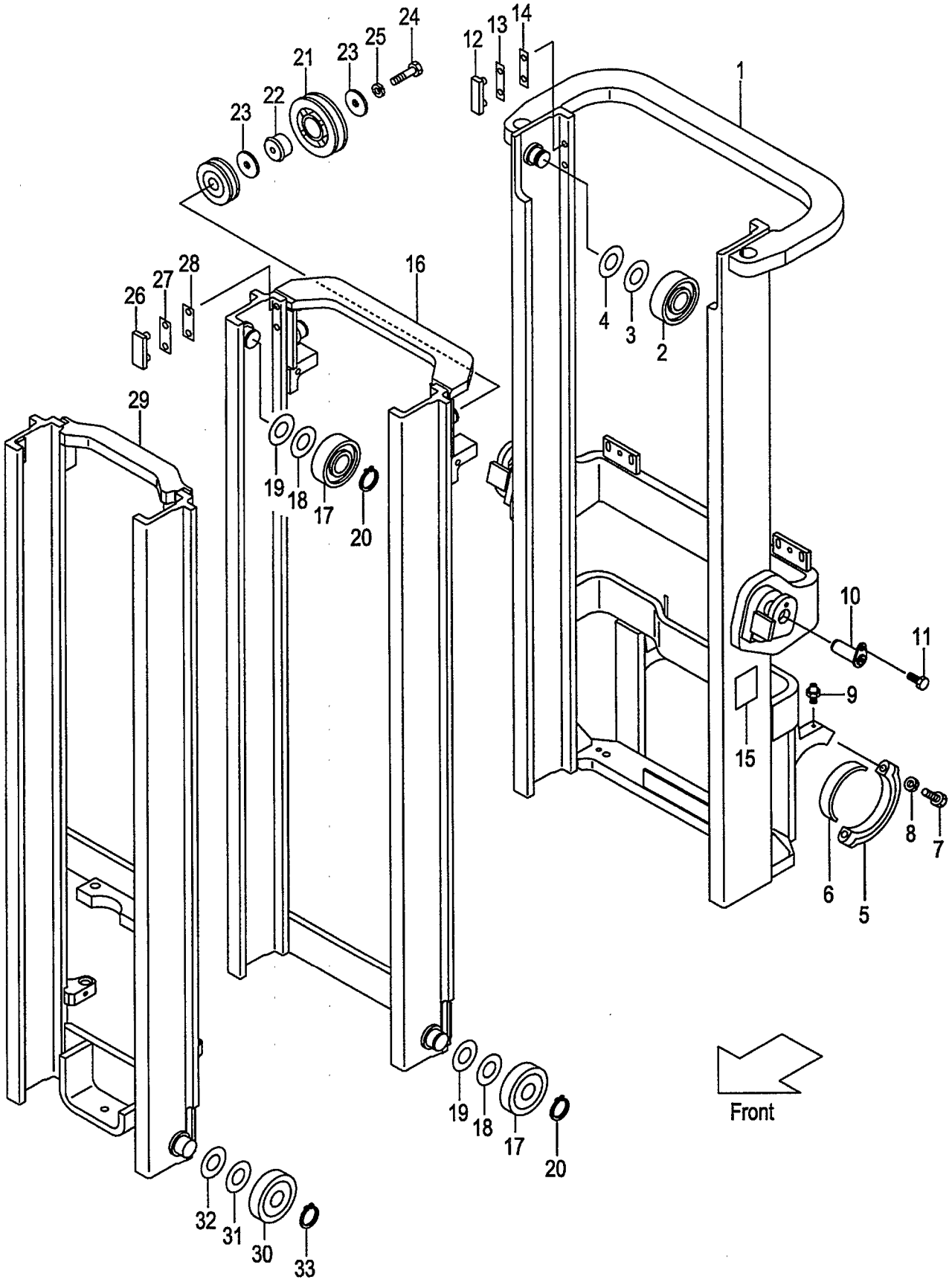

A:VFHM39F

Item No	Part No.	Mark	Description	Req'd	Remarks : Serial No.
1	239F0-70211		MAST,OUTER VFHM360 アウタマスト	1	
-	239F0-70221		MAST,OUTER VFHM400 アウタマスト	1	
-	239F0-70201		MAST,OUTER VFHM435 アウタマスト	1	
-	239F0-70231		MAST,OUTER VFHM480 アウタマスト	1	
-	239F0-70241		MAST,OUTER VFHM500 アウタマスト	1	
-	239F0-70251		MAST,OUTER VFHM540 アウタマスト	1	
-	239F0-70261		MAST,OUTER VFHM550 アウタマスト	1	
-	239F0-70271		MAST,OUTER VFHM600 アウタマスト	1	
-	239F0-70281		MAST,OUTER VFHM650 アウタマスト	1	
-	239F0-70291		MAST,OUTER VFHM700 アウタマスト	1	
-	239F0-70301		MAST,OUTER VFHM750 アウタマスト	1	
-	539F3-91411		MAST,OUTER VFHM360 アウタマスト	1	[EXR][RW][HC]
-	539F3-91421		MAST,OUTER VFHM400 アウタマスト	1	[EXR][RW][HC]
-	539F3-91401		MAST,OUTER VFHM435 アウタマスト	1	[EXR][RW][HC]
-	539F3-91431		MAST,OUTER VFHM480 アウタマスト	1	[EXR][RW][HC]
-	539F3-91441		MAST,OUTER VFHM500 アウタマスト	1	[EXR][RW][HC]
-	539F3-91451		MAST,OUTER VFHM540 アウタマスト	1	[EXR][RW][HC]
-	539F3-91461		MAST,OUTER VFHM550 アウタマスト	1	[EXR][RW][HC]
-	539F3-91471		MAST,OUTER VFHM600 アウタマスト	1	[EXR][RW][HC]
-	539F3-91481		MAST,OUTER VFHM650 アウタマスト	1	[EXR][RW][HC]
-	539F3-91491		MAST,OUTER VFHM700 アウタマスト	1	[EXR][RW][HC]
-	539F3-91501		MAST,OUTER VFHM750 アウタマスト	1	[EXR][RW][HC]
2	277P8-22051		ROLLER,END ローラ	2	
-	577P3-74001		ROLLER,END ローラ	2	[FC][CS35][FCS35][FCS45] [FCS55]
3	277P8-22071		SHIM,T-0.5 シム	12	
4	277P8-22081		SHIM,T-1.0 シム	12	
5	277P8-32701		CAP,MAST-SUPPORT キャップ	2	
6	214A8-02201		BUSHING ブッシング	2	
7	01103-16065		BOLT ボルト	4	
8	02011-00016		WASHER ワッシャ	4	
9	04901-00100		FITTING フィッティング	2	
10	272K8-52201		PIN ピン	2	
11	216G8-52301		BOLT & WASHER ボルト&ワッシャ	2	
12	216G8-33401		SLIPPER スリッパ	2	
13	216G8-33361		SHIM,T-0.5 シム	8	
14	216G8-33371		SHIM,T-1.0 シム	4	
15	23678-06002		PLATE,NAME プレート	1	
16	277T0-70411		MAST,MIDDLE VFHM360 ミドルマスト	1	
-	277T0-70421		MAST,MIDDLE VFHM400 ミドルマスト	1	
-	277T0-70401		MAST,MIDDLE VFHM435 ミドルマスト	1	
-	277T0-70431		MAST,MIDDLE VFHM480 ミドルマスト	1	
-	277T0-70441		MAST,MIDDLE VFHM500 ミドルマスト	1	
-	277T0-70451		MAST,MIDDLE VFHM540 ミドルマスト	1	
-	277T0-70461		MAST,MIDDLE VFHM550 ミドルマスト	1	
-	277T0-70471		MAST,MIDDLE VFHM600 ミドルマスト	1	
-	277T0-70481		MAST,MIDDLE VFHM650 ミドルマスト	1	
-	277T0-70491		MAST,MIDDLE VFHM700 ミドルマスト	1	
-	277T0-70501		MAST,MIDDLE VFHM750 ミドルマスト	1	

FIG.201 MAST[VFHM39F]

(M5020730) マスト

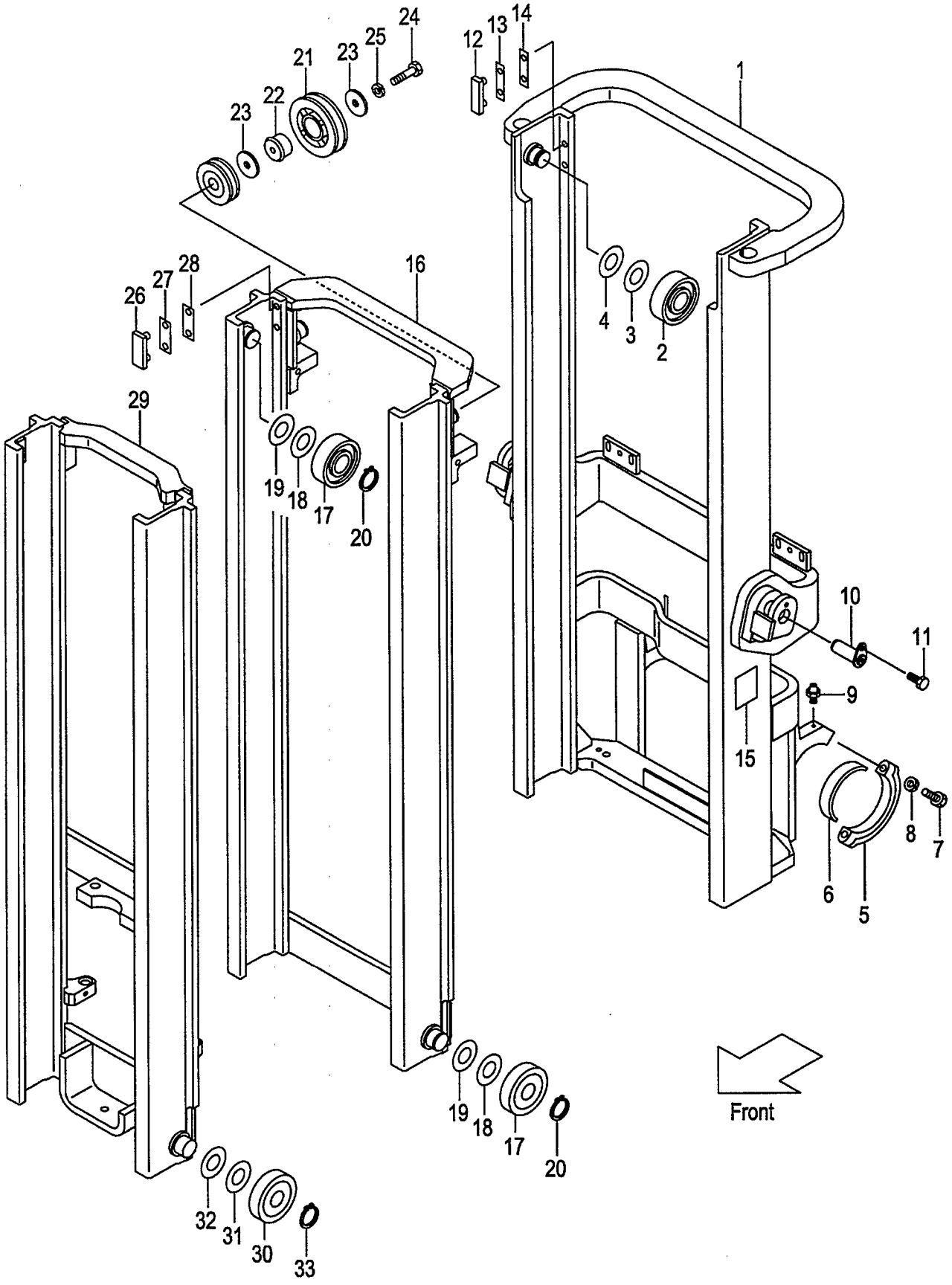

A:VFHM39F

Item No	Part No.	Mark	Description		Req'd	Remarks : Serial No.
17	277P8-22051		ROLLER,END	ﾛｰﾗ	4	
-	277P8-22061		ROLLER,END	ﾛｰﾗ	(2)	
-	577P3-74001		ROLLER,END	ﾛｰﾗ	4	[FC][CS35][FCS35][FCS45] [FCS55]
-	577P3-74011		ROLLER,END	ﾛｰﾗ	(2)	[FC][CS35][FCS35][FCS45] [FCS55]
18	277P8-22071		SHIM,T-0.5	ｼﾑ	15	
19	277P8-22081		SHIM,T-1.0	ｼﾑ	15	
20	09192-30044		RING,SNAP	ｽﾅｯﾌﾟﾘﾝｸﾞ	4	
21	23670-73581		PULLEY	ﾌﾟｰﾘ	1	
22	23200-72211		BRACKET	ﾌﾞﾗｹｯﾄ	1	
23	23200-72221		WASHER	ﾜｯｼｬ	2	
24	01100-16055		BOLT	ﾎﾞﾙﾄ	1	
25	02010-00016		WASHER	ﾜｯｼｬ	1	
26	216G8-33351		SLIPPER	ｽﾘｯﾊﾟ	2	
27	216G8-33361		SHIM,T-0.5	ｼﾑ	4	
28	216G8-33371		SHIM,T-1.0	ｼﾑ	8	
29	277W0-70612		MAST,INNER VFHM360	ｲﾝﾅﾏｽﾄ	1	
-	277W0-70622		MAST,INNER VFHM400	ｲﾝﾅﾏｽﾄ	1	
-	277W0-70602		MAST,INNER VFHM435	ｲﾝﾅﾏｽﾄ	1	
-	277W0-70632		MAST,INNER VFHM480	ｲﾝﾅﾏｽﾄ	1	
-	277W0-70642		MAST,INNER VFHM500	ｲﾝﾅﾏｽﾄ	1	
-	277W0-70652		MAST,INNER VFHM540	ｲﾝﾅﾏｽﾄ	1	
-	277W0-70662		MAST,INNER VFHM550	ｲﾝﾅﾏｽﾄ	1	
-	277W0-70672		MAST,INNER VFHM600	ｲﾝﾅﾏｽﾄ	1	
-	277W0-70682		MAST,INNER VFHM650	ｲﾝﾅﾏｽﾄ	1	
-	277W0-70692		MAST,INNER VFHM700	ｲﾝﾅﾏｽﾄ	1	
-	277W0-70702		MAST,INNER VFHM750	ｲﾝﾅﾏｽﾄ	1	
30	277P8-22051		ROLLER,END	ﾛｰﾗ	2	
-	277P8-22061		ROLLER,END	ﾛｰﾗ	(2)	
-	577P3-74001		ROLLER,END	ﾛｰﾗ	2	[FC][CS35][FCS35][FCS45] [FCS55]
-	577P3-74011		ROLLER,END	ﾛｰﾗ	(2)	[FC][CS35][FCS35][FCS45] [FCS55]
31	277P8-22071		SHIM,T-0.5	ｼﾑ	12	
32	277P8-22081		SHIM,T-1.0	ｼﾑ	12	
33	09192-30044		RING,SNAP	ｽﾅｯﾌﾟﾘﾝｸﾞ	2	

FIG.202 TILT GAUGE[VFHM39F/(TG,PPC,PR,PRC,MPC)]

(M5020740) ﾃｨﾙﾄｹﾞｰｼﾞ

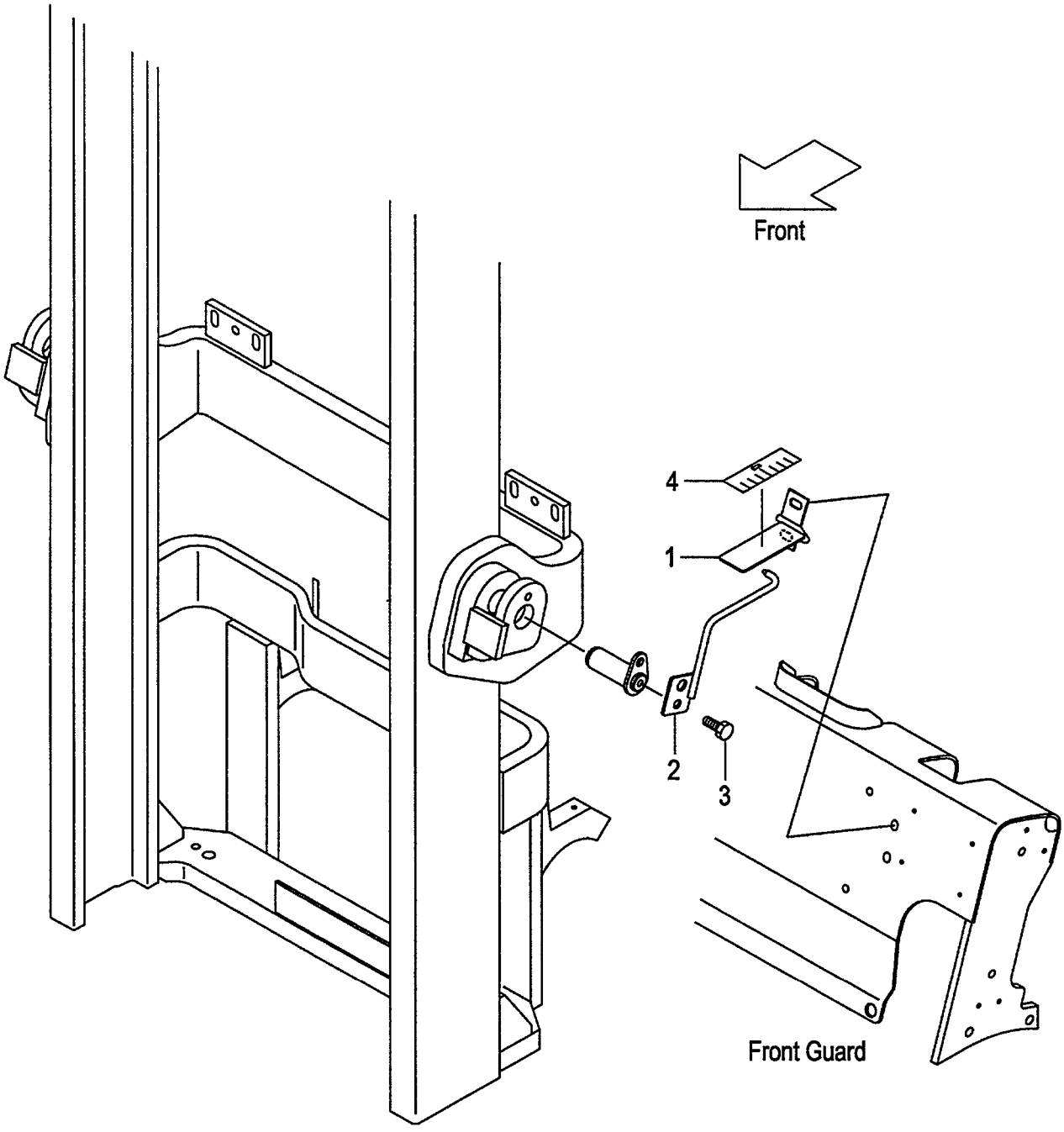

A:VFHM39F

Item No	Part No.	Mark	Description		Req'd	Remarks : Serial No.
1	639A0-10011		GAUGE,TILT	ｹﾞｰｼﾞ	1	[TG][PPC][PR][PRC][MPC]
2	639A0-10051		INDICATOR	ｲﾝｼﾞｹｰﾀ	1	[TG][PPC][PR][PRC][MPC]
3	216G4-12251		BOLT	ﾎﾞﾙﾄ	1	[TG][PPC][PR][PRC][MPC]
4	62459-23371		SEAL,GAUGE	ｼｰﾙ	1	[TG][PPC][PR][PRC][MPC]

FIG.203 LIFT CYLINDER(FRONT)[VFHM39F]

(M5020840) リフトシリンダ(フロント)

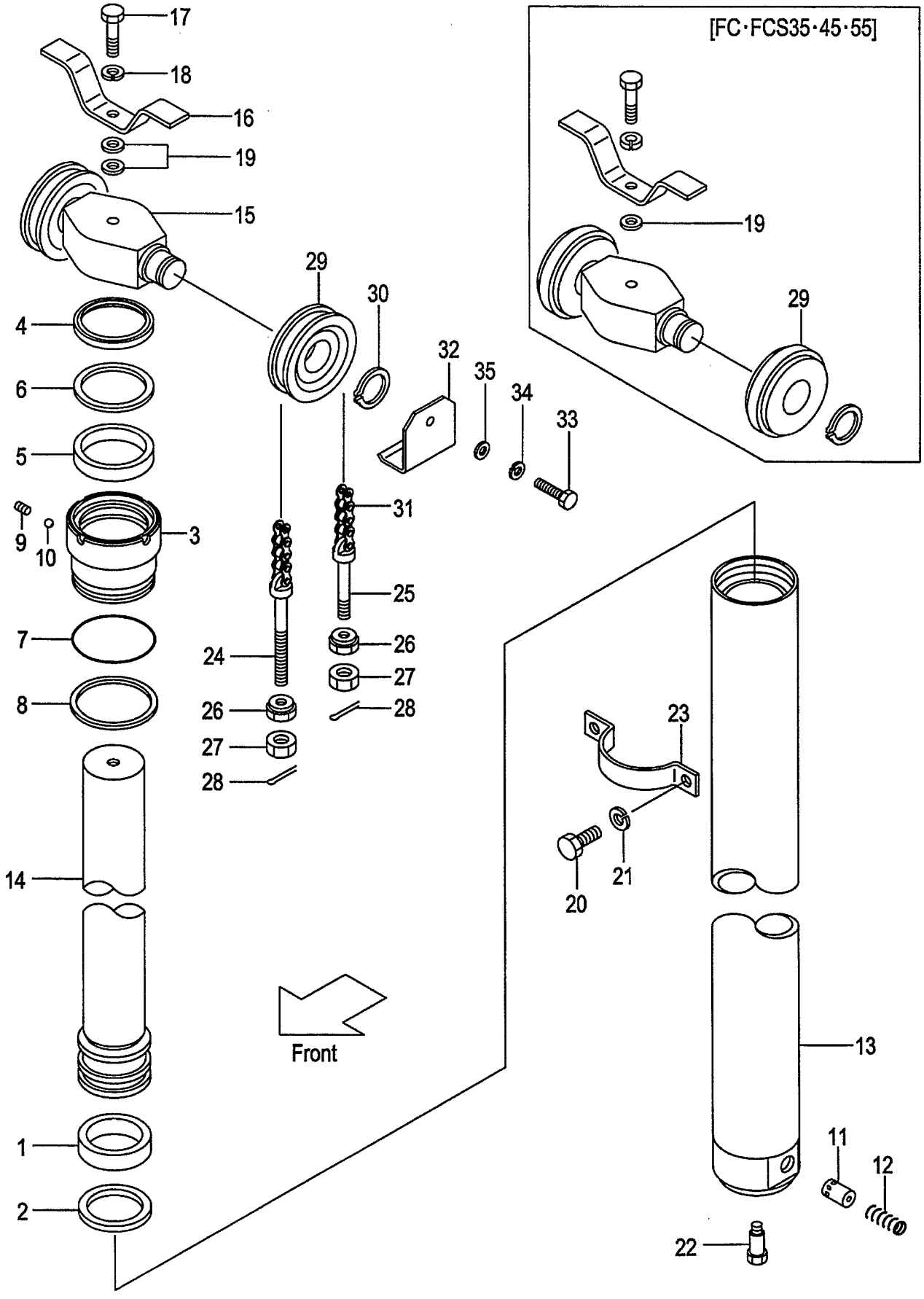

A:VFHM39F

Item No	Part No.	Mark	Description	Req'd	Remarks : Serial No.
A1	277T0-80011		CYL-ASSY,LIFT VFHM360 ﾘﾌﾄｼﾘﾝﾀﾞｱｯｾﾝ	1	INC.1-14
-	277T0-80021		CYL-ASSY,LIFT VFHM400 ﾘﾌﾄｼﾘﾝﾀﾞｱｯｾﾝ	1	INC.1-14
-	277T0-80001		CYL-ASSY,LIFT VFHM435 ﾘﾌﾄｼﾘﾝﾀﾞｱｯｾﾝ	1	INC.1-14
-	277T0-80031		CYL-ASSY,LIFT VFHM480 ﾘﾌﾄｼﾘﾝﾀﾞｱｯｾﾝ	1	INC.1-14
-	277T0-80041		CYL-ASSY,LIFT VFHM500 ﾘﾌﾄｼﾘﾝﾀﾞｱｯｾﾝ	1	INC.1-14
-	277T0-80051		CYL-ASSY,LIFT VFHM540 ﾘﾌﾄｼﾘﾝﾀﾞｱｯｾﾝ	1	INC.1-14
-	277T0-80061		CYL-ASSY,LIFT VFHM550 ﾘﾌﾄｼﾘﾝﾀﾞｱｯｾﾝ	1	INC.1-14
-	277T0-80071		CYL-ASSY,LIFT VFHM600 ﾘﾌﾄｼﾘﾝﾀﾞｱｯｾﾝ	1	INC.1-14
-	277T0-80081		CYL-ASSY,LIFT VFHM650 ﾘﾌﾄｼﾘﾝﾀﾞｱｯｾﾝ	1	INC.1-14
-	277T0-80091		CYL-ASSY,LIFT VFHM700 ﾘﾌﾄｼﾘﾝﾀﾞｱｯｾﾝ	1	INC.1-14
-	277T0-80101		CYL-ASSY,LIFT VFHM750 ﾘﾌﾄｼﾘﾝﾀﾞｱｯｾﾝ	1	INC.1-14
1	23918-52131	*	WEARING ｳｴｱﾘﾝｸﾞ	1	
2	54458-42011	*	RING,PISTON ﾘﾝｸﾞ	1	
3	277T0-52401		CAP ｷｬｯﾌﾟ	1	
4	24469-42721	*	SEAL,DUST ｼｰﾙ	1	
5	24450-82241	*	PACKING ﾊﾟｯｷﾝｸﾞ	1	
6	24450-82251	*	RING,BACK-UP ﾘﾝｸﾞ	1	
7	03350-00950	*	O-RING Oﾘﾝｸﾞ	1	
8	277T0-52411	*	RING ﾘﾝｸﾞ	1	
9	234A0-52611		PLUG ﾌﾟﾗｸﾞ	1	
10	03190-00006		BALL ﾎﾞｰﾙ	1	
11	229L0-82551		PISTON ﾋﾟｽﾄﾝ	1	
12	24389-46021		SPRING ｽﾌﾟﾘﾝｸﾞ	1	
13	277T0-80511		BODY,CYL VFHM360 ﾎﾞﾃﾞｨ	1	
-	277T0-80521		BODY,CYL VFHM400 ﾎﾞﾃﾞｨ	1	
-	277T0-80501		BODY,CYL VFHM435 ﾎﾞﾃﾞｨ	1	
-	277T0-80531		BODY,CYL VFHM480 ﾎﾞﾃﾞｨ	1	
-	277T0-80541		BODY,CYL VFHM500 ﾎﾞﾃﾞｨ	1	
-	277T0-80551		BODY,CYL VFHM540 ﾎﾞﾃﾞｨ	1	
-	277T0-80561		BODY,CYL VFHM550 ﾎﾞﾃﾞｨ	1	
-	277T0-80571		BODY,CYL VFHM600 ﾎﾞﾃﾞｨ	1	
-	277T0-80581		BODY,CYL VFHM650 ﾎﾞﾃﾞｨ	1	
-	277T0-80591		BODY,CYL VFHM700 ﾎﾞﾃﾞｨ	1	
-	277T0-80601		BODY,CYL VFHM750 ﾎﾞﾃﾞｨ	1	
14	277T0-80311		ROD,PISTON VFHM360 ﾛｯﾄﾞ	1	
-	277T0-80321		ROD,PISTON VFHM400 ﾛｯﾄﾞ	1	
-	277T0-80301		ROD,PISTON VFHM435 ﾛｯﾄﾞ	1	
-	277T0-80331		ROD,PISTON VFHM480 ﾛｯﾄﾞ	1	
-	277T0-80341		ROD,PISTON VFHM500 ﾛｯﾄﾞ	1	
-	277T0-80351		ROD,PISTON VFHM540 ﾛｯﾄﾞ	1	
-	277T0-80361		ROD,PISTON VFHM550 ﾛｯﾄﾞ	1	
-	277T0-80371		ROD,PISTON VFHM600 ﾛｯﾄﾞ	1	
-	277T0-80381		ROD,PISTON VFHM650 ﾛｯﾄﾞ	1	
-	277T0-80391		ROD,PISTON VFHM700 ﾛｯﾄﾞ	1	
-	277T0-80401		ROD,PISTON VFHM750 ﾛｯﾄﾞ	1	
15	277P0-82501		HEAD,PISTON ﾍｯﾄﾞ	1	
16	214A0-82681		STOPPER ｽﾄｯﾊﾟ	1	
17	01100-16075		BOLT ﾎﾞﾙﾄ	1	
18	02010-00016		WASHER ﾜｯｼｬ	1	

FIG.203 LIFT CYLINDER(FRONT)[VFHM39F]

(M5020840) リフトシリンダ(フロント)

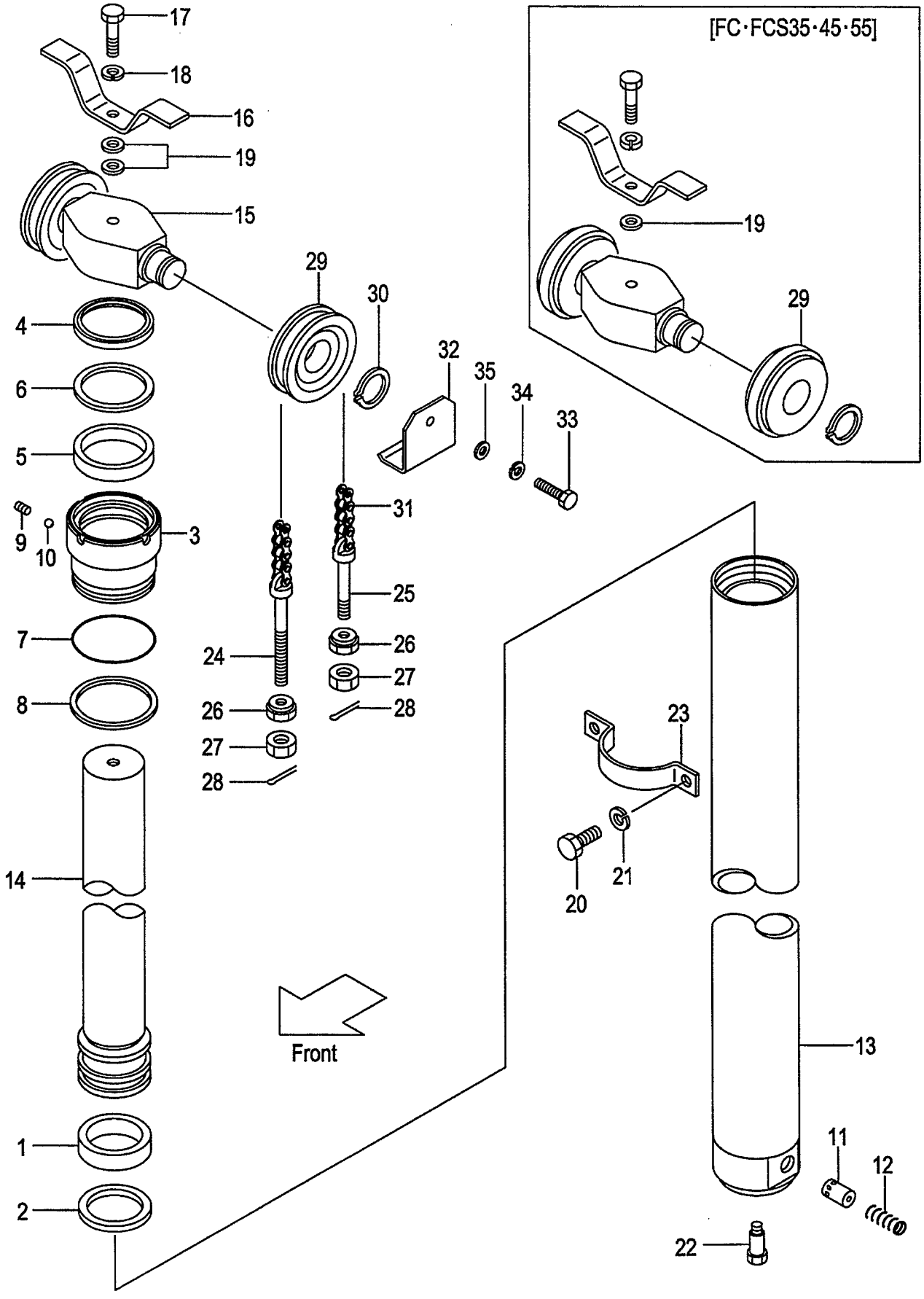

A:VFHM39F

Item No	Part No.	Mark	Description		Req'd	Remarks : Serial No.
19	02000-00016		WASHER	ﾜｯｼｬ	2	
-	02000-00016		WASHER	ﾜｯｼｬ	1	[FC][FCS35][FCS55][FCS45]
20	01103-10020		BOLT	ﾎﾞﾙﾄ	2	
21	02011-00010		WASHER	ﾜｯｼｬ	2	
22	214A0-82831		BOLT	ﾎﾞﾙﾄ	1	
23	214J0-82411		SUPPORT	ｻﾎﾟｰﾄ	1	
24	24459-42391		PIN,ANCHOR	ﾋﾟﾝ	2	
-	231A0-82001		PIN,ANCHOR	ﾋﾟﾝ	2	[FC][FCS35][FCS55][FCS45]
25	24459-42381		PIN,ANCHOR	ﾋﾟﾝ	2	
-	22218-42111		PIN,ANCHOR	ﾋﾟﾝ	2	[FC][FCS35][FCS55][FCS45]
26	22218-40191		NUT	ﾅｯﾄ	4	
27	01400-00018		NUT	ﾅｯﾄ	4	
28	02200-03030		PIN	ﾋﾟﾝ	4	
29	234A8-43501		SHEAVE	ｼｰﾌﾞ	2	
-	22208-40031		SHEAVE	ｼｰﾌﾞ	2	[FC][FCS35][FCS55][FCS45]
30	02100-00040		RING,SNAP	ｽﾅｯﾌﾟﾘﾝｸﾞ	2	
31	22438-45491		CHAIN VFHM360	ﾁｪｰﾝ	2	
-	22438-45551		CHAIN VFHM400	ﾁｪｰﾝ	2	
-	22438-45591		CHAIN VFHM435	ﾁｪｰﾝ	2	
-	22438-45651		CHAIN VFHM480	ﾁｪｰﾝ	2	
-	22438-45691		CHAIN VFHM500	ﾁｪｰﾝ	2	
-	22438-45751		CHAIN VFHM540	ﾁｪｰﾝ	2	
-	22438-45751		CHAIN VFHM550	ﾁｪｰﾝ	2	
-	22438-45831		CHAIN VFHM600	ﾁｪｰﾝ	2	
-	22438-45911		CHAIN VFHM650	ﾁｪｰﾝ	2	
-	22438-46011		CHAIN VFHM700	ﾁｪｰﾝ	2	
-	22438-46071		CHAIN VFHM750	ﾁｪｰﾝ	2	
-	09001-10039		CHAIN VFHM360	ﾁｪｰﾝ	2	[FC][FCS35][FCS55][FCS45]
-	09001-10043		CHAIN VFHM400	ﾁｪｰﾝ	2	[FC][FCS35][FCS55][FCS45]
-	09001-10047		CHAIN VFHM435	ﾁｪｰﾝ	2	[FC][FCS35][FCS55][FCS45]
-	09001-10053		CHAIN VFHM480	ﾁｪｰﾝ	2	[FC][FCS35][FCS55][FCS45]
-	09001-10055		CHAIN VFHM500	ﾁｪｰﾝ	2	[FC][FCS35][FCS55][FCS45]
-	09001-10059		CHAIN VFHM540	ﾁｪｰﾝ	2	[FC][FCS35][FCS55][FCS45]
-	09001-10061		CHAIN VFHM550	ﾁｪｰﾝ	2	[FC][FCS35][FCS55][FCS45]
-	09001-10067		CHAIN VFHM600	ﾁｪｰﾝ	2	[FC][FCS35][FCS55][FCS45]
-	09001-10073		CHAIN VFHM650	ﾁｪｰﾝ	2	[FC][FCS35][FCS55][FCS45]
-	09001-10081		CHAIN VFHM700	ﾁｪｰﾝ	2	[FC][FCS35][FCS55][FCS45]
-	09001-10085		CHAIN VFHM750	ﾁｪｰﾝ	2	[FC][FCS35][FCS55][FCS45]
32	534A3-04001		COVER	ｶﾊﾞｰ	2	[EXE][EXN]
33	01100-16016		BOLT	ﾎﾞﾙﾄ	2	[EXE][EXN]
34	02010-00016		WASHER	ﾜｯｼｬ	2	[EXE][EXN]
35	02000-00016		WASHER	ﾜｯｼｬ	2	[EXE][EXN]
K1	277T0-59801		KIT,OVERHAUL	ｵｰﾊﾞｰﾎｰﾙｷｯﾄ	1	INC.1,2,4-8

FIG.204 LIFT CYLINDER (REAR)[VFHM39F]

(M5020850) リフトシリンダ(リヤー)

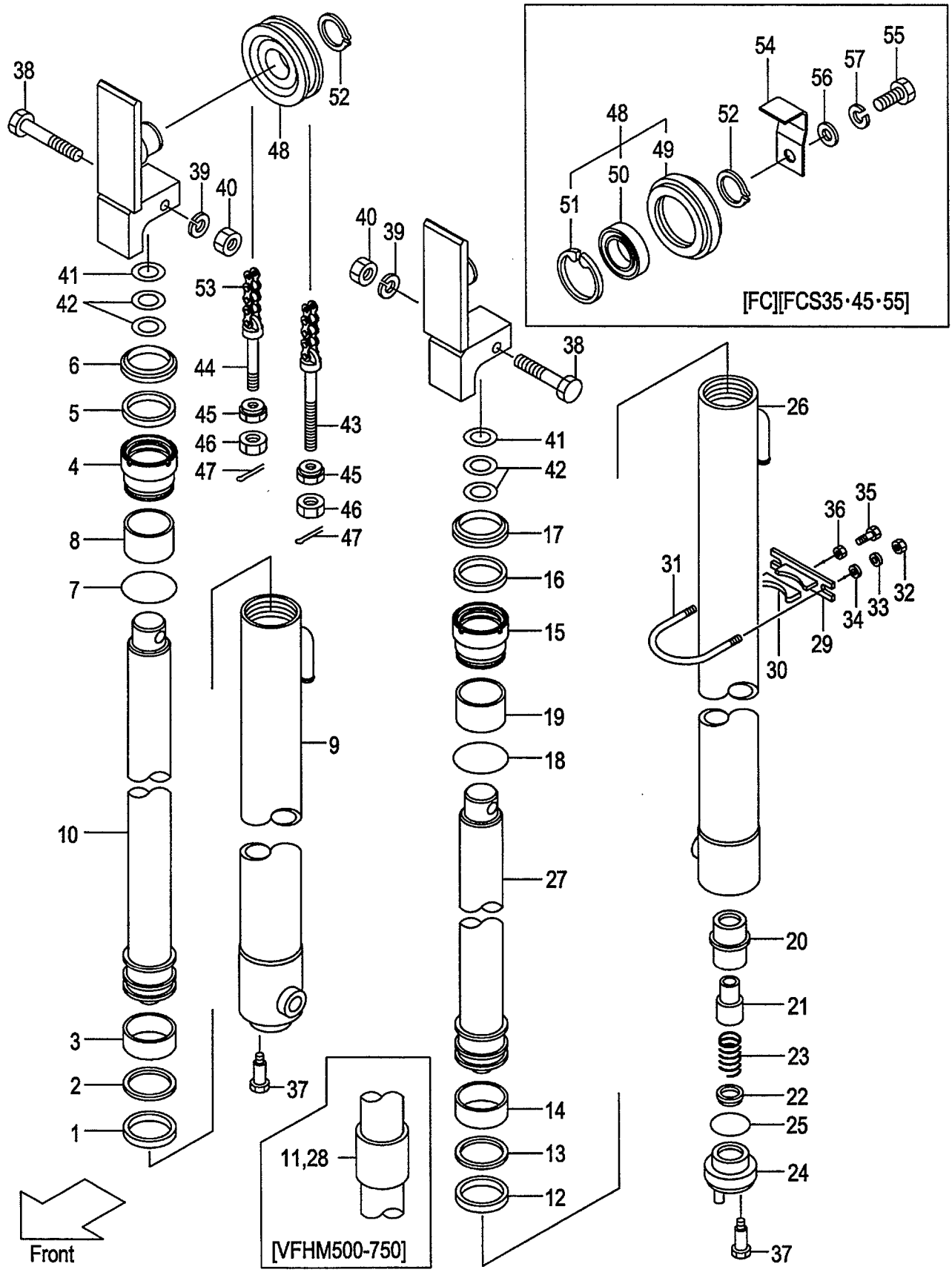

A:VFHM39F

Item No	Part No.	Mark	Description	Req'd	Remarks : Serial No.
A1	277T0-81612		CYL-ASSY,LIFT,RH VFHM360 リフトシリンダアッセン	1	INC.1-10
-	277T0-81622		CYL-ASSY,LIFT,RH VFHM400 リフトシリンダアッセン	1	INC.1-10
-	277T0-81602		CYL-ASSY,LIFT,RH VFHM435 リフトシリンダアッセン	1	INC.1-10
-	277T0-81632		CYL-ASSY,LIFT,RH VFHM480 リフトシリンダアッセン	1	INC.1-10
-	277T0-81642		CYL-ASSY,LIFT,RH VFHM500 リフトシリンダアッセン	1	INC.1-11
-	277T0-81652		CYL-ASSY,LIFT,RH VFHM540 リフトシリンダアッセン	1	INC.1-11
-	277T0-81662		CYL-ASSY,LIFT,RH VFHM550 リフトシリンダアッセン	1	INC.1-11
-	277T0-81672		CYL-ASSY,LIFT,RH VFHM600 リフトシリンダアッセン	1	INC.1-11
-	277T0-81682		CYL-ASSY,LIFT,RH VFHM650 リフトシリンダアッセン	1	INC.1-11
-	277T0-81692		CYL-ASSY,LIFT,RH VFHM700 リフトシリンダアッセン	1	INC.1-11
-	277T0-81702		CYL-ASSY,LIFT,RH VFHM750 リフトシリンダアッセン	1	INC.1-11
1	27978-42411	*	PACKING パッキング	1	
2	24459-42291	*	RING,BACK-UP リング	1	
3	27978-42421	*	WEARING ウエアリング	1	
4	232L8-42601		CAP,CYL キャップ	1	
5	214J8-42721	*	PACKING パッキング	1	
6	214J8-46001	*	SEAL,DUST シール	1	
7	232L8-42631	*	O-RING Oリング	1	
8	232L8-42621		BUSHING ブッシング	1	
9	277T0-81012		TUBE,CYL,RH VFHM360 チューブ	1	
-	277T0-81022		TUBE,CYL,RH VFHM400 チューブ	1	
-	277T0-81002		TUBE,CYL,RH VFHM435 チューブ	1	
-	277T0-81032		TUBE,CYL,RH VFHM480 チューブ	1	
-	277T0-81042		TUBE,CYL,RH VFHM500 チューブ	1	
-	277T0-81052		TUBE,CYL,RH VFHM540 チューブ	1	
-	277T0-81062		TUBE,CYL,RH VFHM550 チューブ	1	
-	277T0-81072		TUBE,CYL,RH VFHM600 チューブ	1	
-	277T0-81082		TUBE,CYL,RH VFHM650 チューブ	1	
-	277T0-81092		TUBE,CYL,RH VFHM700 チューブ	1	
-	277T0-81102		TUBE,CYL,RH VFHM750 チューブ	1	
10	277T0-81411		ROD,PISTON VFHM360 ロッド	1	
-	277T0-81421		ROD,PISTON VFHM400 ロッド	1	
-	277T0-81401		ROD,PISTON VFHM435 ロッド	1	
-	277T0-81431		ROD,PISTON VFHM480 ロッド	1	
-	277T0-81441		ROD,PISTON VFHM500 ロッド	1	
-	277T0-81451		ROD,PISTON VFHM540 ロッド	1	
-	277T0-81461		ROD,PISTON VFHM550 ロッド	1	
-	277T0-81471		ROD,PISTON VFHM600 ロッド	1	
-	277T0-81481		ROD,PISTON VFHM650 ロッド	1	

FIG.204 LIFT CYLINDER (REAR)[VFHM39F]

(M5020850) リフトシリンダ(リヤー)

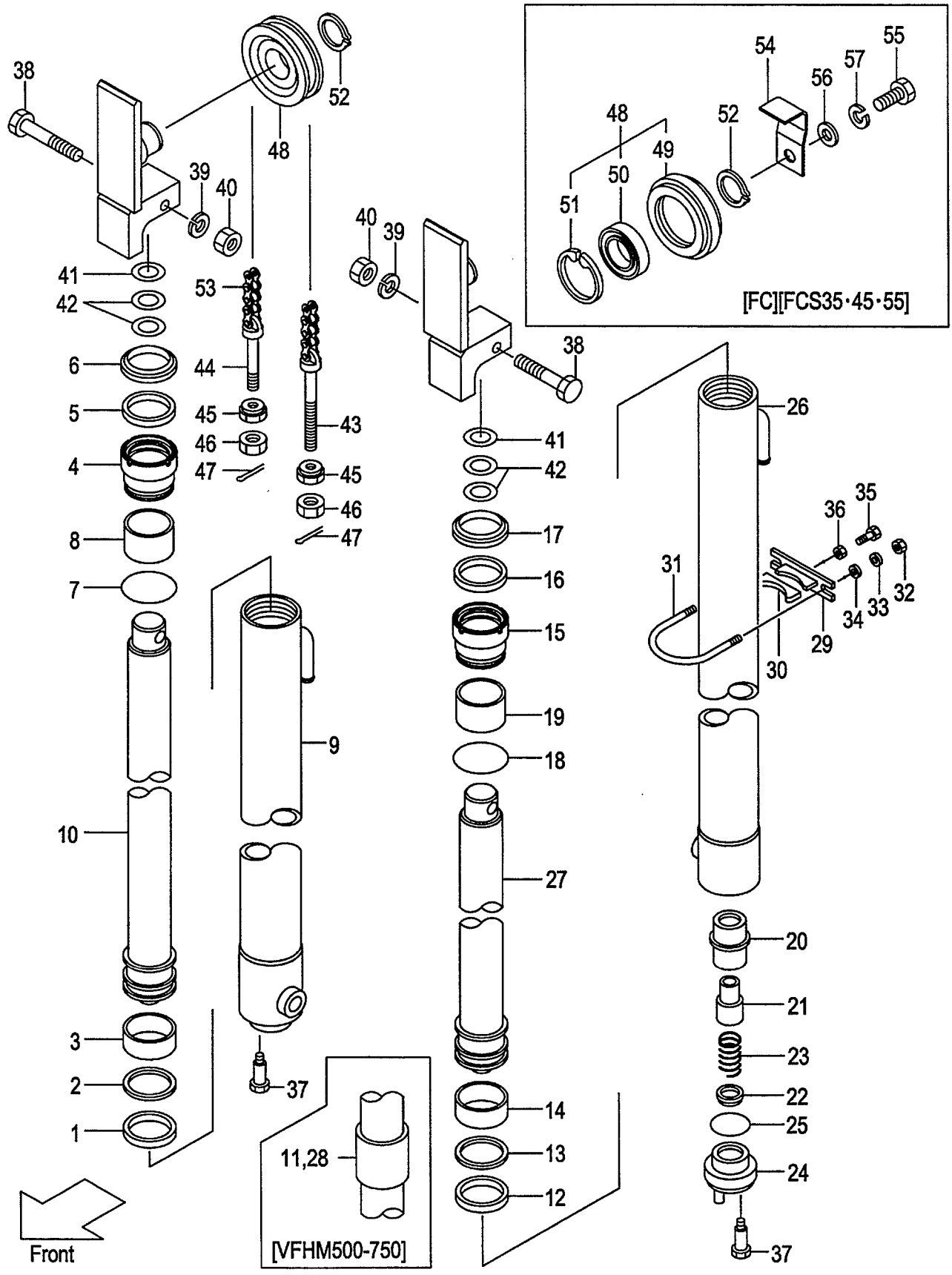

A:VFHM39F

Item No	Part No.	Mark	Description	Req'd	Remarks : Serial No.
-	277T0-81491		ROD,PISTON VFHM700 ﾛｯﾄﾞ	1	
-	277T0-81501		ROD,PISTON VFHM750 ﾛｯﾄﾞ	1	
11	27978-42371		SPACER VFHM500 ｽﾍﾟｰｻ	1	
-	27980-82701		SPACER VFHM540 ｽﾍﾟｰｻ	1	
-	27978-42371		SPACER VFHM550 ｽﾍﾟｰｻ	1	
-	27980-82711		SPACER VFHM600 ｽﾍﾟｰｻ	1	
-	234F0-82401		SPACER VFHM650 ｽﾍﾟｰｻ	1	
-	214J0-82521		SPACER VFHM700 ｽﾍﾟｰｻ	1	
-	214J0-82521		SPACER VFHM750 ｽﾍﾟｰｻ	1	
A2	277T0-81812		CYL-ASSY,LIFT,LH VFHM360 ﾘﾌﾄｼﾘﾝﾀﾞｱｯｾﾝ	1	INC.12-27
-	277T0-81822		CYL-ASSY,LIFT,LH VFHM400 ﾘﾌﾄｼﾘﾝﾀﾞｱｯｾﾝ	1	INC.12-27
-	277T0-81802		CYL-ASSY,LIFT,LH VFHM435 ﾘﾌﾄｼﾘﾝﾀﾞｱｯｾﾝ	1	INC.12-27
-	277T0-81832		CYL-ASSY,LIFT,LH VFHM480 ﾘﾌﾄｼﾘﾝﾀﾞｱｯｾﾝ	1	INC.12-27
-	277T0-81842		CYL-ASSY,LIFT,LH VFHM500 ﾘﾌﾄｼﾘﾝﾀﾞｱｯｾﾝ	1	INC.12-28
-	277T0-81852		CYL-ASSY,LIFT,LH VFHM540 ﾘﾌﾄｼﾘﾝﾀﾞｱｯｾﾝ	1	INC.12-28
-	277T0-81862		CYL-ASSY,LIFT,LH VFHM550 ﾘﾌﾄｼﾘﾝﾀﾞｱｯｾﾝ	1	INC.12-28
-	277T0-81872		CYL-ASSY,LIFT,LH VFHM600 ﾘﾌﾄｼﾘﾝﾀﾞｱｯｾﾝ	1	INC.12-28
-	277T0-81882		CYL-ASSY,LIFT,LH VFHM650 ﾘﾌﾄｼﾘﾝﾀﾞｱｯｾﾝ	1	INC.12-28
-	277T0-81892		CYL-ASSY,LIFT,LH VFHM700 ﾘﾌﾄｼﾘﾝﾀﾞｱｯｾﾝ	1	INC.12-28
-	277T0-81902		CYL-ASSY,LIFT,LH VFHM750 ﾘﾌﾄｼﾘﾝﾀﾞｱｯｾﾝ	1	INC.12-28
12	27978-42411	*	PACKING ﾊﾟｯｷﾝｸﾞ	1	
13	24459-42291	*	RING,BACK-UP ﾘﾝｸﾞ	1	
14	27978-42421	*	WEARING ｳｴｱﾘﾝｸﾞ	1	
15	232L8-42601		CAP,CYL ｷｬｯﾌﾟ	1	
16	214J8-42721	*	PACKING ﾊﾟｯｷﾝｸﾞ	1	
17	214J8-46001	*	SEAL,DUST ｼｰﾙ	1	
18	232L8-42631	*	O-RING Oﾘﾝｸﾞ	1	
19	232L8-42621		BUSHING ﾌﾞｯｼﾝｸﾞ	1	
20	53658-43021		SLEEVE ｽﾘｰﾌﾞ	1	
21	53658-43011		PISTON ﾋﾟｽﾄﾝ	1	
22	53658-43001		VALVE,CHECK ﾊﾞﾙﾌﾞ	1	
23	53658-43031		SPRING ｽﾌﾟﾘﾝｸﾞ	1	
24	53658-43041		PLUG ﾌﾟﾗｸﾞ	1	
25	03320-00340		O-RING Oﾘﾝｸﾞ	1	
26	277T0-81212		TUBE,CYL,LH VFHM360 ﾁｭｰﾌﾞ	1	
-	277T0-81222		TUBE,CYL,LH VFHM400 ﾁｭｰﾌﾞ	1	
-	277T0-81202		TUBE,CYL,LH VFHM435 ﾁｭｰﾌﾞ	1	
-	277T0-81232		TUBE,CYL,LH VFHM480 ﾁｭｰﾌﾞ	1	
-	277T0-81242		TUBE,CYL,LH VFHM500 ﾁｭｰﾌﾞ	1	

FIG.204 LIFT CYLINDER (REAR)[VFHM39F]

(M5020850) リフトシリンダ(リヤー)

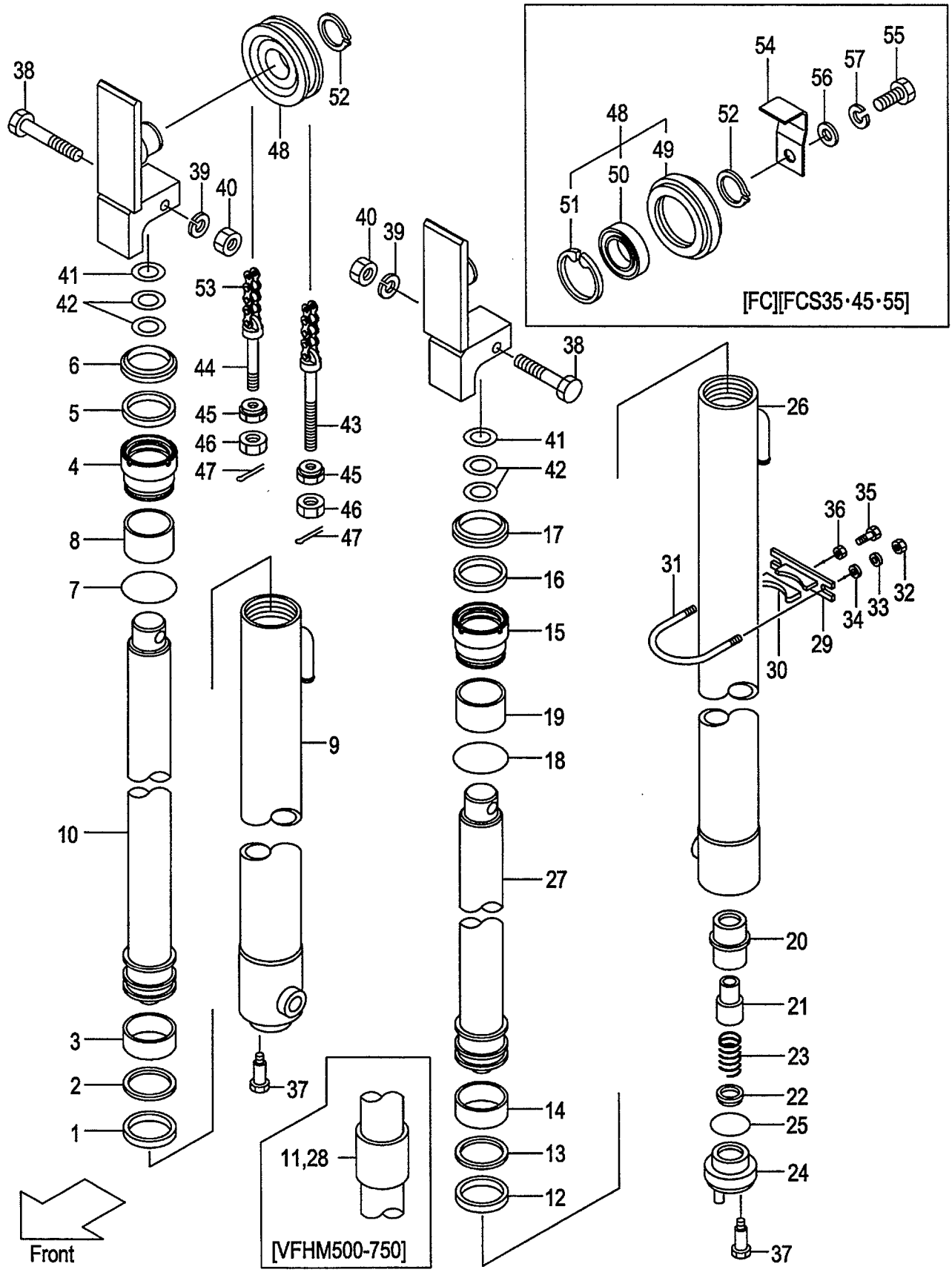

A:VFHM39F

Item No	Part No.	Mark	Description		Req'd	Remarks : Serial No.
-	277T0-81252		TUBE,CYL,LH VFHM540	ﾁｭｰﾌﾞ	1	
-	277T0-81262		TUBE,CYL,LH VFHM550	ﾁｭｰﾌﾞ	1	
-	277T0-81272		TUBE,CYL,LH VFHM600	ﾁｭｰﾌﾞ	1	
-	277T0-81282		TUBE,CYL,LH VFHM650	ﾁｭｰﾌﾞ	1	
-	277T0-81292		TUBE,CYL,LH VFHM700	ﾁｭｰﾌﾞ	1	
-	277T0-81302		TUBE,CYL,LH VFHM750	ﾁｭｰﾌﾞ	1	
27	277T0-81411		ROD,PISTON VFHM360	ﾛｯﾄﾞ	1	
-	277T0-81421		ROD,PISTON VFHM400	ﾛｯﾄﾞ	1	
-	277T0-81401		ROD,PISTON VFHM435	ﾛｯﾄﾞ	1	
-	277T0-81431		ROD,PISTON VFHM480	ﾛｯﾄﾞ	1	
-	277T0-81441		ROD,PISTON VFHM500	ﾛｯﾄﾞ	1	
-	277T0-81451		ROD,PISTON VFHM540	ﾛｯﾄﾞ	1	
-	277T0-81461		ROD,PISTON VFHM550	ﾛｯﾄﾞ	1	
-	277T0-81471		ROD,PISTON VFHM600	ﾛｯﾄﾞ	1	
-	277T0-81481		ROD,PISTON VFHM650	ﾛｯﾄﾞ	1	
-	277T0-81491		ROD,PISTON VFHM700	ﾛｯﾄﾞ	1	
-	277T0-81501		ROD,PISTON VFHM750	ﾛｯﾄﾞ	1	
28	27978-42371		SPACER VFHM500	ｽﾍﾟｰｻ	1	
-	27980-82701		SPACER VFHM540	ｽﾍﾟｰｻ	1	
-	27978-42371		SPACER VFHM550	ｽﾍﾟｰｻ	1	
-	27980-82711		SPACER VFHM600	ｽﾍﾟｰｻ	1	
-	234F0-82401		SPACER VFHM650	ｽﾍﾟｰｻ	1	
-	214J0-82521		SPACER VFHM700	ｽﾍﾟｰｻ	1	
-	214J0-82521		SPACER VFHM750	ｽﾍﾟｰｻ	1	
A3	215E8-42171		SUPPORT-ASSY,CYL	ｼﾘﾝﾀﾞｻﾎﾟｰﾄｱｯｾﾝ	2	(VFHM360-550) INC.29,30
-	215E8-42171		SUPPORT-ASSY,CYL	ｼﾘﾝﾀﾞｻﾎﾟｰﾄｱｯｾﾝ	4	(VFHM600-750) INC.29,30
29	215E8-42181		SUPPORT,CYL	ｻﾎﾟｰﾄ	2	(VFHM360-550)
-	215E8-42181		SUPPORT,CYL	ｻﾎﾟｰﾄ	4	(VFHM600-750)
30	24868-42111		RUBBER	ﾗﾊﾞｰ	2	(VFHM360-550)
-	24868-42111		RUBBER	ﾗﾊﾞｰ	4	(VFHM600-750)
31	234A8-42551		U-BOLT	Uﾎﾞﾙﾄ	2	(VFHM360-550)
-	234A8-42551		U-BOLT	Uﾎﾞﾙﾄ	4	(VFHM600-750)
32	234A8-42561		NUT	ﾅｯﾄ	4	(VFHM360-550)
-	234A8-42561		NUT	ﾅｯﾄ	8	(VFHM600-750)
33	02010-20010		WASHER	ﾜｯｼｬ	4	(VFHM360-550)
-	02010-20010		WASHER	ﾜｯｼｬ	8	(VFHM600-750)
34	02000-20010		WASHER	ﾜｯｼｬ	4	(VFHM360-550)
-	02000-20010		WASHER	ﾜｯｼｬ	8	(VFHM600-750)
35	232A8-42201		BOLT	ﾎﾞﾙﾄ	2	(VFHM360-550)
-	232A8-42201		BOLT	ﾎﾞﾙﾄ	4	(VFHM600-750)
36	234A8-42571		NUT	ﾅｯﾄ	2	(VFHM360-550)
-	234A8-42571		NUT	ﾅｯﾄ	4	(VFHM600-750)
37	214A8-42661		BOLT	ﾎﾞﾙﾄ	2	
38	01100-12070		BOLT	ﾎﾞﾙﾄ	2	
39	02010-00012		WASHER	ﾜｯｼｬ	2	
40	01400-00012		NUT	ﾅｯﾄ	2	
41	23917-42191		SHIM,T-1.0	ｼﾑ	10	
42	22679-43831		SHIM,T-0.2	ｼﾑ	10	
43	24459-42391		PIN,ANCHOR	ﾋﾟﾝ	2	

FIG.204 LIFT CYLINDER (REAR)[VFHM39F]

(M5020850) リフトシリンダ(リヤー)

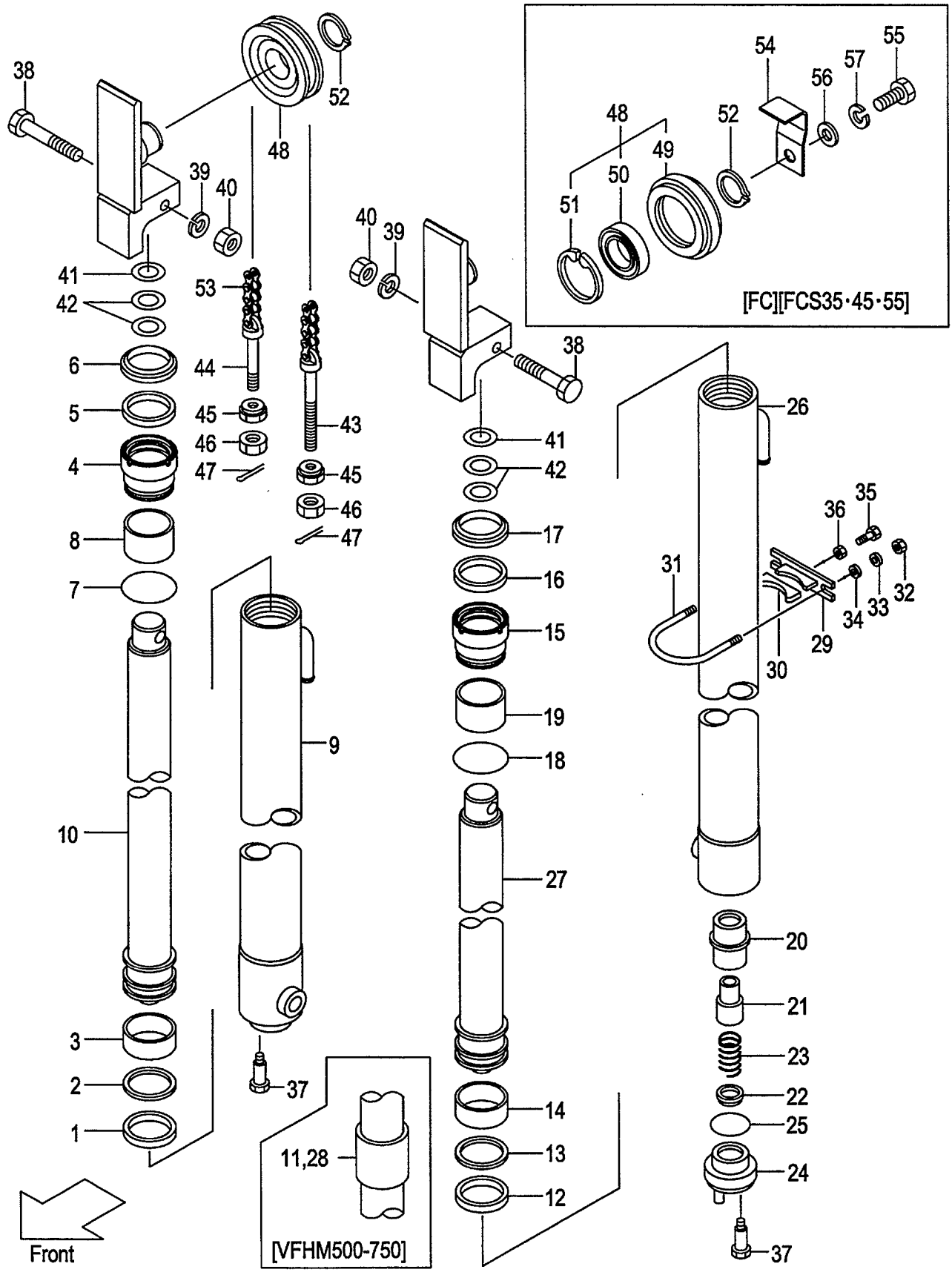

A:VFHM39F

Item No	Part No.	Mark	Description	Req'd	Remarks : Serial No.
-	22218-42111		PIN,ANCHOR ﾋﾟﾝ	2	[FC][FCS35][FCS45][FCS55] [CS35]
44	215K0-82701		PIN,ANCHOR ﾋﾟﾝ	2	
-	23658-42531		PIN,ANCHOR ﾋﾟﾝ	2	[FC][FCS35][FCS45][FCS55] [CS35]
45	22218-40191		NUT ﾅｯﾄ	4	
46	01400-00018		NUT ﾅｯﾄ	4	
47	02200-03030		PIN,COTTER ﾋﾟﾝ	4	
48	277P0-83001		SHEAVE ｼｰﾌﾞ	2	
-	577P3-74021		SHEAVE ｼｰﾌﾞ	2	[FC][FCS35][FCS45][FCS55] [CS35] INC.49-51
49	577P3-74031		BODY,SHEAVE ﾎﾞﾃﾞｨ	2	[FC][FCS35][FCS45][FCS55] [CS35]
50	03042-06308		BEARING ﾍﾞｱﾘﾝｸﾞ	2	[FC][FCS35][FCS45][FCS55] [CS35]
51	02110-00090		RING,SNAP ｽﾅｯﾌﾟﾘﾝｸﾞ	2	[FC][FCS35][FCS45][FCS55] [CS35]
52	02100-00040		RING,SNAP ｽﾅｯﾌﾟﾘﾝｸﾞ	2	
53	22438-45671		CHAIN,LEAF VFHM360 ﾁｪｰﾝ	2	
-	22438-45711		CHAIN,LEAF VFHM400 ﾁｪｰﾝ	2	
-	22438-45751		CHAIN,LEAF VFHM435 ﾁｪｰﾝ	2	
-	22438-45811		CHAIN,LEAF VFHM480 ﾁｪｰﾝ	2	
-	22438-45851		CHAIN,LEAF VFHM500 ﾁｪｰﾝ	2	
-	22438-45911		CHAIN,LEAF VFHM540 ﾁｪｰﾝ	2	
-	22438-45931		CHAIN,LEAF VFHM550 ﾁｪｰﾝ	2	
-	22438-45991		CHAIN,LEAF VFHM600 ﾁｪｰﾝ	2	
-	22438-46071		CHAIN,LEAF VFHM650 ﾁｪｰﾝ	2	
-	22438-46171		CHAIN,LEAF VFHM700 ﾁｪｰﾝ	2	
-	22438-46231		CHAIN,LEAF VFHM750 ﾁｪｰﾝ	2	
-	09001-10053		CHAIN,ROLLER VFHM360 ﾁｪｰﾝ	2	[FC][FCS35][FCS45][FCS55] [CS35]
-	09001-10057		CHAIN,ROLLER VFHM400 ﾁｪｰﾝ	2	[FC][FCS35][FCS45][FCS55] [CS35]
-	09001-10061		CHAIN,ROLLER VFHM435 ﾁｪｰﾝ	2	[FC][FCS35][FCS45][FCS55] [CS35]
-	09001-10065		CHAIN,ROLLER VFHM480 ﾁｪｰﾝ	2	[FC][FCS35][FCS45][FCS55] [CS35]
-	09001-10069		CHAIN,ROLLER VFHM500 ﾁｪｰﾝ	2	[FC][FCS35][FCS45][FCS55] [CS35]
-	09001-10073		CHAIN,ROLLER VFHM540 ﾁｪｰﾝ	2	[FC][FCS35][FCS45][FCS55] [CS35]
-	09001-10075		CHAIN,ROLLER VFHM550 ﾁｪｰﾝ	2	[FC][FCS35][FCS45][FCS55] [CS35]
-	09001-10079		CHAIN,ROLLER VFHM600 ﾁｪｰﾝ	2	[FC][FCS35][FCS45][FCS55] [CS35]
-	09001-10087		CHAIN,ROLLER VFHM650 ﾁｪｰﾝ	2	[FC][FCS35][FCS45][FCS55] [CS35]
-	09001-10093		CHAIN,ROLLER VFHM700 ﾁｪｰﾝ	2	[FC][FCS35][FCS45][FCS55] [CS35]

FIG.204 LIFT CYLINDER (REAR)[VFHM39F]

(M5020850) リフトシリンダ(リヤー)

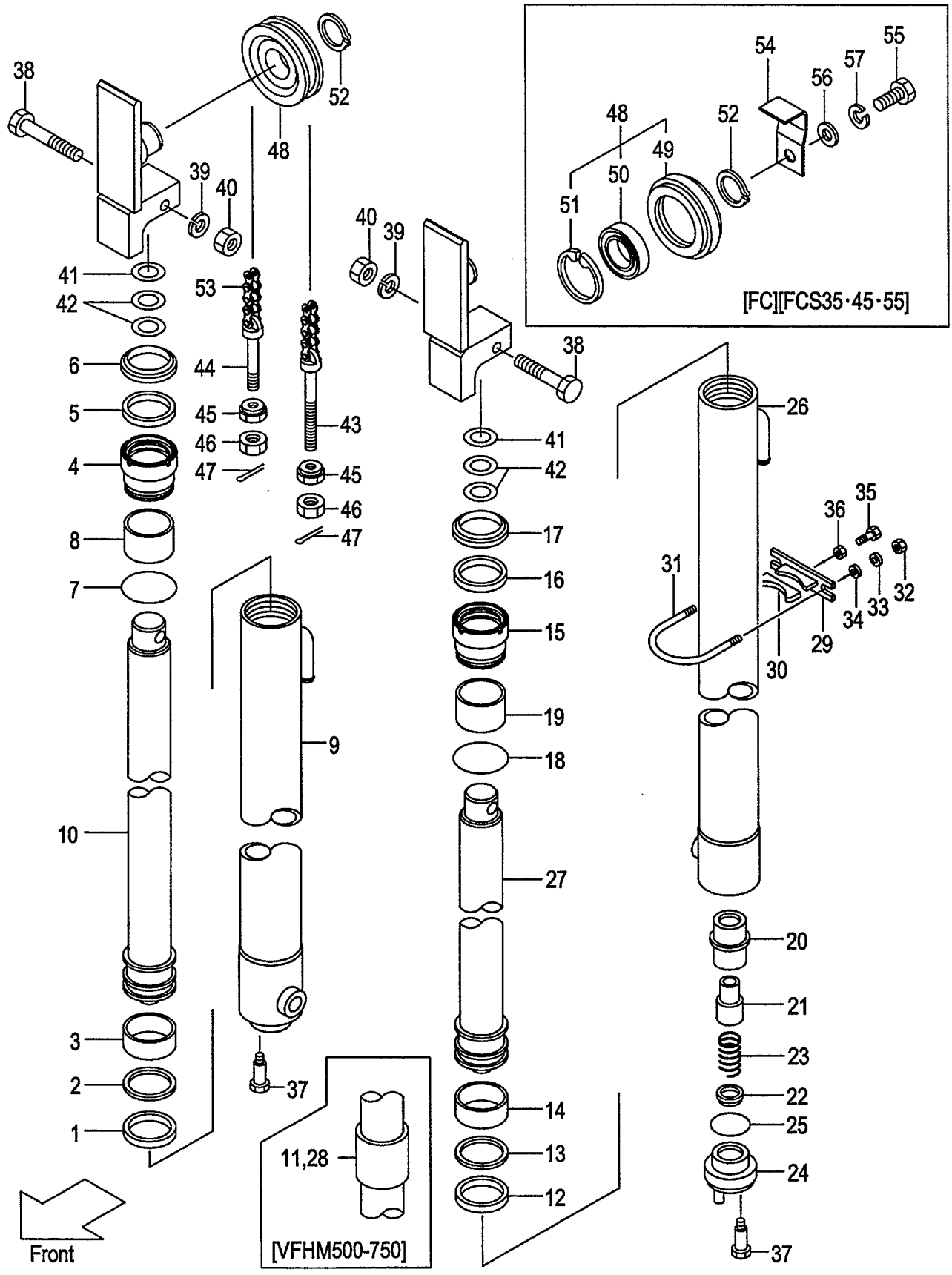

A:VFHM39F

Item No	Part No.	Mark	Description		Req'd	Remarks : Serial No.
-	09001-10099		CHAIN,ROLLER VFHM750	チェーン	2	[FC][FCS35][FCS45][FCS55] [CS35]
54	577T3-74061		STOPPER,CHAIN	ｽﾄｯﾊﾟ	1	[FC][FCS35][FCS45][FCS55] [CS35]
55	01100-16025		BOLT	ﾎﾞﾙﾄ	1	[FC][FCS35][FCS45][FCS55] [CS35]
56	02000-00016		WASHER	ﾜｯｼｬ	1	[FC][FCS35][FCS45][FCS55] [CS35]
57	02010-00016		WASHER	ﾜｯｼｬ	1	[FC][FCS35][FCS45][FCS55] [CS35]
K1	232L8-49801		KIT,OVERHAUL RH	ｵｰﾊﾞｰﾎｰﾙｷｯﾄ	1	INC.1-3,5-7
K2	232L8-49801		KIT,OVERHAUL LH	ｵｰﾊﾞｰﾎｰﾙｷｯﾄ	1	INC.12-14,16-18

FIG.205 MAST PIPING[VFHM39F]

(M5020860) マストパイピング

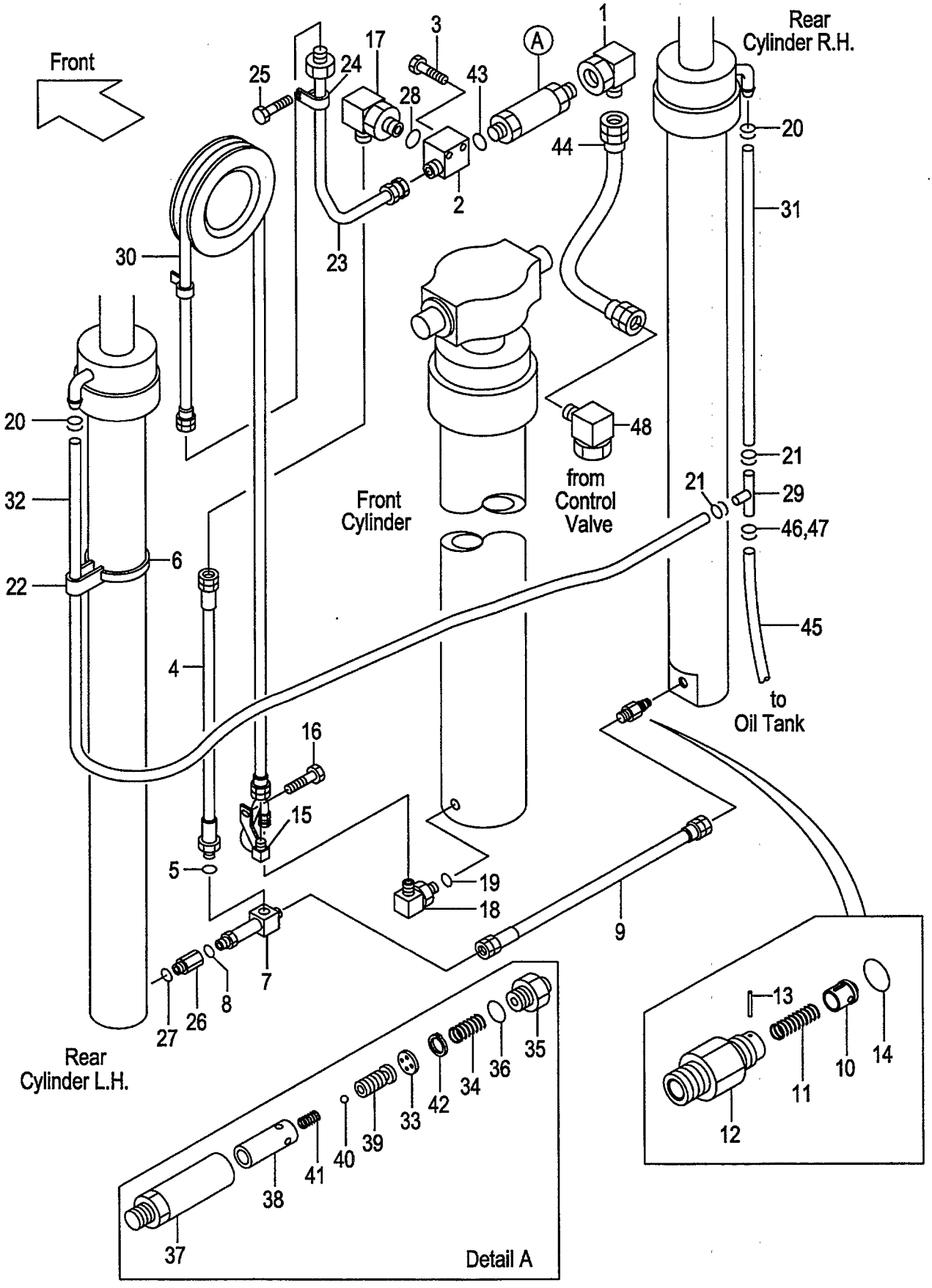

A:VFHM39F

Item No	Part No.	Mark	Description		Req'd	Remarks : Serial No.
1	62150-14321		ELBOW	ｴﾙﾎﾞ	1	
2	277P0-92061		THREE-WAY	ｽﾘｰｳｴｲ	1	
3	01184-10060		BOLT	ﾎﾞﾙﾄ	2	
A1	239F0-92091		HOSE-ASSY	ﾎｰｽｱｯｾﾝ	1	INC.4,5
4	239F0-92141		HOSE	ﾎｰｽ	1	
5	03320-00180		O-RING	Oﾘﾝｸﾞ	1	
6	04913-21380		BAND	ﾊﾞﾝﾄﾞ	2	
A2	234A8-41101		THREE-WAY-ASSY	ｽﾘｰｳｴｲｱｯｾﾝ	1	INC.7,8
7	234A8-43051		THREE-WAY	ｽﾘｰｳｴｲ	1	
8	03320-00140		O-RING	Oﾘﾝｸﾞ	1	
9	277T0-62071		HOSE	ﾎｰｽ	1	
A3	234A8-40701		VALVE-ASSY,CUT	ｶｯﾄﾊﾞﾙﾌﾞｱｯｾﾝ	1	INC.10-14
10	234A8-42602		PISTON	ﾋﾟｽﾄﾝ	1	
11	234A8-42611		SPRING	ｽﾌﾟﾘﾝｸﾞ	1	
12	234A8-42622		NIPPLE	ﾆｯﾌﾟﾙ	1	
13	02270-01014		PIN	ﾋﾟﾝ	1	
14	03320-00140		O-RING	Oﾘﾝｸﾞ	1	
15	277T0-90151		PIPE	ﾊﾟｲﾌﾟ	1	
16	01186-10020		BOLT & WASHER	ﾎﾞﾙﾄ&ﾜｯｼｬ	1	
17	04150-00404		ELBOW	ｴﾙﾎﾞ	1	
A4	229F0-91001		ELBOW-ASSY	ｴﾙﾎﾞｱｯｾﾝ	1	INC.18,19
18	229F0-94001		ELBOW	ｴﾙﾎﾞ	1	
19	03320-00240		O-RING	Oﾘﾝｸﾞ	1	
20	04911-00018		CLIP	ｸﾘｯﾌﾟ	2	
-	24329-46201		CLIP	ｸﾘｯﾌﾟ	2	[FC][RTL]
21	04911-00018		CLIP	ｸﾘｯﾌﾟ	2	
-	04911-00021		CLIP	ｸﾘｯﾌﾟ	2	[FC][RTL]
22	23678-42401		BAND,HOSE	ﾊﾞﾝﾄﾞ	2	
-	53675-54101		BAND,HOSE	ﾊﾞﾝﾄﾞ	2	[FC][RTL]
23	239A0-90161		PIPE	ﾊﾟｲﾌﾟ	1	INC.26
24	23200-62171		CLIP	ｸﾘｯﾌﾟ	1	
25	01183-06016		BOLT & WASHER	ﾎﾞﾙﾄ&ﾜｯｼｬ	2	
26	234A0-62111		ADAPTER	ｱﾀﾞﾌﾟﾀ	1	
27	03320-00140		O-RING	Oﾘﾝｸﾞ	1	
28	03320-00180		O-RING	Oﾘﾝｸﾞ	1	
29	23679-45051		THREE-WAY	ｽﾘｰｳｴｲ	1	
-	53675-55051		THREE-WAY	ｽﾘｰｳｴｲ	1	[FC][RTL]
30	04601-44211		HOSE,SYN VFHM360	ﾎｰｽ	1	
-	04601-44236		HOSE,SYN VFHM400	ﾎｰｽ	1	
-	04601-44261		HOSE,SYN VFHM435	ﾎｰｽ	1	
-	04601-44290		HOSE,SYN VFHM480	ﾎｰｽ	1	
-	04601-44310		HOSE,SYN VFHM500	ﾎｰｽ	1	
-	04601-44335		HOSE,SYN VFHM540	ﾎｰｽ	1	
-	04601-44342		HOSE,SYN VFHM550	ﾎｰｽ	1	
-	04601-44379		HOSE,SYN VFHM600	ﾎｰｽ	1	
-	04601-44421		HOSE,SYN VFHM650	ﾎｰｽ	1	
-	04601-44465		HOSE,SYN VFHM700	ﾎｰｽ	1	
-	04601-44497		HOSE,SYN VFHM750	ﾎｰｽ	1	
31	23678-40080		TUBE,RH VFHM360	ﾁｭｰﾌﾞ	1	
-	23678-40095		TUBE,RH VFHM400	ﾁｭｰﾌﾞ	1	

FIG.205 MAST PIPING[VFHM39F]

(M5020860) マストパイピング

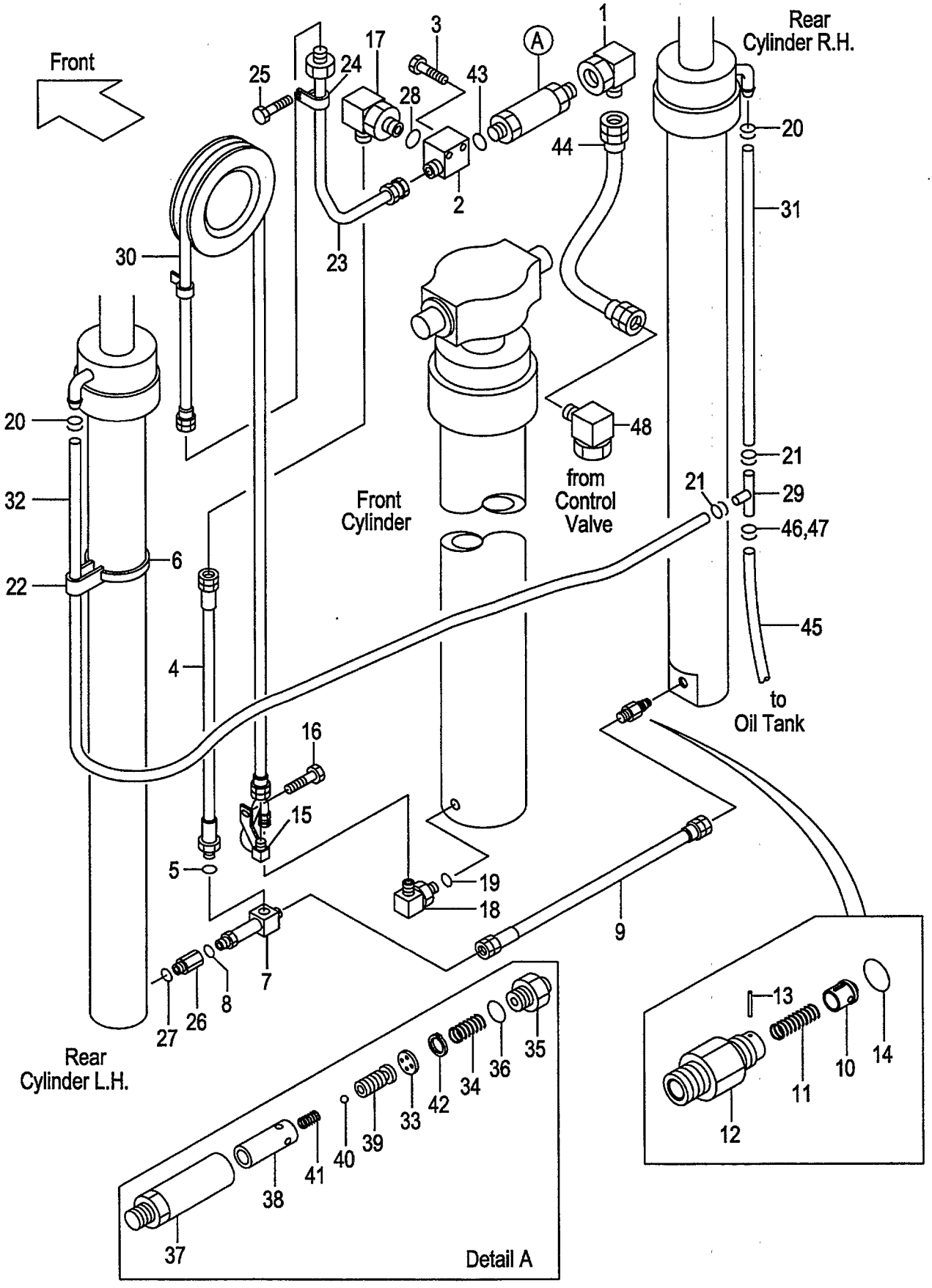

A:VFHM39F

Item No	Part No.	Mark	Description		Req'd	Remarks : Serial No.
-	23678-40105		TUBE,RH VFHM435	ﾁｭｰﾌﾞ	1	
-	23678-40120		TUBE,RH VFHM480	ﾁｭｰﾌﾞ	1	
-	23678-40130		TUBE,RH VFHM500	ﾁｭｰﾌﾞ	1	
-	23678-40145		TUBE,RH VFHM540	ﾁｭｰﾌﾞ	1	
-	23678-40150		TUBE,RH VFHM550	ﾁｭｰﾌﾞ	1	
-	23678-40165		TUBE,RH VFHM600	ﾁｭｰﾌﾞ	1	
-	23678-40190		TUBE,RH VFHM650	ﾁｭｰﾌﾞ	1	
-	23678-40210		TUBE,RH VFHM700	ﾁｭｰﾌﾞ	1	
-	23678-40255		TUBE,RH VFHM750	ﾁｭｰﾌﾞ	1	
-	04710-04080		HOSE,RH VFHM360	ﾎｰｽ	1	[FC][RTL]
-	04710-04095		HOSE,RH VFHM400	ﾎｰｽ	1	[FC][RTL]
-	04710-04105		HOSE,RH VFHM435	ﾎｰｽ	1	[FC][RTL]
-	04710-04120		HOSE,RH VFHM480	ﾎｰｽ	1	[FC][RTL]
-	04710-04130		HOSE,RH VFHM500	ﾎｰｽ	1	[FC][RTL]
-	04710-04145		HOSE,RH VFHM540	ﾎｰｽ	1	[FC][RTL]
-	04710-04150		HOSE,RH VFHM550	ﾎｰｽ	1	[FC][RTL]
-	04710-04165		HOSE,RH VFHM600	ﾎｰｽ	1	[FC][RTL]
-	04710-04190		HOSE,RH VFHM650	ﾎｰｽ	1	[FC][RTL]
-	04710-04210		HOSE,RH VFHM700	ﾎｰｽ	1	[FC][RTL]
-	04710-04225		HOSE,RH VFHM750	ﾎｰｽ	1	[FC][RTL]
32	23678-40145		TUBE,LH VFHM360	ﾁｭｰﾌﾞ	1	
-	23678-40160		TUBE,LH VFHM400	ﾁｭｰﾌﾞ	1	
-	23678-40170		TUBE,LH VFHM435	ﾁｭｰﾌﾞ	1	
-	23678-40185		TUBE,LH VFHM480	ﾁｭｰﾌﾞ	1	
-	23678-40195		TUBE,LH VFHM500	ﾁｭｰﾌﾞ	1	
-	23678-40210		TUBE,LH VFHM540	ﾁｭｰﾌﾞ	1	
-	23678-40215		TUBE,LH VFHM550	ﾁｭｰﾌﾞ	1	
-	23678-40230		TUBE,LH VFHM600	ﾁｭｰﾌﾞ	1	
-	23678-40255		TUBE,LH VFHM650	ﾁｭｰﾌﾞ	1	
-	23678-40275		TUBE,LH VFHM700	ﾁｭｰﾌﾞ	1	
-	23678-40290		TUBE,LH VFHM750	ﾁｭｰﾌﾞ	1	
-	04710-04145		HOSE,LH VFHM360	ﾎｰｽ	1	[FC][RTL]
-	04710-04160		HOSE,LH VFHM400	ﾎｰｽ	1	[FC][RTL]
-	04710-04170		HOSE,LH VFHM435	ﾎｰｽ	1	[FC][RTL]
-	04710-04185		HOSE,LH VFHM480	ﾎｰｽ	1	[FC][RTL]
-	04710-04195		HOSE,LH VFHM500	ﾎｰｽ	1	[FC][RTL]
-	04710-04210		HOSE,LH VFHM540	ﾎｰｽ	1	[FC][RTL]
-	04710-04215		HOSE,LH VFHM550	ﾎｰｽ	1	[FC][RTL]
-	04710-04230		HOSE,LH VFHM600	ﾎｰｽ	1	[FC][RTL]
-	04710-04255		HOSE,LH VFHM650	ﾎｰｽ	1	[FC][RTL]
-	04710-04275		HOSE,LH VFHM700	ﾎｰｽ	1	[FC][RTL]
-	04710-04290		HOSE,LH VFHM750	ﾎｰｽ	1	[FC][RTL]
A5	234F8-41001		REGULATOR-ASSY,FLOW	ﾚｷﾞｭﾚｰﾀｱｯｾﾝ	1	INC.33-42
33	NO PART NO.	#	PLATE	ﾌﾟﾚｰﾄ	1	
34	27979-43101		SPRING	ｽﾌﾟﾘﾝｸﾞ	1	
35	NO PART NO.	#	NIPPLE	ﾆｯﾌﾟﾙ	1	
36	03300-00280		O-RING	Oﾘﾝｸﾞ	1	
37	NO PART NO.	#	CASE	ｹｰｽ	1	
38	NO PART NO.	#	SLEEVE	ｽﾘｰﾌﾞ	1	

FIG.205 MAST PIPING[VFHM39F]

(M5020860) マストパイピング

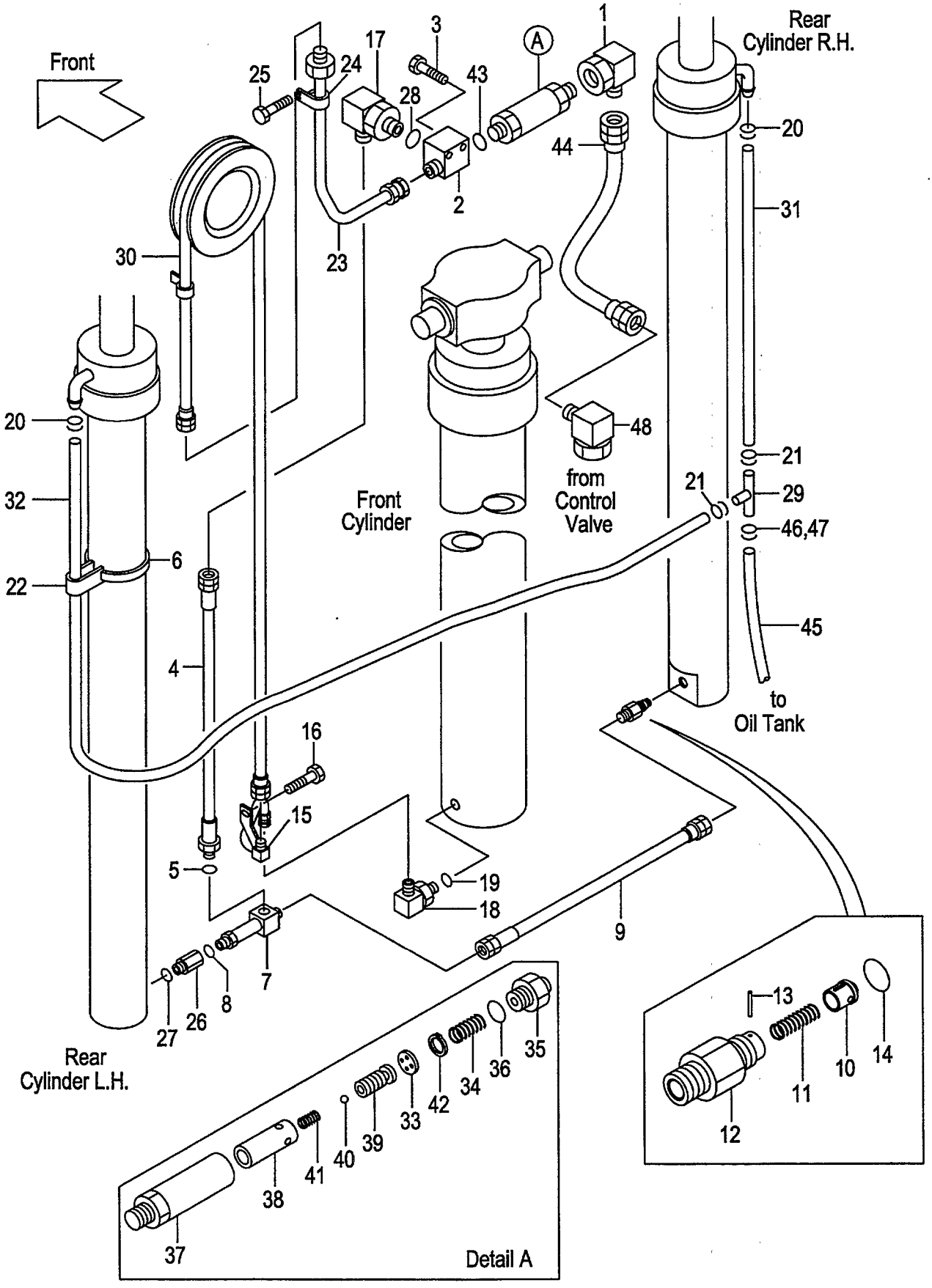

A:VFHM39F

Item No	Part No.	Mark	Description		Req'd	Remarks : Serial No.
39	NO PART NO.	#	PISTON	ﾋﾟｽﾄﾝ	1	
40	24459-42951		BALL,NYLON	ﾎﾞｰﾙ	1	
41	214A8-44151		SPRING	ｽﾌﾟﾘﾝｸﾞ	1	
42	02110-00018		RING,SNAP	ｽﾅｯﾌﾟﾘﾝｸﾞ	1	
43	03320-00180		O-RING	Oﾘﾝｸﾞ	1	
44	277N0-82021		HOSE	ﾎｰｽ	1	
45	23678-40110		TUBE	ﾁｭｰﾌﾞ	1	
-	04710-04125		HOSE	ﾎｰｽ	1	[FC][RTL][CS35][FCS35] [FCS45][FCS55]
46	04911-00018		CLIP	ｸﾘｯﾌﾟ	1	
-	04911-00021		CLIP	ｸﾘｯﾌﾟ	1	[FC][RTL][CS35][FCS35] [FCS45][FCS55]
47	04914-00016		CLAMP	ｸﾗﾝﾌﾟ	1	
-	04911-00021		CLIP	ｸﾘｯﾌﾟ	1	[FC][RTL][CS35][FCS35] [FCS45][FCS55]
48	62150-14321		ELBOW	ｴﾙﾎﾞ	1	[FC][RTL][CS35][FCS35] [FCS45][FCS55]

PARTS NUMBER INDEX

Part No.	Fig.No.	Part No.	Fig.No.	Part No.	Fig.No.	Part No.	Fig.No.
B-B3613-13001	67	B-21011-31702	157	B-23451-02212	67	B-30697-54102	188
B-B3613-13001	69	B-21011-31702	157	B-23451-02212	69	B-30697-54201	188
B-B6127-20612	172	B-21011-31702	157	B-23641-00313	67	B-30697-54202	188
B-B6341-01401	172	B-21011-32404	155	B-23641-00313	69	B-30697-54301	188
B-B6351-01401	172	B-21011-32404	156	B-23641-01609	67	B-30697-54302	188
B-B670B-00086	172	B-21011-32404	157	B-23641-01609	69	B-30697-54401	188
B-B670B-00087	172	B-21011-32404	157	B-23641-01610	67	B-30697-54402	188
B-C0003-30301	151	B-21011-32404	157	B-23641-01610	69	B-30697-54501	188
B-C0003-30301	152	B-21011-32801	155	B-23641-02218	67	B-30697-54502	188
B-C0003-30301	153	B-21011-32801	156	B-23641-02218	69	B-30697-54601	188
B-21001-00106	154	B-21011-32801	157	B-23641-02227	67	B-30697-54602	188
B-21001-00106	155	B-21011-32801	157	B-23641-02227	69	B-30697-54701	188
B-21001-00106	156	B-21011-32801	157	B-23641-02508	67	B-30697-54702	188
B-21001-00106	157	B-21013-36432	150	B-23641-02508	69	B-30697-54801	188
B-21001-00106	157	B-21013-36432	151	B-23641-03314	67	B-30697-54802	188
B-21001-00106	157	B-21013-36432	152	B-23641-03314	69	B-30697-54901	188
B-21001-00689	155	B-21013-36432	153	B-23641-03716	67	B-30697-54902	188
B-21001-00689	156	B-21013-36432	155	B-23641-03716	67	B-30697-55001	188
B-21001-00689	157	B-21013-36433	150	B-23641-03716	69	B-30697-55002	188
B-21001-00689	157	B-21013-36433	151	B-23641-03716	69	B-30697-55101	188
B-21001-00689	157	B-21013-36433	152	B-23641-04303	67	B-30697-55102	188
B-21001-90408	155	B-21013-36433	153	B-23641-04303	69	B-30697-55201	188
B-2101A-30016	150	B-21013-36433	156	B-23642-00911	67	B-30697-55202	188
B-2101A-30016	151	B-21013-37344	150	B-23642-00911	69	B-30697-55301	188
B-2101A-30016	152	B-21013-37344	151	B-23643-00296	67	B-30697-55302	188
B-2101A-30016	153	B-21013-37344	152	B-23643-00296	69	B-30697-55401	188
B-21011-30134	150	B-21013-37344	153	B-23643-00526	67	B-30697-55402	188
B-21011-30134	151	B-21013-37344	154	B-23643-00526	69	B-30697-55501	188
B-21011-30134	152	B-21013-37349	150	B-23643-00618	67	B-30697-55502	188
B-21011-30134	153	B-21013-37349	151	B-23643-00618	69	B-30697-55601	188
B-21011-30507	155	B-21013-37349	151	B-23711-01922	67	B-30697-55602	188
B-21011-30507	157	B-21013-37349	152	B-23711-01922	69	B-30697-55701	188
B-21011-30507	157	B-21013-37349	152	B-23711-03701	67	B-30697-55702	188
B-21011-30507	157	B-21013-37349	153	B-23711-03701	69	B-30697-55801	188
B-21011-30528	156	B-21013-37349	153	B-30046-67103	188	B-30697-55802	188
B-21011-30603	155	B-21013-37349	154	B-30046-67103	188	B-30697-55901	188
B-21011-30603	156	B-21013-39701	151	B-30121-55043	188	B-30697-55902	188
B-21011-30603	157	B-21013-39701	152	B-30131-45017	188	B-3070A-00103	172
B-21011-30603	157	B-21013-39701	153	B-30131-55018	188	B-3070B-00217	172
B-21011-30603	157	B-21013-39701	157	B-30141-35012	172	B-30961-03012	172
B-21011-30604	155	B-21013-39701	157	B-30141-91048	188	B-30961-04512	188
B-21011-30604	156	B-21013-39701	157	B-30151-03006	172	B-91111-60102	155
B-21011-30604	157	B-21021-30103	151	B-30161-55046	188	B-91111-60102	156
B-21011-30604	157	B-21021-30104	151	B-30161-91775	188	B-91111-60102	157
B-21011-30604	157	B-21031-30103	152	B-30191-30025	172	B-91111-60102	157
B-21011-30618	156	B-21031-30104	152	B-30191-45025	188	B-91111-60102	157
B-21011-30702	155	B-21041-30103	153	B-30296-72103	188	B-91511-08180	154
B-21011-30702	156	B-21041-30104	153	B-30296-72103	188	B-92703-06181	154
B-21011-30702	157	B-21731-30306	154	B-30296-72103	188	B-92703-06181	155
B-21011-30702	157	B-21731-30307	154	B-30296-72103	188	B-92703-06181	156
B-21011-30702	157	B-21731-30406	154	B-30296-72103	188	B-92703-06181	157
B-21011-31011	155	B-21731-30502	154	B-30311-01403	172	B-92703-06181	157
B-21011-31011	156	B-21731-30613	154	B-30421-30005	172	B-92703-06181	157
B-21011-31011	157	B-21731-30703	154	B-30431-35009	172	B-93118-08652	150
B-21011-31011	157	B-21731-30802	154	B-30461-55039	188	B-93118-08652	151
B-21011-31011	157	B-21733-40212	154	B-3055A-00058	188	B-93118-08652	152
B-21011-31105	150	B-23451-02016	67	B-3055B-00097	188	B-93118-08652	153
B-21011-31106	150	B-23451-02016	69	B-30551-91001	188	B-93128-10082	150
B-21011-31702	155	B-23451-02106	67	B-3065B-00211	172	B-93128-10082	151
B-21011-31702	156	B-23451-02106	69	B-30697-54101	188	B-93128-10082	152

PARTS NUMBER INDEX

Part No.	Fig.No.	Part No.	Fig.No.	Part No.	Fig.No.	Part No.	Fig.No.
B-93128-10082	153	HC516G2-42411	68	01100-14035	94	01171-06025	99
B-93364-08052	154	LB32M8-10011	190	01100-14035	185	01181-08016	133
B-94101-20512	67	R-402-00710-12	148	01100-14035	192	01181-08016	134
B-94101-20512	69	R-402-00710-12	149	01100-14035	200	01181-08016	135
B-94721-38151	67	R-402-65004-03	148	01100-16016	188	01181-08016	137
B-94721-38151	69	R-402-65004-28	149	01100-16016	195	01182-08025	12
B-95111-01200	154	R-403-24323	149	01100-16016	203	01183-05010	13
B-95112-06000	172	01030-04014	40	01100-16025	188	01183-05012	182
B-95113-01800	155	01030-04020	45	01100-16025	204	01183-05012	182
B-95113-02400	154	01030-05065	27	01100-16045	75	01183-06012	159
B-95121-06000	67	01033-05014	19	01100-16055	201	01183-06012	160
B-95121-06000	67	01033-05014	20	01100-16065	123	01183-06012	161
B-95121-06000	69	01044-04014	40	01100-16075	195	01183-06012	162
B-95121-06000	69	01066-08008	51	01100-16075	203	01183-06016	127
B-95121-07000	172	01066-08008	58	01103-08016	51	01183-06016	197
B-95133-00500	156	01066-08008	63	01103-08016	63	01183-06016	205
B-95151-06300	67	01066-10012	172	01103-08016	73	01183-08016	2
B-95151-06300	69	01066-10012	172	01103-08020	52	01183-08016	14
B-95713-06000	172	01100-06010	25	01103-08025	59	01183-08016	15
B-96111-10613	172	01100-06010	26	01103-08035	56	01183-08016	21
B-96401-30159	172	01100-06012	107	01103-08040	55	01183-08016	51
B-97123-01111	154	01100-06020	45	01103-08040	62	01183-08016	63
C-K2-11242-52000	65	01100-06055	164	01103-08045	56	01183-08016	72
C-52-10901-64550	65	01100-06055	165	01103-08060	59	01183-08016	74
C-52-10901-64560	65	01100-08020	32	01103-10016	54	01183-08016	103
C-52-11003-05143	65	01100-08020	33	01103-10020	53	01183-08016	104
C-52-11105-54110	65	01100-08020	34	01103-10020	195	01183-08016	105
C-52-11204-69010	65	01100-08020	35	01103-10020	203	01183-08016	105
C-52-11218-15151	65	01100-08020	36	01103-10030	52	01183-08016	107
C-52-11218-15161	65	01100-08020	47	01103-10030	55	01183-08016	113
C-52-11218-25151	65	01100-08020	48	01103-10035	62	01183-08016	115
C-52-11218-25161	65	01100-08020	147	01103-10050	62	01183-08016	132
C-52-11232-54540	65	01100-08025	106	01103-10060	113	01183-08016	136
C-52-11239-51270	65	01100-08045	14	01103-10060	115	01183-08020	169
C-52-11239-52320	65	01100-08045	15	01103-10065	55	01183-08020	171
C-52-11242-13300	65	01100-08045	50	01103-10097	1	01183-08022	14
C-52-11242-14500	65	01100-08045	62	01103-14040	188	01183-08025	169
C-52-11242-14530	65	01100-08050	122	01103-14040	196	01183-08035	63
C-52-11242-23300	65	01100-08065	3	01103-16065	186	01183-08040	50
C-52-11242-24500	65	01100-10030	112	01103-16065	193	01183-08040	54
C-52-11242-24530	65	01100-10030	113	01103-16065	201	01183-10035	50
C-52-11242-52380	65	01100-10030	115	01106-12040	64	01183-10035	54
C-52-11242-54010	65	01100-12020	104	01109-08020	13	01184-10016	52
C-52-11242-54011	65	01100-12030	72	01109-12030	131	01184-10020	114
C-52-11246-11000	65	01100-12030	74	01110-30100	129	01184-10020	193
C-52-11246-21000	65	01100-12045	14	01110-36200	128	01184-10020	196
C-52-11246-52001	65	01100-12070	204	01110-36200	130	01184-10025	44
C-52-11246-54071	65	01100-14025	185	01113-30400	130	01184-10025	57
C-52-11246-73009	65	01100-14025	185	01120-08035	108	01184-10025	60
C-52-11246-83018	65	01100-14025	192	01120-08035	109	01184-10025	113
C-52-11246-83028	65	01100-14025	192	01120-08035	110	01184-10025	115
C-52-11277-10000-05	65	01100-14025	200	01120-08035	111	01184-10030	112
C-52-11277-20000-05	65	01100-14030	185	01123-10045	52	01184-10030	113
C-52-30780-02340	65	01100-14030	185	01141-06012	72	01184-10030	114
C-52-51302-53840	65	01100-14030	185	01141-06012	73	01184-10030	115
C-52-51308-54160	65	01100-14030	192	01141-06012	73	01184-10030	116
C-90-0567-0822	65	01100-14030	192	01141-06012	73	01184-10030	117
C-90-9200-0800	65	01100-14030	192	01141-06012	74	01184-10030	118
HC26094-17021	68	01100-14030	200	01170-04012	13	01184-10030	119
HC32G4-10101	68	01100-14030	200	01170-05045	59	01184-10050	50

PARTS NUMBER INDEX

Part No.	Fig.No.	Part No.	Fig.No.	Part No.	Fig.No.	Part No.	Fig.No.
01184-10050	54	01186-12030	131	01400-00018	203	02000-00006	114
01184-10055	113	01186-12035	99	01400-00018	204	02000-00006	136
01184-10055	115	01186-12035	134	01400-10020	64	02000-00008	12
01184-10060	205	01186-12045	14	01400-20008	12	02000-00008	14
01184-12025	184	01186-12045	15	01400-20008	17	02000-00008	14
01184-12025	191	01213-10025	51	01400-30008	17	02000-00008	15
01184-12025	199	01213-10025	63	01402-00008	106	02000-00008	17
01184-12030	67	01218-10040	1	01402-00008	108	02000-00008	73
01184-12030	69	01400-00004	45	01402-00008	109	02000-00008	112
01184-12040	184	01400-00006	21	01402-00008	110	02000-00008	113
01184-12040	191	01400-00006	45	01402-00008	111	02000-00008	115
01184-12040	199	01400-00006	46	01402-00008	112	02000-00008	132
01184-12050	184	01400-00006	48	01402-00008	112	02000-00008	133
01184-12050	191	01400-00006	107	01402-00010	112	02000-00008	144
01185-06012	13	01400-00006	112	01402-00010	113	02000-00010	7
01185-06016	19	01400-00006	113	01402-00010	115	02000-00010	12
01185-06016	20	01400-00006	114	01402-00010	146	02000-00010	13
01185-08012	21	01400-00006	115	01402-00010	183	02000-00010	38
01185-08016	3	01400-00006	136	01402-00010	190	02000-00010	53
01185-08016	5	01400-00008	12	01402-00010	198	02000-00010	72
01185-08016	6	01400-00008	14	01402-00012	72	02000-00010	73
01185-08016	8	01400-00008	32	01402-00012	74	02000-00010	74
01185-08016	9	01400-00008	33	01402-00014	66	02000-00010	77
01185-08016	13	01400-00008	34	01402-00014	70	02000-00010	112
01185-08016	14	01400-00008	35	01402-00022	71	02000-00010	113
01185-08016	14	01400-00008	36	01402-00022	71	02000-00010	114
01185-08016	15	01400-00008	37	01402-00024	93	02000-00010	115
01185-08016	21	01400-00008	40	01402-00024	93	02000-00010	132
01185-08016	22	01400-00008	47	01402-00024	95	02000-00010	146
01185-08016	28	01400-00008	48	01402-00024	95	02000-00012	14
01185-08016	37	01400-00008	50	01402-10010	67	02000-00012	66
01185-08016	171	01400-00008	62	01402-10010	69	02000-00016	107
01185-08020	8	01400-00008	63	01402-10018	93	02000-00016	113
01185-08020	33	01400-00008	122	01402-10018	95	02000-00016	114
01185-08020	36	01400-00008	144	01407-00022	93	02000-00016	115
01185-08020	55	01400-00008	144	01407-00022	95	02000-00016	188
01185-08020	132	01400-00008	145	01412-00030	72	02000-00016	188
01185-08020	135	01400-00008	146	01412-00030	73	02000-00016	195
01185-08030	14	01400-00008	147	01412-00030	74	02000-00016	195
01185-10055	148	01400-00010	38	01412-10016	71	02000-00016	203
01185-10055	149	01400-00010	50	01412-10016	71	02000-00016	203
01186-06012	137	01400-00010	52	01412-10016	72	02000-00016	203
01186-06012	137	01400-00010	54	01412-10016	72	02000-00016	204
01186-08016	108	01400-00010	62	01412-10016	74	02000-00022	52
01186-08016	109	01400-00010	72	01412-10016	74	02000-00024	51
01186-08016	110	01400-00010	73	01412-10016	93	02000-00027	63
01186-08016	111	01400-00010	74	01412-10016	95	02000-00030	72
01186-08020	38	01400-00010	77	01412-10020	93	02000-00030	73
01186-08025	44	01400-00010	112	01412-10020	95	02000-00030	74
01186-10016	171	01400-00010	113	01420-00006	22	02000-20010	131
01186-10020	38	01400-00010	114	02000-00004	13	02000-20010	137
01186-10020	38	01400-00010	115	02000-00004	45	02000-20010	188
01186-10020	136	01400-00012	86	02000-00005	159	02000-20010	196
01186-10020	205	01400-00012	88	02000-00005	160	02000-20010	204
01186-10025	38	01400-00012	90	02000-00005	161	02000-20010	204
01186-10030	77	01400-00012	92	02000-00005	162	02000-20016	195
01186-12025	99	01400-00012	107	02000-00006	25	02001-00008	17
01186-12025	100	01400-00012	204	02000-00006	26	02001-00012	131
01186-12025	101	01400-00018	188	02000-00006	107	02003-20010	55
01186-12025	102	01400-00018	195	02000-00006	107	02010-00004	40

PARTS NUMBER INDEX

Part No.	Fig.No.	Part No.	Fig.No.	Part No.	Fig.No.	Part No.	Fig.No.
02010-00004	45	02010-20010	196	02200-03030	204	03000-06306	58
02010-00006	21	02010-20010	204	02200-03040	188	03010-06904	68
02010-00006	22	02010-20010	204	02200-04025	107	03042-06308	204
02010-00006	25	02011-00008	51	02200-04025	113	03071-30207	72
02010-00006	26	02011-00008	52	02200-04025	114	03071-30207	73
02010-00006	45	02011-00008	55	02200-04025	115	03071-30207	74
02010-00006	107	02011-00008	59	02200-04040	93	03071-30211	72
02010-00006	136	02011-00008	62	02200-04040	95	03071-30211	73
02010-00006	164	02011-00008	63	02200-04040	129	03071-30211	74
02010-00006	165	02011-00008	73	02200-06055	72	03071-30214	64
02010-00008	3	02011-00010	52	02200-06055	73	03126-83201	72
02010-00008	12	02011-00010	54	02200-06055	74	03126-83201	73
02010-00008	12	02011-00010	55	02200-16010	107	03126-83201	74
02010-00008	14	02011-00010	62	02200-16010	159	03146-13201	72
02010-00008	15	02011-00010	195	02200-16010	160	03146-13201	72
02010-00008	17	02011-00010	203	02200-16010	161	03146-13201	73
02010-00008	40	02011-00012	64	02200-16010	162	03146-13201	74
02010-00008	50	02011-00012	86	02200-32020	113	03146-13201	74
02010-00008	62	02011-00012	88	02200-32020	115	03190-00006	195
02010-00008	122	02011-00012	90	02200-32025	112	03190-00006	196
02010-00008	144	02011-00012	92	02200-32025	113	03190-00006	196
02010-00008	144	02011-00014	188	02200-32025	114	03190-00006	203
02010-00008	145	02011-00014	196	02200-32025	115	03190-00013	52
02010-00008	146	02011-00016	186	02200-32032	71	03192-00012	64
02010-00008	147	02011-00016	193	02200-32032	71	03192-10012	64
02010-00010	72	02011-00016	201	02200-32032	72	03217-08501	72
02010-00010	73	02013-00008	13	02200-32032	72	03217-08501	73
02010-00010	74	02013-00008	17	02200-32032	74	03217-08501	74
02010-00010	113	02013-00012	131	02200-32032	74	03300-00160	52
02010-00010	115	02100-00012	59	02200-32032	93	03300-00280	197
02010-00012	14	02100-00020	68	02200-32032	95	03300-00280	205
02010-00012	104	02100-00022	52	02212-06016	56	03310-00300	52
02010-00012	204	02100-00025	51	02212-10020	64	03310-00600	51
02010-00014	94	02100-00025	63	02212-10020	94	03310-00600	63
02010-00014	185	02100-00028	63	02212-10025	59	03310-00800	60
02010-00014	185	02100-00030	53	02212-12020	52	03320-00110	94
02010-00014	192	02100-00030	57	02212-12020	55	03320-00110	113
02010-00014	192	02100-00040	53	02262-06015	107	03320-00110	115
02010-00014	200	02100-00040	58	02262-06020	114	03320-00110	169
02010-00014	200	02100-00040	188	02262-06025	114	03320-00140	158
02010-00016	75	02100-00040	195	02262-08020	113	03320-00140	164
02010-00016	123	02100-00040	203	02262-08020	115	03320-00140	165
02010-00016	188	02100-00040	204	02262-08025	112	03320-00140	189
02010-00016	188	02100-00045	184	02262-10030	112	03320-00140	189
02010-00016	195	02100-00045	191	02262-10030	113	03320-00140	197
02010-00016	195	02110-00018	189	02262-10030	114	03320-00140	197
02010-00016	201	02110-00018	197	02262-10030	115	03320-00140	197
02010-00016	203	02110-00018	205	02270-01014	189	03320-00140	205
02010-00016	203	02110-00030	59	02270-01014	197	03320-00140	205
02010-00016	204	02110-00037	68	02270-01014	205	03320-00140	205
02010-00030	129	02110-00062	94	02360-05019	52	03320-00180	148
02010-00030	130	02110-00090	204	02360-05019	63	03320-00180	149
02010-00036	128	02120-00050	53	02432-01008	174	03320-00180	149
02010-00036	130	02121-00058	58	02432-01008	199	03320-00180	149
02010-10006	72	02121-00080	53	03000-06207	53	03320-00180	158
02010-10006	73	02200-02016	113	03000-06208	53	03320-00180	158
02010-10006	73	02200-02016	115	03000-06213	61	03320-00180	164
02010-10006	73	02200-02020	112	03000-06306	53	03320-00180	165
02010-10006	74	02200-03030	195	03000-06306	57	03320-00180	189
02010-20010	188	02200-03030	203	03000-06306	58	03320-00180	197

PARTS NUMBER INDEX

Part No.	Fig.No.	Part No.	Fig.No.	Part No.	Fig.No.	Part No.	Fig.No.
03320-00180	205	04710-04120	205	04901-00190	72	04913-11200	113
03320-00180	205	04710-04121	164	04901-00190	73	04913-11200	114
03320-00180	205	04710-04121	165	04901-00190	74	04913-11200	115
03320-00240	196	04710-04125	189	04901-00191	72	04913-11200	116
03320-00240	197	04710-04125	189	04901-00191	73	04913-11380	104
03320-00240	205	04710-04125	189	04901-00191	74	04913-11380	167
03320-00280	189	04710-04125	205	04911-00018	189	04913-20380	170
03320-00290	148	04710-04130	205	04911-00018	189	04913-21380	189
03320-00290	149	04710-04135	189	04911-00018	189	04913-21380	205
03320-00340	196	04710-04140	166	04911-00018	205	04914-00016	189
03320-00340	204	04710-04140	168	04911-00018	205	04914-00016	205
03340-00140	148	04710-04145	189	04911-00018	205	04914-00019	126
03340-00140	149	04710-04145	189	04911-00020	166	04914-00019	171
03350-00450	93	04710-04145	205	04911-00020	167	04914-00019	197
03350-00450	95	04710-04145	205	04911-00020	168	06005-60015	83
03350-00950	195	04710-04150	189	04911-00021	164	06005-65010	88
03350-00950	203	04710-04150	205	04911-00021	165	06005-65010	89
04000-00300	171	04710-04160	189	04911-00021	166	06005-81515	79
04134-20404	164	04710-04160	205	04911-00021	167	06005-81515	85
04134-20404	165	04710-04165	167	04911-00021	168	06005-81515	85
04150-00404	205	04710-04165	189	04911-00021	171	06006-60015	83
04150-20202	113	04710-04165	205	04911-00021	189	06006-65010	86
04150-20202	115	04710-04170	189	04911-00021	189	06006-65010	87
04150-20404	149	04710-04170	205	04911-00021	205	06006-65010	88
04150-30404	158	04710-04175	189	04911-00021	205	06006-65010	89
04601-44211	205	04710-04185	189	04911-00021	205	06007-60015	83
04601-44236	205	04710-04185	205	04911-00022	39	06007-65010	88
04601-44261	205	04710-04190	189	04911-00032	171	06007-65010	89
04601-44290	205	04710-04190	189	04911-00040	164	06007-81515	79
04601-44310	205	04710-04190	205	04911-00040	165	06007-81515	85
04601-44335	205	04710-04195	205	04911-00044	5	06007-81515	85
04601-44342	205	04710-04200	189	04911-00044	6	06701-65010	86
04601-44379	205	04710-04200	189	04911-00044	164	06701-65010	87
04601-44421	205	04710-04210	189	04911-00044	165	06701-65010	88
04601-44465	205	04710-04210	205	04911-00046	164	06701-65010	89
04601-44497	205	04710-04210	205	04911-00046	165	06710-60015	83
04691-02065	164	04710-04215	189	04911-00053	5	06711-60015	83
04691-02065	165	04710-04215	205	04911-00053	6	06711-65010	86
04691-04048	164	04710-04225	205	04911-00055	3	06711-65010	87
04691-04048	164	04710-04230	189	04911-00060	3	06711-65010	88
04691-04048	165	04710-04230	205	04911-00060	10	06711-65010	89
04691-04048	165	04710-04240	189	04911-00070	3	06731-00120	83
04691-04108	164	04710-04245	189	04911-00090	4	06731-00120	85
04710-04005	126	04710-04255	189	04913-10100	19	06806-60015	84
04710-04030	164	04710-04255	205	04913-10100	20	06806-65010	90
04710-04030	165	04710-04265	189	04913-10200	19	06806-65010	91
04710-04040	171	04710-04270	189	04913-10200	20	06806-81515	80
04710-04050	171	04710-04275	205	04913-10200	45	06807-65010	90
04710-04060	171	04710-04280	189	04913-11100	19	06807-65010	90
04710-04060	189	04710-04290	205	04913-11100	20	06807-81515	80
04710-04070	189	04710-04310	189	04913-11100	27	06807-81515	80
04710-04080	205	04710-04335	189	04913-11120	30	06841-60015	84
04710-04085	189	04901-00100	51	04913-11120	31	06841-65010	90
04710-04095	189	04901-00100	72	04913-11120	32	06843-60015	84
04710-04095	205	04901-00100	74	04913-11200	19	06843-65010	90
04710-04102	164	04901-00100	172	04913-11200	20	06851-60015	84
04710-04102	165	04901-00100	186	04913-11200	39	06853-65010	90
04710-04105	205	04901-00100	193	04913-11200	67	09001-10037	195
04710-04110	189	04901-00100	201	04913-11200	68	09001-10039	203
04710-04120	189	04901-00160	51	04913-11200	69	09001-10041	195

PARTS NUMBER INDEX

Part No.	Fig.No.	Part No.	Fig.No.	Part No.	Fig.No.	Part No.	Fig.No.
09001-10043	188	09192-30044	201	12163-82541	63	134A3-42411	52
09001-10043	195	10113-40171	53	12163-82561	56	134A3-42421	52
09001-10043	203	110F7-12001	148	12163-82561	56	134A3-42431	52
09001-10047	188	11243-82081	58	12163-82621	55	134A3-42451	52
09001-10047	195	11243-82091	58	124G3-12011	51	134A3-48911	51
09001-10047	195	11243-82161	58	124G3-52011	61	134A3-48911	52
09001-10047	203	11243-82181	58	124T3-42651	57	134A3-48911	53
09001-10049	195	11243-82211	58	124T3-42661	57	134A3-48911	60
09001-10051	188	114A3-10501	51	124T3-43001	53	134A3-52001	61
09001-10053	195	114A3-12012	51	124T3-43041	12	134A3-52041	61
09001-10053	195	114A3-12012	63	124U3-82081	57	134A3-52051	61
09001-10053	203	114L3-12022	63	124U3-82091	57	134A3-52061	61
09001-10053	204	114L3-12031	63	124U3-82521	57	134A3-59801	61
09001-10055	188	115G3-82111	57	131A3-10201	51	134A7-10301	148
09001-10055	188	115G3-82241	57	131A3-42021	53	134B3-80281	57
09001-10055	203	115G3-82251	57	131M2-52001	55	134B3-82011	55
09001-10057	195	115G3-82331	58	131N3-12011	63	134B3-82021	55
09001-10057	204	115G3-82341	58	131N3-12031	63	134B3-82031	55
09001-10059	188	115G3-82351	58	131N3-12041	63	134B3-82041	55
09001-10059	195	115G3-82361	58	131N3-12101	63	134B3-82051	55
09001-10059	195	115G3-82401	58	131N3-12151	63	134B3-82091	56
09001-10059	203	115G3-82411	58	132G3-80201	58	134B3-82101	55
09001-10061	195	115G3-82451	57	134A3-10211	51	134B3-82141	57
09001-10061	203	115G3-82471	53	134A3-12011	51	134B3-82281	55
09001-10061	204	115G3-82471	57	134A3-12021	51	134B3-82291	55
09001-10063	188	115G3-82491	59	134A3-12021	63	134B3-82301	55
09001-10065	188	115G3-82512	59	134A3-12031	51	134B3-82311	55
09001-10065	204	115G3-82522	59	134A3-12051	52	134B3-82321	55
09001-10067	188	115G3-82641	53	134A3-22001	60	134B3-82361	58
09001-10067	195	115G3-82641	57	134A3-22011	60	134B3-82371	58
09001-10067	203	115G3-82651	57	134A3-22021	60	134B3-82381	57
09001-10069	188	115G3-82671	57	134A3-22031	60	134B3-82401	58
09001-10069	204	116H3-82101	55	134A3-22041	60	134B3-89821	55
09001-10071	188	116H3-82101	57	134A3-40201	52	134B3-89821	57
09001-10071	188	116H3-82201	57	134A3-40221	53	134B3-89861	56
09001-10071	195	116H3-82201	59	134A3-42021	52	134G3-80201	58
09001-10073	203	12003-12021	51	134A3-42031	52	134G3-80251	58
09001-10073	204	12003-42052	52	134A3-42051	53	134G3-80401	56
09001-10075	195	12003-42061	52	134A3-42071	53	134G3-82001	56
09001-10075	204	12003-42281	53	134A3-42081	53	134G3-82101	58
09001-10077	188	12003-42291	53	134A3-42101	53	134G3-82111	58
09001-10077	195	12003-42311	53	134A3-42111	53	134G3-82121	58
09001-10079	204	12003-42311	57	134A3-42121	53	134G3-82131	58
09001-10081	188	12003-42311	60	134A3-42131	53	134G3-82141	58
09001-10081	195	12003-42321	53	134A3-42141	53	134G3-89811	58
09001-10081	203	12003-42321	57	134A3-42151	53	134G3-89831	58
09001-10085	188	12003-42321	60	134A3-42171	53	134G3-89851	56
09001-10085	203	12003-42331	53	134A3-42181	53	134H3-10201	63
09001-10087	204	12003-42331	57	134A3-42191	53	134H3-10211	63
09001-10089	188	12003-42331	60	134A3-42201	53	134H3-12011	63
09001-10091	195	12003-42421	52	134A3-42211	53	134H3-12022	63
09001-10093	188	12003-42451	52	134A3-42221	52	134H7-10301	149
09001-10093	204	12003-42461	52	134A3-42221	57	135L3-82002	59
09001-10099	195	12003-43031	53	134A3-42251	53	136F2-50002	50
09001-10099	204	12003-43031	57	134A3-42261	53	136F2-50042	50
09001-10103	188	12163-82221	57	134A3-42271	53	136F3-42001	53
09001-10109	188	12163-82232	57	134A3-42301	53	136G2-50002	54
09192-30044	186	12163-82541	52	134A3-42321	53	136S2-50002	62
09192-30044	193	12163-82541	55	134A3-42331	53	137B2-50003	54
09192-30044	201	12163-82541	57	134A3-42401	52	137B3-80201	55

PARTS NUMBER INDEX

Part No.	Fig.No.	Part No.	Fig.No.	Part No.	Fig.No.	Part No.	Fig.No.
137B3-80211	55	205A2-63311	45	214A2-42331	5	214A5-52131	122
139A3-42011	53	20802-51301	170	214A2-42331	6	214A5-52241	122
139B3-80201	59	20803-71031	65	214A2-42331	25	214A5-53012	175
139B3-82111	59	20803-71041	65	214A2-42331	26	214A6-12601	75
139B3-82121	59	20803-71101	65	214A2-42331	113	214A6-42121	133
139B3-82131	59	209K2-40501	20	214A2-42331	115	214A6-42121	134
139B3-82141	59	209K2-43001	19	214A2-42371	43	214A6-42252	131
139B3-82151	59	209K2-43001	20	214A2-42611	7	214A6-42252	138
139B3-82161	59	209K4-10601	70	214A2-42611	21	214A6-42252	139
139B3-89801	59	209K4-10801	66	214A2-42611	33	214A6-42252	139
139B3-89811	59	209K4-10801	70	214A2-42611	34	214A6-42252	139
142F3-12001	51	209K4-12301	70	214A2-42611	35	214A6-42252	139
142G3-82001	55	209K4-12501	66	214A2-42611	36	214A6-42252	139
142S3-12001	63	209K4-12501	70	214A2-42611	46	214A6-42252	139
14354-12211	67	209K4-12511	66	214A2-42611	47	214A6-42252	140
14354-12211	69	209K4-12511	70	214A2-42611	48	214A6-42361	141
14354-12221	67	209K4-12521	66	214A2-42611	49	214A6-42361	142
14354-12221	69	209K4-12521	70	214A2-42621	21	214A6-42771	19
14354-12251	67	209K4-12531	66	214A2-44001	28	214A6-42771	20
14354-12251	69	209K4-12531	70	214A2-44511	27	214A6-42771	140
14354-12261	67	209K4-12541	66	214A2-52002	50	214A6-42771	141
14354-12261	69	209K4-12541	70	214A2-52002	62	214A6-42771	142
14354-12271	66	209K4-12561	66	214A2-52012	50	214A6-42911	137
14354-12271	70	209K4-12561	70	214A2-52012	62	214A7-42071	107
14354-12321	67	209P4-12111	66	214A3-02001	65	214A7-42071	159
14354-12321	69	209P4-12111	70	214A4-12161	66	214A7-42071	159
14453-52071	61	209P6-40401	132	214A4-12161	70	214A7-42071	160
14453-52081	61	209P6-42831	8	214A4-32041	72	214A7-42071	160
15533-10301	51	209P6-42841	132	214A4-32041	73	214A7-42071	160
15573-42011	53	209P7-42161	137	214A4-32041	74	214A7-42071	161
15573-42151	52	210F2-42011	27	214A4-32051	72	214A7-42071	161
15573-42151	64	210F2-42021	27	214A4-32051	73	214A7-42071	161
15583-82141	56	210F2-42031	27	214A4-32051	74	214A7-42071	161
15583-82161	56	210F2-42201	27	214A4-32131	72	214A7-42071	162
15583-82172	56	210F2-42211	27	214A4-32131	74	214A7-42071	162
15583-82181	56	210F2-42221	27	214A4-32161	72	214A7-42071	162
15583-82211	56	210F2-42231	27	214A4-32161	73	214A7-42071	162
15583-82241	56	21159-12501	175	214A4-32161	74	214A7-42071	162
15583-82441	57	21232-32551	12	214A4-32201	75	214A7-42171	159
15583-82451	57	21232-32551	13	214A4-32211	75	214A7-42171	160
15583-82461	57	21237-52051	123	214A4-50111	93	214A7-42171	161
15583-82521	55	21237-52051	123	214A4-50111	95	214A7-42171	162
15583-82541	55	21237-52062	123	214A4-52021	93	214A7-42181	163
15583-82571	59	21237-52062	123	214A4-52021	95	214A7-42181	163
15793-82321	59	214A0-62151	197	214A4-52031	93	214A7-42181	163
15793-82341	59	214A0-82681	195	214A4-52031	95	214A7-42181	163
15913-42511	53	214A0-82681	203	214A4-52041	93	214A7-42191	163
15943-82651	59	214A0-82831	195	214A4-52041	95	214A7-42201	163
15943-82661	59	214A0-82831	203	214A4-59802	93	214A7-62131	166
15943-82701	63	214A1-02111	1	214A4-59802	95	214A7-62131	168
16113-52121	61	214A1-02121	1	214A5-22001	107	214A8-02201	186
16113-52141	61	214A2-12001	7	214A5-22051	107	214A8-02201	193
16402-54331	42	214A2-12021	7	214A5-32101	112	214A8-02201	201
16402-54331	46	214A2-12111	7	214A5-32312	112	214A8-42571	196
16402-54331	47	214A2-12121	7	214A5-33012	112	214A8-42571	196
16402-54331	48	214A2-12141	7	214A5-33031	112	214A8-42661	188
19502-52551	63	214A2-12201	7	214A5-33041	112	214A8-42661	196
20224-30061	72	214A2-13001	7	214A5-33052	112	214A8-42661	204
20224-30061	74	214A2-13011	7	214A5-33062	112	214A8-43011	197
205A2-63311	21	214A2-40203	27	214A5-52121	122	214A8-44151	189

PARTS NUMBER INDEX

Part No.	Fig.No.	Part No.	Fig.No.	Part No.	Fig.No.	Part No.	Fig.No.
214A8-44151	197	214J8-10551	198	215E4-39801	74	216G2-43551	34
214A8-44151	205	214J8-10561	183	215E4-52231	73	216G2-43551	35
214A8-46001	196	214J8-10561	190	215E4-52301	73	216G2-43562	27
214A8-46001	196	214J8-10561	198	215E7-62091	167	216G2-43562	33
214A8-52051	94	214J8-10571	183	215E8-42171	188	216G2-43562	34
214A8-52221	94	214J8-10571	190	215E8-42171	196	216G2-43562	35
214A9-20101	181	214J8-10571	198	215E8-42171	204	216G2-43571	27
214A9-20101	181	214J8-10581	183	215E8-42171	204	216G2-43571	33
214J0-51701	196	214J8-10581	190	215E8-42181	188	216G2-43571	34
214J0-51711	196	214J8-10581	198	215E8-42181	196	216G2-43571	35
214J0-51721	196	214J8-10591	183	215E8-42181	204	216G2-43582	27
214J0-51731	196	214J8-10591	190	215E8-42181	204	216G2-43582	33
214J0-51741	196	214J8-10591	198	215K0-82701	188	216G2-43582	34
214J0-51751	196	214J8-10601	183	215K0-82701	204	216G2-43582	35
214J0-51761	196	214J8-10601	190	216G1-02111	1	216G2-43592	27
214J0-51771	196	214J8-10601	198	216G2-22051	10	216G2-43592	33
214J0-51781	196	214J8-10611	183	216G2-22202	124	216G2-43592	34
214J0-51791	196	214J8-10611	190	216G2-22202	125	216G2-43592	35
214J0-51801	196	214J8-10611	198	216G2-22211	10	216G2-43602	27
214J0-51811	196	214J8-10621	183	216G2-40602	27	216G2-43602	33
214J0-51821	196	214J8-10621	190	216G2-40602	33	216G2-43602	34
214J0-51831	196	214J8-10621	198	216G2-40602	34	216G2-43602	35
214J0-51841	196	214J8-10631	183	216G2-40602	35	216G2-43611	27
214J0-51851	196	214J8-10631	190	216G2-40701	27	216G2-43611	33
214J0-51861	196	214J8-10631	198	216G2-40711	27	216G2-43611	34
214J0-51871	196	214J8-10641	183	216G2-40721	27	216G2-43611	35
214J0-51881	196	214J8-10641	190	216G2-40731	27	216G2-43622	27
214J0-53681	196	214J8-10641	198	216G2-42131	19	216G2-43622	33
214J0-53681	196	214J8-10651	183	216G2-42131	20	216G2-43622	34
214J0-53781	196	214J8-10651	190	216G2-42311	21	216G2-43622	35
214J0-82411	195	214J8-10651	198	216G2-42321	21	216G2-43631	27
214J0-82411	203	214J8-10661	183	216G2-43111	22	216G2-43631	33
214J0-82521	204	214J8-10661	190	216G2-43161	18	216G2-43631	34
214J0-82521	204	214J8-10661	198	216G2-43201	18	216G2-43631	35
214J0-82521	204	214J8-10671	183	216G2-43221	18	216G2-43651	21
214J0-82521	204	214J8-10671	190	216G2-43231	18	216G2-43711	21
214J3-00302	64	214J8-10671	198	216G2-43241	18	216G4-12091	19
214J3-02011	64	214J8-10681	183	216G2-43251	18	216G4-12091	20
214J4-52001	93	214J8-10681	190	216G2-43261	18	216G4-12101	66
214J4-52001	95	214J8-10681	198	216G2-43271	18	216G4-12101	70
214J8-10501	183	214J8-11002	183	216G2-43281	18	216G4-12111	66
214J8-10501	183	214J8-11002	190	216G2-43291	18	216G4-12111	70
214J8-10501	190	214J8-11002	198	216G2-43301	18	216G4-12151	70
214J8-10501	190	214J8-42721	204	216G2-43401	21	216G4-12161	70
214J8-10501	198	214J8-42721	204	216G2-43411	21	216G4-12171	70
214J8-10501	198	214J8-46001	204	216G2-43421	21	216G4-12251	68
214J8-10511	183	214J8-46001	204	216G2-43502	27	216G4-12251	187
214J8-10511	190	214L5-32101	113	216G2-43502	33	216G4-12251	187
214J8-10511	198	214L5-32101	115	216G2-43502	34	216G4-12251	194
214J8-10521	183	214T2-42311	21	216G2-43502	35	216G4-12251	202
214J8-10521	190	214T2-42321	21	216G2-43531	27	216G4-12601	66
214J8-10521	198	214T6-42091	135	216G2-43531	33	216G4-12601	70
214J8-10531	183	215B4-52122	94	216G2-43531	34	216G4-12611	66
214J8-10531	190	215B8-52022	172	216G2-43531	35	216G4-12611	70
214J8-10531	198	215E4-12231	70	216G2-43542	27	216G4-12621	66
214J8-10541	183	215E4-32341	72	216G2-43542	33	216G4-12621	70
214J8-10541	190	215E4-32341	73	216G2-43542	34	216G4-12631	66
214J8-10541	198	215E4-32341	74	216G2-43542	35	216G4-12631	70
214J8-10551	183	215E4-39801	72	216G2-43551	27	216G4-12641	66
214J8-10551	190	215E4-39801	73	216G2-43551	33	216G4-12641	70

PARTS NUMBER INDEX

Part No.	Fig.No.	Part No.	Fig.No.	Part No.	Fig.No.	Part No.	Fig.No.
216G4-12661	66	216G7-40012	160	216H3-92171	132	222A2-42031	19
216G4-12661	70	216G7-40012	161	216H3-92281	159	222A2-42031	20
216G4-12681	66	216G7-40012	162	216H3-92281	160	222A2-42331	18
216G4-12681	70	216G7-40022	159	216H3-92281	161	222A2-42331	18
216G4-12711	66	216G7-40022	160	216H3-92281	162	222A2-42341	18
216G4-12711	70	216G7-40022	161	216H3-92291	116	222A2-42341	18
216G4-12741	66	216G7-40022	162	216H3-92291	117	222A2-42361	18
216G4-12741	70	216G7-40032	160	216H3-92291	118	222A2-42401	18
216G4-12751	66	216G7-40032	161	216H3-92291	119	222A2-42401	18
216G4-12751	70	216G7-40032	162	216H5-42141	132	222A2-42401	18
216G4-12761	66	216G7-40042	161	216H7-82111	170	222A2-42511	29
216G4-12761	70	216G7-40042	162	217G2-32001	12	222A2-42511	30
216G5-22081	107	216G7-42001	159	217G2-40301	18	222A2-42511	31
216G5-22081	114	216G7-42011	160	217G2-42021	22	222A2-42511	32
216G5-22101	107	216G7-42011	161	217M1-02031	3	222A5-52111	122
216G5-32201	112	216G7-52051	124	217M1-02402	3	222A6-42451	133
216G5-32311	112	216G7-52051	125	217W2-10001	171	222A6-42461	133
216G5-32321	112	216G7-52121	171	218G2-22001	10	222A9-32011	106
216G5-32331	112	216G7-52201	126	218G2-22051	10	222A9-32011	106
216G5-32341	112	216G7-52201	171	218G2-42001	21	222Q9-12011	174
216G5-42011	112	216G8-12101	198	218G5-10111	100	22208-40031	188
216G6-32101	128	216G8-33351	201	218G5-10121	100	22208-40031	195
216G6-42451	132	216G8-33361	186	218G5-10121	100	22208-40031	203
216G6-42481	132	216G8-33361	193	218G6-40521	132	22214-30321	72
216G6-42541	97	216G8-33361	201	218G6-42302	136	22214-30321	73
216G6-42541	98	216G8-33361	201	218G6-42451	132	22214-30321	74
216G6-42541	132	216G8-33371	186	218G6-42471	132	22216-30051	129
216G6-42911	136	216G8-33371	193	218H5-42521	114	22218-40191	188
216G6-42931	136	216G8-33371	201	218M5-10401	97	22218-40191	195
216G6-43231	122	216G8-33371	201	218M5-12501	97	22218-40191	203
216G6-43241	112	216G8-33401	186	218M5-12501	98	22218-40191	204
216G6-43241	113	216G8-33401	193	22018-30064	193	22218-42111	188
216G6-43241	114	216G8-33401	201	22018-30065	186	22218-42111	195
216G6-43241	115	216G8-42111	197	22132-40041	29	22218-42111	203
216G6-43561	131	216G8-52201	172	22132-40041	30	22218-42111	204
216G6-52231	137	216G8-52301	172	22132-40041	31	22252-32241	12
216G6-52271	137	216G8-52301	186	22132-40041	32	22252-32241	13
216G6-52291	132	216G8-52301	193	22132-40202	29	22252-32251	7
216G6-52291	137	216G8-52301	201	22132-40202	30	22252-32251	12
216G7-32001	150	216G8-53001	173	22132-40202	31	22252-32251	13
216G7-32001	151	216G8-53011	173	22132-40202	32	22252-32251	112
216G7-32001	152	216G8-53051	173	22192-22091	11	22252-32251	113
216G7-32001	153	216G9-12013	174	22192-42411	29	22252-32251	114
216G7-32011	112	216G9-12023	174	22192-42411	30	22252-32251	115
216G7-32011	113	216G9-12033	174	22192-42411	31	22256-42001	9
216G7-32011	114	216G9-12052	175	22192-42411	32	22256-42001	29
216G7-32011	115	216G9-12062	175	22193-03001	64	22256-42001	30
216G7-32011	150	216G9-12071	175	22197-52091	63	22256-42001	31
216G7-32011	151	216G9-12071	176	22197-60231	68	22256-42001	32
216G7-32011	152	216G9-12071	177	22199-12401	51	224G5-42061	112
216G7-32011	153	216G9-12071	178	22199-12401	72	224G5-42061	113
216G7-32021	150	216G9-12071	179	22199-12401	73	224G5-42061	114
216G7-32021	151	216G9-12071	180	22199-12401	74	224G5-42061	115
216G7-32021	152	216G9-12131	175	22199-12401	172	224T8-53011	173
216G7-32021	153	216G9-12131	176	22199-12401	172	224W4-30341	93
216G7-32041	150	216G9-12131	177	22199-22251	181	224W4-30341	95
216G7-32041	151	216G9-12131	178	22199-22251	181	224W5-30202	113
216G7-32041	152	216G9-12131	179	222A2-10211	5	224W5-30202	115
216G7-32041	153	216G9-12131	180	222A2-10211	6	224W5-32401	113
216G7-40012	159	216G9-32001	138	222A2-42031	18	224W5-32401	115

Part No.	Fig.No.	Part No.	Fig.No.	Part No.	Fig.No.	Part No.	Fig.No.
224W5-32421	113	22438-45831	195	22655-42591	114	229F6-42211	141
224W5-32421	115	22438-45831	203	22655-42591	115	229G7-82011	171
224W5-32441	113	22438-45851	188	22672-42501	33	229G7-82051	171
224W5-32441	115	22438-45851	204	22672-42501	34	229G7-82051	171
224W5-32451	113	22438-45871	188	22672-42501	35	229G7-82101	171
224W5-32451	115	22438-45871	195	22679-12102	182	229L0-51201	196
224W5-32461	113	22438-45891	188	22679-43831	196	229L0-51211	196
224W5-32461	115	22438-45891	188	22679-43831	204	229L0-51221	196
224W5-32471	113	22438-45911	203	22679-47301	33	229L0-51231	196
224W5-32471	115	22438-45911	204	22679-47301	34	229L0-51241	196
224W5-32481	113	22438-45931	195	22679-47301	35	229L0-51251	196
224W5-32481	115	22438-45931	204	22679-47301	36	229L0-51261	196
224W5-32491	113	22438-45971	188	22679-47301	47	229L0-51271	196
224W5-32491	115	22438-45971	195	22679-47301	48	229L0-51281	196
224W5-32501	113	22438-45991	204	22679-47301	101	229L0-51291	196
224W5-32501	115	22438-46011	188	22717-40061	159	229L0-51301	196
224W5-32511	113	22438-46011	203	22717-40061	160	229L0-51311	196
224W5-32511	115	22438-46031	195	22717-40061	161	229L0-51321	196
224W5-32521	113	22438-46071	188	22717-40061	162	229L0-51331	196
224W5-32521	115	22438-46071	203	22717-40081	188	229L0-51341	196
224W5-32551	113	22438-46071	204	22777-60301	158	229L0-51351	196
224W5-32551	115	22438-46111	188	228U7-62221	170	229L0-51361	196
224W5-42401	113	22438-46151	188	229F0-91001	197	229L0-51371	196
224W5-42401	115	22438-46151	195	229F0-91001	205	229L0-51381	196
224W5-42431	113	22438-46171	204	229F0-94001	205	229L0-82551	195
224W5-42431	115	22438-46231	204	229F2-22071	127	229L0-82551	203
224W7-60311	113	22438-46251	195	229F2-22151	124	22959-12052	176
224W7-60311	115	22438-46271	188	229F2-22151	125	22959-12052	178
224W7-62701	94	22438-46371	188	229F2-22161	124	230C1-02041	100
22438-45451	195	22439-44031	78	229F2-22161	125	230C1-02041	101
22438-45491	203	22439-44031	79	229F2-22171	127	230C1-02041	102
22438-45511	195	22439-44031	85	229F2-42141	99	230C1-02041	137
22438-45531	195	22439-44031	85	229F2-42141	99	230C2-42201	26
22438-45551	188	225A7-62021	148	229F2-42141	102	230C2-42301	22
22438-45551	203	225R6-32001	130	229F2-42141	135	230C5-55021	122
22438-45571	195	225R9-12001	176	229F2-42161	49	230C5-55031	122
22438-45591	188	225R9-12031	176	229F2-42421	18	230C5-55041	122
22438-45591	195	225R9-12052	176	229F2-42421	18	230C5-55051	122
22438-45591	203	225R9-12071	176	229F2-42431	18	230C5-55061	122
22438-45611	195	225R9-12081	176	229F6-42201	19	230C5-55071	122
22438-45651	188	225R9-12091	176	229F6-42201	20	230C5-55081	122
22438-45651	195	225R9-12101	130	229F6-42201	40	230C5-55101	122
22438-45651	203	225R9-12112	176	229F6-42201	139	230C5-55111	122
22438-45671	195	225R9-12142	174	229F6-42201	139	230C5-55121	122
22438-45671	204	225T9-12011	174	229F6-42201	139	231A0-82001	195
22438-45691	188	22517-40051	159	229F6-42201	139	231A0-82001	203
22438-45691	188	22517-40051	160	229F6-42201	139	231A8-51001	173
22438-45691	203	22517-40051	161	229F6-42201	139	231A8-51011	173
22438-45711	195	22517-40051	162	229F6-42201	139	231A8-51011	173
22438-45711	204	22517-40051	188	229F6-42201	141	231A8-51011	173
22438-45751	188	22548-34031	184	229F6-42201	141	231A8-51011	173
22438-45751	195	22548-34031	191	229F6-42201	142	232A8-42201	188
22438-45751	195	22548-34031	199	229F6-42211	40	232A8-42201	196
22438-45751	195	22548-34051	184	229F6-42211	139	232A8-42201	204
22438-45751	203	22548-34051	191	229F6-42211	139	232A8-42201	204
22438-45751	203	22548-34051	199	229F6-42211	139	232L8-42601	204
22438-45751	204	22548-34061	184	229F6-42211	139	232L8-42601	204
22438-45791	188	22548-34061	191	229F6-42211	139	232L8-42621	204
22438-45811	188	22548-34061	199	229F6-42211	139	232L8-42621	204
22438-45811	204	22655-42591	113	229F6-42211	141	232L8-42631	204

PARTS NUMBER INDEX

Part No.	Fig.No.	Part No.	Fig.No.	Part No.	Fig.No.	Part No.	Fig.No.
232L8-42631	204	234A7-62101	165	234F8-10511	190	234F8-22111	200
232L8-49801	204	234A7-62201	164	234F8-10511	198	234F8-22121	185
232L8-49801	204	234A7-62201	165	234F8-10521	183	234F8-22121	192
232W9-12001	176	234A8-02001	186	234F8-10521	190	234F8-22121	200
232W9-12011	176	234A8-02001	193	234F8-10521	198	234F8-22201	185
232W9-12021	176	234A8-02101	189	234F8-10531	183	234F8-22201	192
232W9-12051	174	234A8-02101	197	234F8-10531	190	234F8-22201	200
232W9-12101	176	234A8-02201	189	234F8-10531	198	234F8-41001	189
232W9-12111	176	234A8-40611	196	234F8-10541	183	234F8-41001	197
23200-62171	205	234A8-40611	196	234F8-10541	190	234F8-41001	205
23200-72211	201	234A8-40701	189	234F8-10541	198	234G3-02001	64
23200-72221	201	234A8-40701	197	234F8-10551	183	234H7-60104	171
23232-42072	25	234A8-40701	205	234F8-10551	190	234H7-60301	164
23232-42072	26	234A8-41101	189	234F8-10551	198	234H7-60301	165
23235-40091	120	234A8-41101	197	234F8-10561	183	234H7-62171	171
23302-42311	33	234A8-41101	205	234F8-10561	190	234H7-62291	171
23302-42311	34	234A8-42551	188	234F8-10561	198	234H7-62301	149
23302-42311	35	234A8-42551	196	234F8-10571	183	234H7-62351	149
23322-22011	11	234A8-42551	204	234F8-10571	190	23452-42181	22
234A0-52611	195	234A8-42551	204	234F8-10571	198	23453-02071	64
234A0-52611	196	234A8-42561	188	234F8-10581	183	23453-02091	64
234A0-52611	196	234A8-42561	196	234F8-10581	190	23453-02131	64
234A0-52611	203	234A8-42561	204	234F8-10581	198	23455-42021	116
234A0-62051	197	234A8-42561	204	234F8-10591	183	23455-42021	117
234A0-62111	197	234A8-42571	188	234F8-10591	190	23455-42021	118
234A0-62111	205	234A8-42571	196	234F8-10591	198	23455-42021	119
234A1-00101	2	234A8-42571	204	234F8-10601	183	23456-42181	112
234A1-00111	2	234A8-42571	204	234F8-10601	190	23456-42181	113
234A1-00121	2	234A8-42602	189	234F8-10601	198	23456-42181	115
234A1-02001	3	234A8-42602	197	234F8-10611	183	23456-42181	132
234A1-02071	1	234A8-42602	205	234F8-10611	190	23457-42041	160
234A2-12201	5	234A8-42611	189	234F8-10611	198	23457-42041	161
234A2-12201	6	234A8-42611	197	234F8-10621	183	23457-60301	68
234A2-12211	5	234A8-42611	205	234F8-10621	190	23457-60311	68
234A2-12211	6	234A8-42622	189	234F8-10621	198	23458-32052	184
234A2-42301	28	234A8-42622	197	234F8-10631	183	23458-32052	191
234A4-30001	72	234A8-42622	205	234F8-10631	190	23458-32052	199
234A4-30001	74	234A8-43051	205	234F8-10631	198	23467-82041	170
234A4-30111	72	234A8-43501	188	234F8-10641	183	23467-82041	171
234A4-30111	74	234A8-43501	195	234F8-10641	190	235C2-40301	21
234A4-32261	72	234A8-43501	203	234F8-10641	198	236A5-10342	99
234A4-32261	74	234A8-50103	172	234F8-10651	183	236A5-10342	99
234A4-32271	72	234A8-50113	172	234F8-10651	190	236A5-10352	99
234A4-32271	74	234A8-52162	172	234F8-10651	198	236A5-10352	99
234A6-42042	137	234A8-52172	172	234F8-10661	183	236A9-19801	174
234A6-42072	137	234B7-82111	170	234F8-10661	190	236A9-19801	175
234A6-43121	133	234F0-52501	196	234F8-10661	198	236A9-19811	174
234A6-43121	134	234F0-52501	196	234F8-10671	183	236A9-19811	174
234A7-30202	150	234F0-59801	196	234F8-10671	190	236A9-19811	174
234A7-30302	151	234F0-59801	196	234F8-10671	198	236A9-19811	174
234A7-30402	152	234F0-82401	204	234F8-10681	183	236A9-19811	174
234A7-30502	153	234F0-82401	204	234F8-10681	190	236A9-19811	176
234A7-32001	150	234F4-22101	71	234F8-10681	198	236A9-19811	177
234A7-32001	151	234F4-22101	71	234F8-12101	183	236A9-19811	178
234A7-32001	152	234F4-40302	86	234F8-12101	190	236A9-19811	179
234A7-32001	153	234F4-40302	88	234F8-22101	185	236A9-19811	180
234A7-40052	162	234F8-10501	183	234F8-22101	192	236L2-10102	6
234A7-42011	162	234F8-10501	190	234F8-22101	200	23647-40041	159
234A7-52101	126	234F8-10501	198	234F8-22111	185	23647-40121	114
234A7-62101	164	234F8-10511	183	234F8-22111	192	23648-50161	196

PARTS NUMBER INDEX

Part No.	Fig.No.	Part No.	Fig.No.	Part No.	Fig.No.	Part No.	Fig.No.
23651-02001	1	23678-40150	189	238F5-40501	110	239A4-22001	69
23651-02011	1	23678-40150	205	238F5-40501	111	239A4-50201	93
23652-12051	7	23678-40160	189	238F5-42421	116	239A4-50201	95
23652-12051	12	23678-40160	205	238F5-42421	117	239A5-10111	100
23652-12051	13	23678-40165	189	238F5-42421	118	239A5-10121	100
23652-22121	3	23678-40165	205	238F5-42421	119	239A5-10342	99
23652-44001	25	23678-40170	189	238F5-42601	112	239A5-10352	99
23652-44001	26	23678-40170	205	238F5-42601	113	239A5-12401	100
23652-44001	43	23678-40175	189	238F5-42601	114	239A5-12401	101
23653-02001	64	23678-40185	189	238F5-42601	115	239A5-12401	102
23654-32041	72	23678-40185	205	238F9-12071	175	239A5-12411	100
23654-32041	73	23678-40190	189	238G2-22021	127	239A5-12411	101
23654-32041	74	23678-40190	189	238G2-22031	127	239A5-12411	102
23654-32081	72	23678-40190	205	238G2-22101	127	239A5-12501	103
23654-32081	74	23678-40195	205	238G5-40021	110	239A5-12521	103
23654-32161	72	23678-40200	189	238G5-40031	110	239A5-20302	107
23654-32161	73	23678-40200	189	238G5-40202	110	239A5-20402	107
23654-32161	74	23678-40210	189	238G6-12401	75	239A5-22151	107
23654-34051	76	23678-40210	205	238S5-40202	109	239A5-22253	107
23654-52021	96	23678-40210	205	238S5-40202	111	239A5-40102	112
23655-22101	132	23678-40215	189	23813-00071	76	239A5-40102	113
23655-22101	146	23678-40215	205	23813-00081	76	239A5-40102	114
23656-83001	146	23678-40230	189	23819-20011	181	239A5-40102	115
23656-83011	146	23678-40230	205	23819-20011	181	239A5-40102	121
23656-83051	146	23678-40240	189	23819-20021	181	239A5-40501	112
23656-83061	146	23678-40245	189	23819-20021	181	239A5-40641	121
23657-42131	160	23678-40255	189	23870-52821	56	239A5-42071	116
23657-60311	164	23678-40255	205	239A0-90161	205	239A5-42071	117
23657-60311	165	23678-40255	205	239A1-02511	2	239A5-42071	118
23658-42531	188	23678-40265	189	239A2-12021	7	239A5-42071	119
23658-42531	204	23678-40270	189	239A2-40501	19	239A5-42101	121
23658-52101	172	23678-40275	205	239A2-42101	22	239A5-42121	121
23658-52101	172	23678-40280	189	239A2-42201	23	239A5-42161	121
23658-52401	172	23678-40290	205	239A2-42221	27	239A5-42181	121
23658-52401	172	23678-40310	189	239A2-52001	50	239A5-42191	121
23659-12101	174	23678-40335	189	239A2-52001	62	239A5-42221	121
23670-73581	201	23678-42301	196	239A2-52061	50	239A5-42251	121
23678-06002	186	23678-42301	196	239A2-52061	62	239A5-42271	121
23678-06002	193	23678-42401	189	239A4-12102	66	239A5-42281	121
23678-06002	201	23678-42401	205	239A4-12112	66	239A5-42291	121
23678-40060	189	23678-53001	173	239A4-12121	66	239A5-42301	120
23678-40070	189	23678-53101	173	239A4-12121	70	239A5-42311	121
23678-40080	205	23678-53101	173	239A4-12131	66	239A5-42321	121
23678-40085	189	23679-45051	189	239A4-12201	67	239A5-42351	116
23678-40095	189	23679-45051	205	239A4-12201	69	239A5-42351	117
23678-40095	205	237A2-10102	5	239A4-12211	67	239A5-42351	118
23678-40105	205	237H2-10102	6	239A4-12211	68	239A5-42351	119
23678-40110	189	23772-12071	5	239A4-12211	69	239A5-42381	21
23678-40110	189	23772-12071	6	239A4-12402	66	239A5-42381	46
23678-40110	205	23775-42101	113	239A4-12411	66	239A5-42381	48
23678-40120	189	23775-42101	114	239A4-12431	66	239A5-42381	112
23678-40120	205	23775-42101	115	239A4-12441	66	239A5-42381	113
23678-40125	189	238A2-42151	22	239A4-12501	19	239A5-42381	114
23678-40125	189	238F5-40061	108	239A4-12501	20	239A5-42381	115
23678-40130	205	238F5-40061	109	239A4-12511	19	239A5-42401	112
23678-40135	189	238F5-40061	111	239A4-12511	20	239A5-42411	112
23678-40145	189	238F5-40071	108	239A4-12521	19	239A5-42451	116
23678-40145	189	238F5-40202	108	239A4-12521	20	239A5-42461	116
23678-40145	205	238F5-40501	108	239A4-12541	19	239A5-42471	116
23678-40145	205	238F5-40501	109	239A4-22001	67	239A5-50101	122

PARTS NUMBER INDEX

Part No.	Fig.No.	Part No.	Fig.No.	Part No.	Fig.No.	Part No.	Fig.No.
239A6-40201	131	239B5-42601	119	239F8-30162	186	23918-52131	195
239A6-40301	133	239B5-42621	117	239F8-30172	186	23918-52131	203
239A6-40502	132	239B5-42621	118	239F8-30182	186	23918-52161	196
239A6-42001	131	239B5-42621	119	239F8-30202	186	23918-52161	196
239A6-42251	132	239B6-50302	137	239F8-30212	186	23918-52171	196
239A6-42251	132	239B6-52231	137	239F8-30222	186	23918-52171	196
239A6-42291	133	239B6-52601	137	239F8-30232	186	242F1-00101	1
239A6-43001	131	239F0-40101	193	239F8-30242	186	242F1-02001	1
239A6-43011	131	239F0-40111	193	239F8-30252	186	242F1-02051	1
239A6-43101	131	239F0-40121	193	239F8-30262	186	242F1-02101	3
239A6-43111	131	239F0-40131	193	239F8-30272	186	242F1-02111	3
239A6-50112	137	239F0-40141	193	239F8-30282	186	242F1-02121	3
239A6-50302	137	239F0-40151	193	239F8-30292	186	242F2-12001	5
239A6-52131	137	239F0-40161	193	239F8-30302	186	242F2-12001	6
239A6-52141	137	239F0-40171	193	239F8-30312	186	242F2-12051	5
239A6-52171	137	239F0-40181	193	239F8-30322	186	242F2-12051	6
239A6-52231	137	239F0-40191	193	239F8-30332	186	242F2-12201	8
239A6-52601	137	239F0-40201	193	239F8-30342	186	242F2-22001	11
239A6-52601	137	239F0-40211	193	239F8-30352	186	242F2-42001	21
239A7-52001	124	239F0-40221	193	239F8-30362	186	242F2-42151	22
239A7-60301	166	239F0-40231	193	239F8-30372	186	242F2-42251	25
239A7-60301	168	239F0-40241	193	239F8-30382	186	242F2-42301	21
239A7-60311	166	239F0-40251	193	239F9-12001	174	242F2-42311	21
239A7-60311	168	239F0-40261	193	239F9-12011	174	242F2-42321	21
239A7-62112	169	239F0-40271	193	239F9-12101	174	242F5-22001	107
239A7-62121	169	239F0-40281	193	239G5-40101	114	242F6-80101	144
239A7-62131	169	239F0-60001	191	239G5-40502	114	242F6-80201	145
239A7-62211	169	239F0-70201	201	239H1-02001	2	242F6-82001	144
239A7-62251	169	239F0-70211	201	239H1-02001	2	242F6-82001	145
239A7-62261	169	239F0-70221	201	239H5-40191	113	242F6-82011	144
239A7-62351	169	239F0-70231	201	239H5-40191	115	242F6-82011	145
239A7-62401	169	239F0-70241	201	239H5-40201	113	242F6-82021	144
239A9-12301	175	239F0-70251	201	239H5-40201	115	242F6-82021	145
239A9-92001	106	239F0-70261	201	239H5-40211	113	242F6-82031	144
239A9-92001	106	239F0-70271	201	239H5-40211	115	242F6-82031	145
239B2-42201	24	239F0-70281	201	239H5-40311	113	242F6-82041	144
239B2-42301	22	239F0-70291	201	239H5-40311	115	242F6-82041	145
239B5-42201	108	239F0-70301	201	239H5-40411	109	242F6-82051	144
239B5-42201	109	239F0-90101	199	239H5-40411	111	242F6-82051	145
239B5-42201	110	239F0-92091	205	239H5-42301	113	242F6-82061	144
239B5-42201	111	239F0-92141	205	239H5-42301	115	242F6-82061	145
239B5-42211	108	239F5-42601	116	239H5-42371	113	242F6-82071	144
239B5-42211	109	239F5-42621	116	239H5-42371	115	242F6-82071	145
239B5-42211	110	239F8-20002	184	239H5-42381	117	242F6-82081	144
239B5-42211	111	239F8-30002	186	239H5-42381	119	242F6-82081	145
239B5-42221	108	239F8-30012	186	239H5-42451	113	242F6-82091	144
239B5-42221	108	239F8-30022	186	239H5-42451	115	242F6-82091	145
239B5-42221	109	239F8-30032	186	239H5-42461	113	242F6-82101	144
239B5-42221	109	239F8-30042	186	239H5-42461	115	242F6-82101	145
239B5-42221	110	239F8-30052	186	239H7-52001	124	242F6-82111	144
239B5-42221	110	239F8-30062	186	239H7-52001	125	242F6-82111	145
239B5-42221	111	239F8-30072	186	239H7-60201	149	242F6-82121	144
239B5-42221	111	239F8-30082	186	239H7-60401	166	242F6-82121	145
239B5-42421	116	239F8-30092	186	239H7-60401	166	242F6-82131	144
239B5-42421	117	239F8-30102	186	239H7-60401	168	242F6-82141	144
239B5-42421	118	239F8-30112	186	239H7-82001	171	242F6-82151	144
239B5-42421	119	239F8-30122	186	239T9-12071	176	242F6-82151	145
239B5-42501	114	239F8-30132	186	23913-02041	76	242F6-82161	144
239B5-42601	117	239F8-30142	186	23917-42191	196	242F6-82161	145
239B5-42601	118	239F8-30152	186	23917-42191	204	242F6-82171	144

PARTS NUMBER INDEX

Part No.	Fig.No.	Part No.	Fig.No.	Part No.	Fig.No.	Part No.	Fig.No.
242F6-82171	145	24452-52002	64	25594-52431	96	27042-42312	167
242F6-82181	144	24453-02031	64	25595-42311	112	27042-42312	168
242F6-82181	145	24453-02061	64	25595-42311	121	27042-43501	38
242F6-82191	144	24453-02102	64	25595-42381	121	27042-64311	45
242F6-82191	145	24453-02131	64	25595-42391	121	27049-12172	174
242F6-82201	144	24454-30512	72	25595-42411	121	271A7-52301	124
242F6-82211	144	24454-30512	74	25595-42421	121	271A7-52301	125
242F6-82221	144	24454-32161	72	25595-42452	112	271A7-60351	148
242F6-82231	144	24454-32161	74	25595-42452	112	271A9-12191	182
242F6-82241	144	24454-32232	72	25595-42491	112	271A9-12251	175
242F6-82241	145	24454-32232	73	25595-42491	113	271F4-12221	66
242F6-82251	144	24454-32232	74	25595-42491	114	271F4-12221	70
242F6-82261	144	24454-32391	72	25595-42491	115	271F4-12231	66
242F6-82261	145	24454-32391	74	25596-42361	29	271F4-12231	70
242F6-82271	144	24454-39812	72	25596-42361	29	271F4-12241	66
242F6-82281	144	24454-39812	74	25596-42361	31	271F4-12241	70
242F6-82291	144	24454-40201	78	25596-42361	32	272A8-52101	73
242F6-82291	145	24454-40201	79	25596-42361	132	272E7-52022	127
242F6-82301	144	24454-40201	85	25596-42361	132	272K8-52201	193
242F6-82311	144	24454-40211	78	25597-62211	67	272K8-52201	201
242F6-82321	144	24454-40211	79	25597-62211	69	273A9-12242	174
242F6-82331	144	24454-40211	85	256A1-08031	2	27397-52101	55
242F7-62001	164	24454-40211	85	256A2-42171	22	27415-52151	122
242G1-00101	1	24454-40221	78	256C5-12671	131	27419-12061	176
242G2-42251	26	24454-40221	79	256C7-42281	113	27419-12061	177
242P2-30101	12	24454-40221	85	256C7-42281	115	27419-12061	178
242S1-00101	1	24459-22011	181	256G1-08011	2	27419-12061	179
242S1-02001	1	24459-22011	181	256G1-08021	2	27419-12061	180
242S2-12201	9	24459-42291	204	25784-52342	94	27419-12062	175
242S2-52001	62	24459-42291	204	25785-43091	112	27419-12062	176
242S7-62001	165	24459-42381	195	25786-32031	128	27419-12071	176
24234-30551	71	24459-42381	203	25786-32031	130	27419-12071	177
24234-30551	71	24459-42391	188	25787-82081	170	27419-12071	178
24234-30551	72	24459-42391	195	25789-12051	175	27419-12071	179
24234-30551	74	24459-42391	203	25816-42761	135	27419-12071	180
24234-30561	72	24459-42391	204	25952-42311	31	27419-12072	175
24234-30561	74	24459-42951	189	25953-72001	65	27419-12072	176
24234-30561	93	24459-42951	197	25954-52061	93	27652-62211	28
24234-30561	95	24459-42951	205	25954-52061	95	27662-62711	132
24234-32411	72	24469-42701	94	25954-52071	93	27662-62721	100
24234-32411	74	24469-42721	195	25954-52071	95	27662-62721	102
24234-32421	72	24469-42721	203	25954-52081	93	27662-63041	132
24234-32421	74	24846-80302	146	25954-52081	95	277H7-60501	169
24320-52001	196	24846-82001	146	25954-52091	93	277H7-60601	158
24329-46201	189	24846-82011	146	25954-52091	95	277N0-82021	205
24329-46201	205	24846-82021	146	25957-62201	171	277P0-82501	195
24352-42521	21	24846-82031	146	25958-52201	94	277P0-82501	203
24389-46021	195	24846-82041	146	25958-52211	94	277P0-83001	204
24389-46021	203	24846-82051	146	25958-52221	94	277P0-92061	205
24450-52571	196	24868-42111	188	26062-42881	21	277P8-22051	184
24450-52571	196	24868-42111	196	26062-42881	33	277P8-22051	184
24450-52571	196	24868-42111	204	26062-42881	34	277P8-22051	186
24450-52571	196	24868-42111	204	26062-42881	35	277P8-22051	186
24450-82241	195	25303-02102	64	26062-42881	36	277P8-22051	191
24450-82241	203	25592-42081	22	26062-42881	46	277P8-22051	193
24450-82251	195	25592-42121	127	26062-42881	47	277P8-22051	193
24450-82251	203	25594-52141	67	26062-42881	48	277P8-22051	199
24450-92021	185	25594-52141	69	26602-42081	11	277P8-22051	201
24450-92021	192	25594-52362	93	27042-42312	107	277P8-22051	201
24450-92021	200	25594-52362	95	27042-42312	166	277P8-22051	201

PARTS NUMBER INDEX

Part No.	Fig.No.	Part No.	Fig.No.	Part No.	Fig.No.	Part No.	Fig.No.
277P8-22061	184	277T0-50391	195	277T0-51321	196	277T0-60391	197
277P8-22061	186	277T0-50401	195	277T0-51331	196	277T0-60401	197
277P8-22061	191	277T0-50411	195	277T0-51341	196	277T0-60411	197
277P8-22061	193	277T0-50421	195	277T0-51351	196	277T0-60421	197
277P8-22061	199	277T0-50431	195	277T0-51361	196	277T0-60431	197
277P8-22061	201	277T0-50441	195	277T0-51371	196	277T0-60441	197
277P8-22061	201	277T0-50451	195	277T0-51381	196	277T0-60451	197
277P8-22071	184	277T0-50461	195	277T0-51401	196	277T0-60461	197
277P8-22071	186	277T0-50471	195	277T0-51411	196	277T0-60471	197
277P8-22071	186	277T0-50481	195	277T0-51421	196	277T0-60481	197
277P8-22071	191	277T0-50501	195	277T0-51431	196	277T0-62051	197
277P8-22071	193	277T0-50511	195	277T0-51441	196	277T0-62071	197
277P8-22071	193	277T0-50521	195	277T0-51451	196	277T0-62071	205
277P8-22071	193	277T0-50531	195	277T0-51461	196	277T0-70401	201
277P8-22071	199	277T0-50541	195	277T0-51471	196	277T0-70411	201
277P8-22071	201	277T0-50551	195	277T0-51481	196	277T0-70421	201
277P8-22071	201	277T0-50561	195	277T0-51491	196	277T0-70431	201
277P8-22071	201	277T0-50571	195	277T0-51501	196	277T0-70441	201
277P8-22081	184	277T0-50581	195	277T0-51511	196	277T0-70451	201
277P8-22081	186	277T0-50591	195	277T0-51521	196	277T0-70461	201
277P8-22081	186	277T0-50601	195	277T0-51531	196	277T0-70471	201
277P8-22081	191	277T0-50611	195	277T0-51541	196	277T0-70481	201
277P8-22081	193	277T0-50621	195	277T0-51551	196	277T0-70491	201
277P8-22081	193	277T0-50631	195	277T0-51561	196	277T0-70501	201
277P8-22081	193	277T0-50641	195	277T0-51571	196	277T0-80001	203
277P8-22081	199	277T0-50651	195	277T0-51581	196	277T0-80011	203
277P8-22081	201	277T0-50661	195	277T0-51601	196	277T0-80021	203
277P8-22081	201	277T0-50671	195	277T0-51611	196	277T0-80031	203
277P8-22081	201	277T0-50681	195	277T0-51621	196	277T0-80041	203
277P8-32701	123	277T0-51001	196	277T0-51631	196	277T0-80051	203
277P8-32701	193	277T0-51011	196	277T0-51641	196	277T0-80061	203
277P8-32701	201	277T0-51021	196	277T0-51651	196	277T0-80071	203
277T0-50101	195	277T0-51031	196	277T0-51661	196	277T0-80081	203
277T0-50111	195	277T0-51041	196	277T0-51671	196	277T0-80091	203
277T0-50121	195	277T0-51051	196	277T0-51681	196	277T0-80101	203
277T0-50131	195	277T0-51061	196	277T0-51691	196	277T0-80301	203
277T0-50141	195	277T0-51071	196	277T0-51701	196	277T0-80311	203
277T0-50151	195	277T0-51081	196	277T0-51711	196	277T0-80321	203
277T0-50161	195	277T0-51091	196	277T0-51721	196	277T0-80331	203
277T0-50171	195	277T0-51101	196	277T0-51731	196	277T0-80341	203
277T0-50181	195	277T0-51111	196	277T0-51741	196	277T0-80351	203
277T0-50191	195	277T0-51121	196	277T0-51751	196	277T0-80361	203
277T0-50201	195	277T0-51131	196	277T0-51761	196	277T0-80371	203
277T0-50211	195	277T0-51141	196	277T0-51771	196	277T0-80381	203
277T0-50221	195	277T0-51151	196	277T0-51781	196	277T0-80391	203
277T0-50231	195	277T0-51161	196	277T0-52401	195	277T0-80401	203
277T0-50241	195	277T0-51171	196	277T0-52401	203	277T0-80501	203
277T0-50251	195	277T0-51181	196	277T0-52411	195	277T0-80511	203
277T0-50261	195	277T0-51201	196	277T0-52411	203	277T0-80521	203
277T0-50271	195	277T0-51211	196	277T0-59801	195	277T0-80531	203
277T0-50281	195	277T0-51221	196	277T0-59801	203	277T0-80541	203
277T0-50301	195	277T0-51231	196	277T0-60301	197	277T0-80551	203
277T0-50311	195	277T0-51241	196	277T0-60311	197	277T0-80561	203
277T0-50321	195	277T0-51251	196	277T0-60321	197	277T0-80571	203
277T0-50331	195	277T0-51261	196	277T0-60331	197	277T0-80581	203
277T0-50341	195	277T0-51271	196	277T0-60341	197	277T0-80591	203
277T0-50351	195	277T0-51281	196	277T0-60351	197	277T0-80601	203
277T0-50361	195	277T0-51291	196	277T0-60361	197	277T0-81002	204
277T0-50371	195	277T0-51301	196	277T0-60371	197	277T0-81012	204
277T0-50381	195	277T0-51311	196	277T0-60381	197	277T0-81022	204

Part No.	Fig.No.	Part No.	Fig.No.	Part No.	Fig.No.	Part No.	Fig.No.
277T0-81032	204	277T0-81882	204	27732-42311	35	509P5-92511	13
277T0-81042	204	277T0-81892	204	27732-42311	36	509P5-92521	13
277T0-81052	204	277T0-81902	204	27732-42311	37	509P9-90101	32
277T0-81062	204	277T0-90151	205	27732-42311	40	510F0-82032	14
277T0-81072	204	277T8-40001	188	27732-42311	42	510F0-82032	15
277T0-81082	204	277T8-40011	188	27732-42311	47	51152-82012	176
277T0-81092	204	277T8-40021	188	27732-42311	48	51152-82012	178
277T0-81102	204	277T8-40031	188	27912-62441	122	51152-82022	176
277T0-81202	204	277T8-40041	188	27970-53141	196	51152-82022	178
277T0-81212	204	277T8-40051	188	27970-53141	196	51153-02001	178
277T0-81222	204	277T8-40061	188	27978-42371	204	51233-02021	178
277T0-81232	204	277T8-40071	188	27978-42371	204	514A0-82022	14
277T0-81242	204	277T8-40081	188	27978-42371	204	514A0-82081	14
277T0-81252	204	277T8-40091	188	27978-42371	204	514A0-82251	14
277T0-81262	204	277T8-40101	188	27978-42411	204	514A0-82251	15
277T0-81272	204	277T8-40111	188	27978-42411	204	514A1-41001	36
277T0-81282	204	277T8-40121	188	27978-42421	204	514A1-41001	47
277T0-81292	204	277T8-40131	188	27978-42421	204	514A1-41001	48
277T0-81302	204	277T8-40141	188	27979-43101	189	514A1-41011	36
277T0-81401	204	277T8-40151	188	27979-43101	197	514A1-41021	36
277T0-81401	204	277T8-40161	188	27979-43101	205	514A1-41031	36
277T0-81411	204	277T8-40171	188	27980-82701	204	514A1-42041	36
277T0-81411	204	277T8-40181	188	27980-82701	204	514A1-42041	38
277T0-81421	204	277W0-40302	193	27980-82711	204	514A1-42041	40
277T0-81421	204	277W0-40312	193	27980-82711	204	514A1-42191	36
277T0-81431	204	277W0-40322	193	280C2-42301	20	514A1-42191	47
277T0-81431	204	277W0-40332	193	280C2-42311	20	514A1-42191	48
277T0-81441	204	277W0-40342	193	280C2-42331	19	514A2-40104	73
277T0-81441	204	277W0-40352	193	280C2-42331	20	514A2-40462	94
277T0-81451	204	277W0-40362	193	280C2-42341	20	514A2-42481	73
277T0-81451	204	277W0-40372	193	280C2-42351	19	514A2-42721	73
277T0-81461	204	277W0-40382	193	280C2-42351	20	514A2-44022	73
277T0-81461	204	277W0-40392	193	281E7-42101	163	514A2-44022	73
277T0-81471	204	277W0-40402	193	3956323	41	514A2-44022	73
277T0-81471	204	277W0-40412	193	509K2-30101	20	514A2-44071	73
277T0-81481	204	277W0-40422	193	509M5-92381	16	514A2-44071	73
277T0-81481	204	277W0-40432	193	509P5-90101	13	514A2-44071	73
277T0-81491	204	277W0-40442	193	509P5-92001	13	514A2-49803	94
277T0-81491	204	277W0-40452	193	509P5-92011	13	514A2-72411	163
277T0-81501	204	277W0-40462	193	509P5-92021	13	514A2-72411	163
277T0-81501	204	277W0-40472	193	509P5-92031	13	514A2-72411	163
277T0-81602	204	277W0-40482	193	509P5-92041	13	514A2-82012	176
277T0-81612	204	277W0-70602	201	509P5-92051	13	514A3-02002	178
277T0-81622	204	277W0-70612	201	509P5-92061	13	514A3-04201	188
277T0-81632	204	277W0-70622	201	509P5-92071	13	514A3-04211	188
277T0-81642	204	277W0-70632	201	509P5-92081	13	514A3-71702	184
277T0-81652	204	277W0-70642	201	509P5-92091	13	514A3-71702	191
277T0-81662	204	277W0-70652	201	509P5-92101	13	514A3-71702	199
277T0-81672	204	277W0-70662	201	509P5-92111	13	514A3-72052	72
277T0-81682	204	277W0-70672	201	509P5-92121	13	514A3-72052	73
277T0-81692	204	277W0-70682	201	509P5-92181	13	514A3-72052	73
277T0-81702	204	277W0-70692	201	509P5-92201	13	514A3-72052	73
277T0-81802	204	277W0-70702	201	509P5-92211	13	514A3-72052	74
277T0-81812	204	27717-52081	171	509P5-92231	13	514A3-72062	72
277T0-81822	204	27732-42221	104	509P5-92241	13	514A3-72062	73
277T0-81832	204	27732-42311	28	509P5-92351	17	514A3-72062	73
277T0-81842	204	27732-42311	32	509P5-92451	16	514A3-72062	73
277T0-81852	204	27732-42311	33	509P5-92471	16	514A3-72062	74
277T0-81862	204	27732-42311	33	509P5-92481	16	514A3-72091	27
277T0-81872	204	27732-42311	34	509P5-92491	13	514A3-72101	76

PARTS NUMBER INDEX

Part No.	Fig.No.	Part No.	Fig.No.	Part No.	Fig.No.	Part No.	Fig.No.
514A3-72201	72	514T6-82021	82	516G3-82121	178	516G7-50201	141
514A3-72201	74	514T7-20201	38	516G3-82131	178	516G7-50211	142
514A3-72211	72	514T7-22061	38	516G3-82141	178	516G7-50301	42
514A3-72211	73	516G0-62001	2	516G3-82141	180	516G7-50401	140
514A3-72211	73	516G1-32002	28	516G3-82151	178	516G8-92001	36
514A3-72211	74	516G1-32012	28	516G3-82161	178	516G9-10101	37
514A3-82002	176	516G1-42021	13	516G3-82171	178	516G9-12011	37
514A3-82002	177	516G1-42021	140	516G3-82181	180	516G9-92101	32
514A3-82002	178	516G1-42021	141	516G3-82191	180	516M5-12311	106
514A3-82002	179	516G1-42021	142	516G3-82201	178	516M5-12311	106
514A3-82002	180	516G1-42101	33	516G3-82211	176	517G6-20101	18
514A3-82012	176	516G1-42101	35	516G3-82211	178	517G6-20201	18
514A3-82012	178	516G1-42101	40	516G3-82221	176	517H8-80101	18
514A3-82022	176	516G1-42111	33	516G3-82221	178	518G0-90111	100
514A3-82022	178	516G1-42111	34	516G3-82232	178	518G0-90211	101
514A3-82032	178	516G1-42111	34	516G3-82241	178	518G2-80101	101
514A3-82042	178	516G1-42111	35	516G3-82241	180	518G2-80121	101
514A3-82042	180	516G1-42121	35	516G3-82251	178	518G2-80121	101
514A3-82052	178	516G1-42151	33	516G3-82261	178	518G2-80231	98
514A3-82062	178	516G1-42151	34	516G3-82271	178	518G8-12001	10
514A3-82072	178	516G1-42151	35	516G3-82281	180	518G8-12051	10
514A3-82301	174	516G1-42211	31	516G3-82291	180	518G8-12101	10
514A3-82301	199	516G1-42211	36	516G3-82801	176	521A2-42001	22
514A3-82321	174	516G1-42211	40	516G3-82801	177	521A2-42061	43
514A3-82331	174	516G1-42251	139	516G3-82801	178	522A1-10201	2
514A3-82331	199	516G1-42251	139	516G3-82801	179	522A1-42051	33
514A3-82341	174	516G1-42251	139	516G3-82801	180	522A1-42051	34
514A3-82341	199	516G1-42251	139	516G3-82811	178	522A1-42051	35
514A3-82351	174	516G1-42251	139	516G3-82821	176	522A1-42061	33
514A3-82351	199	516G1-42251	139	516G3-82821	178	522A1-42061	34
514A3-82361	174	516G2-40451	68	516G3-82831	176	522A1-42061	35
514A3-82361	199	516G2-72051	128	516G3-82831	178	522A2-10401	113
514A3-82371	174	516G2-72071	14	516G3-82841	178	522A2-10401	115
514A3-82371	199	516G2-72071	15	516G3-82851	178	522A2-11601	113
514A3-82381	174	516G2-72701	176	516G3-82851	180	522A2-11601	115
514A3-82381	199	516G2-72701	177	516G3-82861	178	522A2-18011	113
514A3-82391	174	516G2-72701	178	516G3-82871	178	522A2-18011	115
514A3-82391	199	516G2-72701	179	516G3-82881	178	522A2-18021	113
514A5-12011	99	516G2-72701	180	516G3-82891	180	522A2-18021	115
514A5-12011	99	516G2-72711	176	516G3-82901	180	522A2-18031	113
514A5-12011	100	516G2-72711	177	516G5-12511	106	522A2-18031	115
514A5-12011	100	516G2-72711	178	516G5-13051	99	522A2-18041	113
514A5-12011	101	516G2-72711	179	516G5-13151	99	522A2-18041	115
514A5-12011	102	516G2-72711	180	516G5-13511	106	522A2-18051	113
514A5-12011	136	516G2-82051	176	516G5-13511	106	522A2-18051	115
514A5-12021	106	516G2-82061	176	516G6-12051	41	522A2-18071	113
514A5-12701	70	516G3-82001	178	516G6-22011	49	522A2-18071	115
514A5-12701	131	516G3-82011	176	516G6-22031	18	522A2-18081	113
514A5-32341	40	516G3-82011	178	516G6-22031	18	522A2-18081	115
514A5-32341	40	516G3-82021	178	516G6-22051	18	522A2-18091	113
514J3-72051	76	516G3-82031	178	516G6-22051	18	522A2-18091	115
514J3-74061	188	516G3-82031	180	516G6-85011	92	522A2-18101	113
514J6-82201	87	516G3-82041	178	516G6-90401	140	522A2-18101	115
514J6-82201	89	516G3-82051	178	516G6-92001	44	522A2-18111	113
514J6-82211	87	516G3-82061	180	516G6-92011	44	522A2-18111	115
514J6-82211	89	516G3-82071	180	516G6-92022	44	522A2-18121	113
514J6-82211	91	516G3-82101	178	516G6-92031	44	522A2-18121	115
514J6-82231	91	516G3-82111	176	516G6-92151	44	522A2-18131	113
514T2-72061	101	516G3-82111	178	516G6-92201	44	522A2-18131	115
514T6-42001	146	516G3-82121	176	516G6-92211	44	522A2-18161	113

Part No.	Fig.No.	Part No.	Fig.No.	Part No.	Fig.No.	Part No.	Fig.No.
522A2-18161	115	522A3-83281	180	52672-72122	177	534A2-40502	151
522A2-18171	113	522A3-83421	178	52672-72122	178	534A2-40602	152
522A2-18171	115	522A3-83441	174	52672-72122	179	534A2-40602	152
522A2-18201	113	522A3-83461	178	52672-72122	180	534A2-40702	153
522A2-18201	115	522A3-83481	178	52672-82062	176	534A2-40702	153
522A2-18211	113	522A3-83621	178	52672-82073	176	534A2-74051	185
522A2-18211	115	522A3-83641	174	52691-92211	129	534A2-74051	192
522A2-18221	113	522A3-83661	178	52691-92221	129	534A2-74051	200
522A2-18221	115	522A3-83681	178	529F0-82101	14	534A2-74301	185
522A2-18281	113	522A3-83821	178	529F1-42201	36	534A2-74301	192
522A2-18281	115	522A3-83841	174	529F1-42251	36	534A2-74301	200
522A2-18301	113	522A3-83861	178	529F1-42251	47	534A3-04001	195
522A2-18301	115	522A3-83881	178	529F1-42251	48	534A3-04001	203
522A2-18311	113	522A7-22011	39	529F3-70401	159	534A3-70021	72
522A2-18311	115	522B0-92021	4	529F3-70411	160	534A3-70021	74
522A2-18321	113	522B0-92031	4	529F3-70411	161	534A3-70031	72
522A2-18321	115	522B0-92041	4	529F3-70421	162	534A3-70031	74
522A2-18331	113	522B0-92051	4	529F3-82041	180	534A3-70101	72
522A2-18331	115	522Q2-60502	65	529F3-82051	180	534A3-70101	74
522A2-18341	113	522Q2-60512	65	529F3-82061	180	534A3-72111	72
522A2-18341	115	522Q2-82051	174	529F3-82071	180	534A3-72111	74
522A2-18352	113	522Q6-80301	84	529F3-82081	174	534A3-72121	72
522A2-18352	115	522Q6-80311	84	529F3-82091	174	534A3-72121	74
522A2-18361	113	522Q6-80321	84	529F3-82101	174	534A3-82311	176
522A2-18361	115	522Q6-80402	90	529F3-82101	199	534A3-82311	177
522A2-18371	113	522Q6-80412	90	529F3-82111	174	534A3-82311	178
522A2-18371	115	522Q6-80422	90	529F3-82111	199	534A3-82311	179
522A2-18391	113	522Q6-82001	80	529F3-82161	180	534A3-82311	180
522A2-18391	115	522Q6-82011	80	529F3-82171	180	534A3-82321	178
522A2-18541	113	522Q6-82021	80	529F3-82242	180	534A3-82331	176
522A2-18541	115	523S2-42512	167	529F3-82252	180	534A3-82331	178
522A2-18551	113	52356-80302	86	529F7-22001	39	534A3-82341	176
522A2-18551	115	52356-80302	88	529F7-52241	46	534A3-82341	178
522A2-18561	113	52356-80302	90	529F7-52241	48	534A3-82351	178
522A2-18561	115	52356-80302	92	530C1-42001	33	534A3-82361	178
522A2-18571	113	524G2-10502	51	531A0-52521	30	534A3-82361	180
522A2-18571	115	524G3-62121	63	532B3-82201	8	534A3-82371	178
522A2-18581	113	524T3-84031	174	533A0-52051	32	534A3-82381	178
522A2-18581	115	524T3-84031	199	533A2-40201	94	534A3-82391	178
522A2-18591	113	524W3-92211	14	533A2-40211	94	534A3-82401	180
522A2-18591	115	524W5-12091	100	533A2-40402	73	534A3-82411	180
522A2-42001	22	524W5-12091	101	533A2-40502	73	534A3-82421	176
522A2-72111	176	524W5-12091	102	533A2-40552	73	534A3-82421	177
522A2-72111	177	524W5-13351	105	533A2-40552	73	534A3-82421	178
522A2-72111	178	52436-80701	90	533A2-42001	94	534A3-82421	179
522A2-72111	179	52436-80701	90	533A2-42021	94	534A3-82421	180
522A2-72111	180	52436-82101	78	533A2-42032	73	534A3-82431	178
522A2-82151	176	52436-82101	79	533A2-42042	73	534A3-82441	176
522A3-82441	174	52436-82101	85	533A2-42071	73	534A3-82441	178
522A3-82641	174	52436-82101	85	533A2-42101	73	534A3-82451	176
522A3-82841	174	52436-82111	78	533A2-42202	73	534A3-82451	178
522A3-83021	178	52436-82111	79	533A2-42202	73	534A3-82461	178
522A3-83041	174	52436-82111	85	533A2-42212	73	534A3-82471	178
522A3-83061	178	52436-82111	85	533A2-42212	73	534A3-82471	180
522A3-83061	180	52436-82121	78	534A0-60011	2	534A3-82481	178
522A3-83081	178	52436-82121	79	534A0-62001	2	534A3-82491	178
522A3-83221	178	52436-82121	85	534A0-62011	2	534A3-82501	178
522A3-83221	180	52436-82121	85	534A0-82101	14	534A3-82511	180
522A3-83241	174	52436-82151	82	534A2-40402	150	534A3-82521	180
522A3-83281	178	52672-72122	176	534A2-40502	151	534A3-82531	176

PARTS NUMBER INDEX

Part No.	Fig.No.	Part No.	Fig.No.	Part No.	Fig.No.	Part No.	Fig.No.
534A4-22001	104	534A9-22101	104	536G3-82011	176	539A2-42001	68
534A4-22011	104	534A9-22211	27	536G3-82011	178	539A2-42011	68
534A4-22101	104	534A9-22301	104	536G3-82021	178	539A2-60111	101
534A4-60202	150	534A9-92131	30	536G3-82031	178	539A2-60221	101
534A4-60302	151	534A9-92131	31	536G3-82041	178	539A2-60231	98
534A4-60402	152	534A9-92131	32	536G3-82041	180	539A2-60301	70
534A4-60502	153	534B3-80281	57	536G3-82051	178	539A2-60601	131
534A5-00401	106	534F1-64401	185	536G3-82061	178	539A2-62301	70
534A5-00411	106	534F1-64401	192	536G3-82071	178	539A2-62321	70
534A5-12321	105	534F1-64401	200	536G3-82081	180	539A2-72121	22
534A5-12331	105	534F1-64401	200	536G3-82091	180	539A2-80111	101
534A5-12571	106	534F1-64411	185	53651-12551	2	539A2-80151	101
534A5-13011	1	534F1-64411	192	53652-82011	176	539A2-80161	101
534A5-32311	144	534F1-64411	200	53652-82011	178	539A2-80172	99
534A5-32651	135	534F1-64411	200	53652-82352	176	539A2-80172	99
534A5-33001	40	534F2-74001	185	53652-82352	178	539A2-80182	99
534A6-42001	147	534F2-74001	192	53652-82401	176	539A2-80182	99
534A6-42201	147	534F2-74001	200	53652-82401	178	539A2-80192	99
534A6-42211	147	534F3-82001	86	53652-82541	176	539A2-80192	99
534A6-42221	147	534F3-82001	88	53652-82551	176	539A2-80202	99
534A6-42231	147	534F3-82001	90	53656-82001	84	539A2-80202	99
534A6-42241	147	534F3-82001	92	53657-42053	83	539A2-80221	101
534A6-42251	147	534F6-80171	81	53658-43001	196	539A2-80301	98
534A6-42261	147	534F6-80271	92	53658-43001	204	539A2-80371	101
534A6-42271	147	534F6-80402	80	53658-43011	196	539A2-80501	98
534A6-42281	147	534F6-80412	80	53658-43011	204	539A2-80571	101
534A6-42291	147	534F6-80422	80	53658-43021	196	539A2-82251	101
534A6-42301	147	534F6-83002	82	53658-43021	204	539A2-90201	97
534A6-42311	147	534F6-85001	81	53658-43031	196	539A2-90301	98
534A6-42321	147	534F7-40502	80	53658-43031	204	539A2-90401	98
534A6-42331	147	534F7-40502	80	53658-43041	196	539A3-72151	23
534A6-42341	147	534F7-52012	64	53658-43041	204	539A5-00111	100
534A6-42351	147	53456-82052	84	53675-54101	189	539A5-00121	100
534A6-42361	147	53456-82062	84	53675-54101	205	539A5-00131	100
534A6-42371	147	53457-42151	83	53675-55051	164	539A5-00141	100
534A6-42381	147	535C2-60401	132	53675-55051	165	539A5-00152	99
534A6-42391	147	535C8-92051	36	53675-55051	189	539A5-00152	99
534A6-42401	147	535H3-82261	122	53675-55051	205	539A5-00162	99
534A6-42411	147	535H3-82411	178	537A0-80302	14	539A5-00162	99
534A6-42421	147	535H3-82411	180	537A0-80302	15	539A5-00172	99
534A6-42431	147	535H3-82421	178	537A0-82001	14	539A5-00182	99
534A6-42441	147	535H3-82431	178	537A0-82001	15	539A5-00261	106
534A6-42451	147	535H3-82441	178	537A0-82011	14	539A5-00351	100
534A6-42472	147	535H3-82451	178	537A0-82011	15	539A5-00361	100
534A6-42482	147	535H3-82461	178	537A6-60302	5	539A5-00371	100
534A7-02001	22	535H3-82461	180	537A6-60302	6	539A5-00381	100
534A7-22101	38	535H3-82471	178	537B3-80002	54	539A5-00401	97
534A7-50101	42	535H3-82481	178	538G2-60202	110	539A5-00501	97
534A7-50301	45	535H3-82491	178	538S3-72001	124	539A5-00601	97
534A7-50401	45	535H3-82501	180	538S3-72001	125	539A5-00701	97
534A7-50501	45	535H3-82511	180	539A0-82201	12	539A5-10501	106
534A7-50601	46	536B6-60302	6	539A0-90111	100	539A5-12001	106
534A7-50601	47	536G2-82181	176	539A1-32001	105	539A5-12001	106
534A7-50601	48	536G2-82181	177	539A1-42201	33	539A5-12011	103
534A7-52301	45	536G2-82181	178	539A1-42201	34	539A5-12041	103
534A7-52401	45	536G2-82181	179	539A1-42201	35	539A5-12101	105
534A7-52501	45	536G2-82181	180	539A2-32001	50	539A5-30251	143
534A7-72001	21	536G2-82281	176	539A2-32001	62	539A5-30261	143
534A9-22001	104	536G3-82001	176	539A2-32041	50	539A5-30301	131
534A9-22011	104	536G3-82001	178	539A2-32041	62	539A5-30602	132

PARTS NUMBER INDEX

Part No.	Fig.No.	Part No.	Fig.No.	Part No.	Fig.No.	Part No.	Fig.No.
539A5-32091	143	539B3-72201	24	539F3-91311	193	542S6-52151	9
539A5-32201	135	539B3-82301	24	539F3-91321	193	542S6-52201	9
539A5-32301	143	539B6-92111	44	539F3-91331	193	54236-83011	87
539A5-32311	135	539B6-92211	44	539F3-91341	193	54236-83011	89
539A5-32361	30	539B7-52031	46	539F3-91351	193	54236-83011	91
539A5-32541	135	539B7-52031	47	539F3-91361	193	54236-83021	87
539A5-42351	133	539B7-52031	48	539F3-91371	193	54236-83021	89
539A5-92131	13	539C0-90051	101	539F3-91381	193	54236-83021	91
539A5-92141	13	539C0-90061	101	539F3-91401	201	54236-83031	87
539A5-92251	13	539C1-90101	102	539F3-91411	201	54236-83031	89
539A5-92261	13	539C1-90151	31	539F3-91421	201	54236-83031	91
539A5-92371	13	539C1-90211	102	539F3-91431	201	54456-80201	85
539A5-92441	16	539C1-90402	132	539F3-91441	201	54456-80211	85
539A6-22001	49	539C1-90502	14	539F3-91451	201	54456-80421	83
539A6-22011	49	539C1-90521	14	539F3-91461	201	54456-82201	80
539A6-22021	22	539C1-92301	134	539F3-91471	201	54456-82201	81
539A6-42101	132	539C1-92311	134	539F3-91481	201	54456-82224	80
539A6-42111	132	539C1-92401	134	539F3-91491	201	54456-82224	81
539A6-52051	8	539C1-92501	14	539F3-91501	201	54457-40201	84
539A6-52151	8	539C1-92541	134	539F5-92341	17	54458-42011	195
539A7-22061	38	539C1-92551	134	539F7-40401	79	54458-42011	203
539A7-22211	38	539F1-64001	184	539F7-40401	85	55592-82001	176
539A7-22513	38	539F1-64011	184	539F7-40411	85	55592-82001	177
539A7-22611	38	539F1-64101	191	539F7-40501	83	55592-82001	178
539A7-42001	77	539F1-64111	191	539F7-40511	88	55592-82001	179
539A7-42011	77	539F1-64201	199	539F7-40521	89	55592-82001	180
539A7-52001	46	539F1-64211	199	539F7-40601	79	55593-02371	162
539A7-52001	47	539F3-71001	184	539F7-40601	85	55593-62061	63
539A7-52001	48	539F3-71501	184	539F7-40611	85	55593-62551	197
539A7-52041	45	539F3-71601	184	539F7-40701	83	556C7-22001	38
539A7-52101	47	539F3-91001	186	539F7-40711	88	55792-52601	45
539A7-52101	48	539F3-91011	186	539F7-40721	89	55792-52611	45
539A7-52311	45	539F3-91021	186	539F7-42021	77	55792-52621	45
539A7-52411	45	539F3-91031	186	539F7-42031	77	55792-52641	45
539A7-52511	45	539F3-91041	186	539F7-42061	77	558A9-92001	29
539A7-62201	135	539F3-91051	186	539F7-42071	77	558A9-92001	30
539A7-72001	19	539F3-91061	186	539G3-72001	124	558A9-92001	32
539A7-72001	20	539F3-91071	186	539H6-52202	136	558A9-92001	46
539A8-22101	40	539F3-91081	186	539H6-52351	9	558A9-92001	48
539A8-22151	40	539F3-91091	186	542F0-80101	12	55812-42011	40
539A8-92111	33	539F3-91101	186	542F0-80201	12	55952-18021	113
539A8-92111	34	539F3-91111	186	542F0-80301	12	55952-18021	115
539A8-92111	35	539F3-91121	186	542F1-70301	12	55953-02032	178
539A8-92111	36	539F3-91131	186	542F3-72001	25	56110-63521	39
539A8-92251	36	539F3-91141	186	542F3-80101	144	57042-72091	28
539A8-92251	47	539F3-91151	186	542F3-80201	145	57045-52151	76
539A8-92251	47	539F3-91161	186	542F3-82001	144	571A3-82361	176
539A8-92251	48	539F3-91171	186	542F3-82001	145	571A3-82361	177
539A8-92251	48	539F3-91181	186	542F3-82011	144	571A3-82361	178
539A9-02001	37	539F3-91201	193	542F3-82011	145	571A3-82361	179
539A9-02011	37	539F3-91211	193	542F3-82021	144	571A3-82361	180
539A9-32001	106	539F3-91221	193	542F3-82021	145	571A6-82081	90
539A9-62001	182	539F3-91231	193	542F5-92001	17	577H3-72181	143
539A9-90201	131	539F3-91241	193	542F6-52001	8	577P3-74001	184
539A9-92101	29	539F3-91251	193	542G3-72001	26	577P3-74001	184
539A9-92201	132	539F3-91261	193	542P1-70101	12	577P3-74001	186
539A9-92301	21	539F3-91271	193	542P1-70201	12	577P3-74001	186
539A9-92351	21	539F3-91281	193	542S6-50101	9	577P3-74001	191
539B2-32201	24	539F3-91291	193	542S6-52011	9	577P3-74001	193
539B3-72151	24	539F3-91301	193	542S6-52051	9	577P3-74001	193

PARTS NUMBER INDEX

Part No.	Fig.No.	Part No.	Fig.No.	Part No.	Fig.No.	Part No.	Fig.No.
577P3-74001	199						
577P3-74001	201						
577P3-74001	201						
577P3-74001	201						
577P3-74011	184						
577P3-74011	186						
577P3-74011	191						
577P3-74011	193						
577P3-74011	199						
577P3-74011	201						
577P3-74011	201						
577P3-74021	204						
577P3-74031	204						
577T3-74061	204						
59595-55301	94						
62150-14321	205						
62150-14321	205						
62459-23371	187						
62459-23371	187						
62459-23371	194						
62459-23371	202						
63056-56501	82						
63110-18901	174						
63110-18901	199						
63110-18911	199						
63110-18921	174						
63110-18921	199						
63130-25614	150						
63130-25614	151						
63130-25614	152						
63130-25614	153						
639A0-10011	187						
639A0-10011	187						
639A0-10011	194						
639A0-10011	202						
639A0-10051	187						
639A0-10051	187						
639A0-10051	194						
639A0-10051	202						
80110-00628	68						
80430-00006	68						
89140-00006	68						
89140-00006	68						
89140-00006	68						
89140-00006	68						
89140-00006	113						
89140-00006	115						
93956-59279	21						

No.PF-42PA
2003年 12月 発行

TCM株式会社
本 社 大阪市西区京町堀1－15－10
発 行 TCMテクノ株式会社

ISSUED:DECEMBER,2003

TCM CORPORATION
INTERNATIONAL MARKETING DIVISION : 1-15-5, Nishi－shimbashi, Minato－ku, Tokyo
105－0003, Japan
FAX : Japan +81－3－35918152, 3－35918153

無断で転載・複製を禁ず
All rights reserved.

SA－0312001(H) Printed in Japan

TCM株式会社